Gabriel® HD

THE ORIGINAL

2023

TRUCK, TRAILER, AND BUS

SHOCKS

Gabriel.com

Table of Contents

New Part Numbers / Part Numbers Discontinued..... 2

Application and Numerical Listings
Specialty Shocks..... 3
Shocks for Heavy Duty Trucks, Trailers and Buses - Application Listing..... 6
Shocks for Heavy Duty Trucks, Trailers and Buses - Numerical Listing..... 473

Fleetline / GasSLX Interchange..... 496
Competitive and OEM Interchange..... 497

How to Determine the Correct Shock for Your Truck..... 600
Specifications by End Mount..... 611
Specifications by Part Number..... 628

Mounting Accessory Packages and Component Parts..... 645
Mounting Accessory Packages - Buyer's Guide..... 652

NEW PART NUMBERS IN THIS CATALOG
NOUVEAUX NUMÉROS DE PIÈCES DANS CE CATALOGUE
NUMERACION NUEVA DE PARTES EN ESTE CATALOGO

83397
83398
83243
85200
85670

PART NUMBERS TO BE DISCONTINUED ONCE INVENTORY IS GONE
LES NUMÉROS DE PIÈCE SERONT DISCONTINUÉS UNE FOIS L'INVENTAIRE ÉPUISÉ
NÚMEROS DE PIEZA QUE SE DESCONTINUARAN UNA VEZ QUE SE HAYA TERMINADO EL INVENTARIO

83065
83113
83118
83176
83180
85120
85180
85344
85351
89418

85098 *Supersede to 85061 when current supply exhausted*
85122 *Supersede to 83120 when current supply exhausted*
85312 *Supersede to 85733 when current supply exhausted*
85925 *Supersede to 85648 when current supply exhausted*

PART NUMBERS DROPPED FROM THIS CATALOG
NUMÉROS DE PIÈCES SUPPRIMÉS DE CE CATALOGUE
NUMERACION DE PARTES QUE NO APARECEN EN ESTE CATALOGO

83010
83067
83117
83217
85025
85042
85123
85377
85745
85907
85966
85969
85986
85998
89412

83177 *Superseded to G63622*
83178 *Superseded to G63623*
85926 *Superseded to 85656*
85999 *Superseded to 85929*

APPLICATION GUIDE - SPECIALITY

Year Año Année	Model Modelo Modèle	OEM #	Fleetline #
ADVANCE MIXER			
	Rear Discharge Mixers with Self - Steering Axle Shock	12111 ADV	646155
CHALLENGE			
	Cement Mixer	632147 632155	632147 646177
GRANNING SUSPENSION			
	Model L120 Self Steer Axle	701071-01	646155
HENDRICKSON TRAILER SUSPENSION SYSTEMS			
Auxiliary Liftable Steerable System (HL)			
	HLP Paralift	A-14496	646155
	HLU Paralift Ultra	A-14496	646155
HENDRICKSON TRUCK SUSPENSION SYSTEMS			
Dual Tire Steer Lift Axle			
	Tough Lift LK Series	A-14496	646155
INGERSALL MACHINE			
	700060-0 Axle Assy.	665472	665472
	Models with O.E.M. Number	665904	665472
KIMBLE MIXER CO			
	Rear Discharge Mixers with Self - Steering Axle Shock	OE10455	646155
LINK/HIGH-STEER			
	6000 Steering Stabilizer	632155	646177
	9000 Steering Stabilizer	1210-0007 1210-0009	665937 665937
	Models with O.E.M. Number	1210-0001 1210-0002 1210-0010 1210-0012 646168	646155 632147 646155 646155 646155
LONDON MIXER			
	Rear Discharge Mixers with Self - Steering Axle Shock	MB-37737-30	646155
MC NEILUS TRUCK & MAN.			
	Booster Axles	1170719 600-115994B	632147 632147
	Bridgemaster V models with Self - Steering Axle Shocks	600-188206	646155
	Models with O.E.M. Number	1473224 2034140 MTM 600-11599M	646155 646155 632147
	Pusher Axles	600-115994B	632147
OSHKOSH MOTORS			
	Models with O.E.M. Number	2034140	646177
PIERCE MANUFACTURING INC.			
	Models with O.E.M. Number	2034140	646177
REX MIXER			
	Rear Discharge Mixers with Self - Steering Axle Shock	102-13441-10	646155
REYCO SUSPENSION			
	L132 Steering Stabilizer	701071-01	665937
RIDEWELL CORPORATION			
	RLT-230	1310002	665937
	RSS-232	1317570B001	646155
	RSS-236/R	1310002 1310004	665937 665937

APPLICATION GUIDE - SPECIALITY

Year Año Année	Model Modelo Modèle	OEM #	Fleetline #
SAF HOLLAND			
	Self - Steering Axle Shocks	646201 90045331	646177 646155
Neway V-Steer II			
	Self - Steering Axle Shocks	632155	646177
SPRING VALLEY			
	SS120 Steering Stabilizer	632155	646177
	SS130L Steering Stabilizer	632155	646177
SUSPENSIONS INC.			
	LP11 Steerable Lift Axle	200188	646155
TEREX CORPORATION			
	Rear Discharge Mixers with Self - Steering Axle Shock	12111	646155
TUTHILL TECHNOLOGIES			
	Models with O.E.M. Number	66502	646155
VARIOUS			
Steering Stabilizer			
	Various Class 8 Trucks with Front Axle Rating of 10,000 lb to 20,000 lb	SC-2920	83176
WATSON & CHALIN MFG. INC.			
Self - Steering Axle Suspension Systems			
	LW5L-1100 SR	11418	646155
	Models with O.E.M. Number	17069	632147
	SL-2089 Steerable Lift Axle Suspension	11418	646155
	WCAL-1000 SST	11418	646155
	WCAL-1100 LR	11418	646155
	WCAL-1100 SR	11418	646155
	WCAL-1100 SRLP	11418	646155
	WCAL-1100 SSR	11418	646155
	WCHL-1100 FL	11418	646155
	WCHL-1100 HI-LIFT	11418	646155
WESTPORT AXLE CORP			
	Self - Steering Axle Shocks	143699-0185 646124	646177 646177

Shocks for Heavy Duty Trucks, Trailers and Buses

(Alphabetical Listing)

(Numerical Listing)

Amortiguadores Para Vehículos Pesados Camiones, Remolques Y Autobuses

(Lista alfabética)

(Listado numérico)

Amortisseurs Pour Poids Lourds Camions, Remorques et Autobus

(Liste alphabétique)

(Ordre numérique)

Gabriel® HD

THE ORIGINAL

APPLICATION GUIDE - TRUCKS, TRAILERS AND BUSES

Year Ano Année	Model Modelo Modle	OEM #		Front			Rear	
				Fleetline	GasSLX		Fleetline	GasSLX
ABC BUS								
	Additional O.E.M. Interchanges	12L572	−|−	85709				
		12L5114		...	...	−|−	85727	...
		12L-5-72	−|−	85709				
		12L-5-114		...	...	−|−	85727	...
		680323	o|o	85700				
		3166657	o|o	85700				
	Drive Axle	12J510		...	...		85733	...
		12J-5-10		...	...		85733	...
	Models with O.E.M. Number	12L588		...	...		85729	...
		12L-5-88		...	...		85729	...
		6243-13790	−|−	85708	...		...	...
		6243-14040	−|−	85708	...		...	...
		050134513	o|o	85732	...		...	...
		624313790	−|−	85708	...		...	...
		624314040	−|−	85708	...		...	...
ACF BRILL BUS								
	37R Models	.....	o|o	85736	...		...	...
	Additional O.E.M. Interchanges	610513	o|o	85307				
		631237	o|o	85308 or 89422				
		641521	o|o	85308 or 89422				
		649648	o|o	85308 or 89422				
		659129	o|o	85303	89422		...	...
		661732	o|o	83215				
		661733	o|o	83225				
		995891	o|o	85307				
	C-27 and C-31 City Bus	.....		...	...	o|o	85702	...
		.....	o|o	85736	...		...	...
	C-36 City Bus Serial #1051 and on	.....		...	...	o|o	85702	...
		.....	o|o	85736	...		...	...
	C-37M Models	.....		...	...	o|o	85702	...
		.....	o|o	85736	...		...	...
	C-44 City Bus and T-44 Trolley Bus	.....	o|o	85308	89422		...	...
	IC-41 Intercity Bus Serial #1088 and on	.....	o|o	85308	89422		...	...
	IC-41 Intercity Bus to Serial #1088	.....		...	...	o|o	85702	...
		.....	o|o	85736	...		...	...
ADVANCE MIXER								
	Advance Mixer part number	13424 ADV		...	...	o|o	83207	89407
		14626 ADV		...	...	o|o	83209	89414
		23458 ADV		...	...		83112	...
	Models with 20,000 lb Front Axle	13883	o|o	85334	...		...	...
		13883 ADV	o|o	85334	...		...	...
		85334	o|o	85334	...		...	...
		680087	o|o	85334	...		...	...
	Rear Discharge Mixers with Self - Steering Axle Shock	12111 ADV	o|o	646155				
ALLCO TRAILER								
	Dump Trailers with Watson & Chalin TA-5000-DB-19 Air Suspension	727602		...	...	o|o	83122	89406
AM GENERAL								
	Additional O.E.M. Interchanges	3166657	o|o	85700				
		4975501	o|o	85700				
		5565748	o|o	85700				
		5957136	o|o	85700				
		5969438	o|o	85700				
		5978712	o|o	85700				

APPLICATION GUIDE - TRUCKS, TRAILERS AND BUSES

Year Ano Année	Model Modelo Modle	OEM #		Front			Rear	
				Fleetline	GasSLX		Fleetline	GasSLX
AM GENERAL (CONT'D)								
	Additional O.E.M. Interchanges	5979574	O|O	85700				
		5982537	O|O	85700				
	Small Bus	5979484		...	...	O|O	85302	89420
ARVIN MERITOR								
ALL MODELS WITH								
	Models with Manufacturing Number	654958	O|O	83164	...		...	...
	Blue Bird Motor Home with IFS (37 Foot)	7805N1002	O|O	85329	...		...	...
		7805-N-1002	O|O	85329	...		...	...
		7805S1007	O|O	85329	...		...	...
		7805-S-1007	O|O	85329	...		...	...
	Models with Manufacturing Number	085009	–|O	85009	...		...	...
		085014		...	...	O|O	85014	...
		085321		...	...	O|O	85321	...
		89408		89408				
		89418		89418				
		89425		89425				
		89426		89426				
		89427		89427				
		89429		89429				
		89431		89431				
		89434		89434				
		89435		89435				
		89436		89436				
		89439		89439				
		89442		89442				
		89443		89443				
		89448		89448				
		89449		89449				
		89450		89450				
		89451		89451				
		89453		89453				
		89454		89454				
		89455		89455				
		89456		89456				
		89457		89457				
		89458		89458				
		89459		89459				
		89460		89460				
		89503		89503				
		654907		...	...	O|O	85000	89436
		665044		...	...	O|O	83209	89414
		665724		...	...	O|O	85000	89436
		665746		...	...	O|O	85000	89436
		665760		...	...	O|O	85045	...
		665769		...	...	O|O	85052	...
		665804		...	...	O|O	85939	...
		671091		...	...	–|–	85069	89455
		671092	O|O	85012	89413		...	...
		671507		...	...	O|O	87015	...
		671707		...	...	O|O	85323	89436
		680102	O|O	85712				
		680322		...	...	O|O	85704	...
		680331		...	...	O|O	85702	...
		680337		...	...	–|–	85708	...

APPLICATION GUIDE - TRUCKS, TRAILERS AND BUSES

Year Ano Année	Model Modelo Modle	OEM #		Front			Rear	
				Fleetline	GasSLX		Fleetline	GasSLX
ARVIN MERITOR (CONT'D)								
	Models with Manufacturing Number	680347	O|O	**85732**	...		...	...
		680464	O|O	**85005 or 89430**				
		680518	O|O	**85700**				
		680584		...	...	O|O	**85938**	...
		680671		...	...	–|–	**85708**	...
		695180	–|–	**85705**	89447		...	...
		695214		...	...	–|–	**85722**	...
		695348		...	...	O|O	**87018**	...
		727600	O|O	**89402**				
		727607	O|O	**83207 or 89407**				
		727609	O|O	**83209 or 89414**				
		727614	O|O	**83214**				
		727615	O|O	**83215**				
		727616	O|O	**83216**				
		727619	O|O	**83219**				
		727625	O|O	**83225**				
		727628		...	...	–|O	**83301**	...
		727630	O|O	**83303**	...		...	...
		727635	O|O	**83308**				
		727636	O|O	**83309**	...		...	...
		727639	O|O	**83312**	89409		...	...
		727641	O|O	**83314**	...		...	...
		727645	–|–	**83318**	...		...	...
		727671	–|–	**83613**				
		727672	O|O	**83242**				
		728601	O|O	**85001 or 89410**				
		728603		...	...	O|O	**85003**	89411
		728604	O|O	**85300 or 89419**				
		728606	O|O	**85302 or 89420**				
		728608	O|O	**85304**				
		728609	O|O	**85305**				
		728611	O|O	**85307**				
		728612	O|O	**85308**	89422		...	...
		728614		...	...	–|–	**85310**	89423
		728615		...	...	–|O	**85311**	89424
		728616		...	...	O|O	**85004**	...
		728617	O|O	**85005 or 89430**				
		728618	O|O	**85006**				
		728619		...	...	O|O	**85007**	...
		728621	–|O	**85009**	...		...	...
		728622		...	...	O|O	**85010**	...
		728624	O|O	**85012 or 89413**				
		728625	O|O	**85013 or 89414**				
		728626		...	...		**85312**	...
		728628		...	...	O|O	**85314**	89425
		728631	O|O	**85029**	...		...	...
		728632	O|O	**85030**	89440		...	...
		728635		...	...	–|–	**85318**	...
		728639		**85026**	...		...	...
		728640	–|–	**85027**	...		...	...
		728800	–|O	**85711**				
		728806	O|O	**85736**				
		728812	–|–	**85705**	89447		...	...
AUTOCAR LLC.								
ADDITIONAL APPLICATIONS								
	A42B, A42F, A64B A64F Models	03-1106460	O|O	**85005**	89430		...	...

APPLICATION GUIDE - TRUCKS, TRAILERS AND BUSES

Year Ano Année	Model Modelo Modle	OEM #		Front			Rear	
				Fleetline	GasSLX		Fleetline	GasSLX

AUTOCAR LLC. (CONT'D)

ADDITIONAL APPLICATIONS (cont'd)

	A42B, A42F, A64B A64F Models	28R010	○|○	**83216**	...		...	...
		031106460	○|○	**85005**	**89430**		...	...
	ACM, ACL Models	35901-3201		...	...	○|○	**85024**	...
		37301-3201	–|–	**85027**	...		...	...
		359013201		...	...	○|○	**85024**	...
		373013201	–|–	**85027**	...		...	...
	C65T, C70T, C70TS, C90, C75, C90T, DC74, DC75, DC102, DC104 Models	.....	○|○	**83216**	...		...	...
	DC87T, DC9364 From Feb. 1971	.....	○|○	**83122**	**89406**		...	...
	Models with Air Suspension and O.E.M. Number	8026658		...	...	○|○	**85046**	**89434**
		8071524		...	...	○|○	**85024**	...
	Models with Hendrickson HTS 210, HTS 230 and HTS 260 Suspensions	60665-025		...	...	○|○	**85036**	**89405**
		60665-025L		...	...	○|○	**85036**	**89405**
		60665025		...	...	○|○	**85036**	**89405**
		60665025L		...	...	○|○	**85036**	**89405**
	Models with O.E.M. Number	28CFG910	○|○	**83216**	...		...	...
		28CFG910Z	○|○	**83216**	...		...	...
		28CFG-910	○|○	**83216**	...		...	...
		28CFG-910Z	○|○	**83216**	...		...	...
		37301-3202		**85026**	...		...	...
		660186	○|○	**83216**	...		...	...
		849246	○|○	**83216**	...		...	...
		1011839	○|○	**83216**	...		...	...
		373013202		**85026**	...		...	...

XPEDITOR

09-12	Models with 20,000 lb Front Axle	3946210	–|–	**83103**	...		...	...
08-20	4 X 2 Models with Hendrickson Primaax EX 232 Air Suspensions with 8 1/2" to 10" Ride Height	60657-003		...	...	○|○	**85072**	...
		60657-003L		...	...	○|○	**85072**	...
		60657003		...	...	○|○	**85072**	...
		60657003L		...	...	○|○	**85072**	...
08-20	8 X 4 Models with Chalmers 800 Series - 46K Tandem Truck Suspensins (HD Shock Kit with High Mounts)	800670		...	...	○|○	**85060**	...
08-20	8 X 4 Models with Chalmers 800 Series - 46K Tandem Truck Suspensins (HD Shock Kit with Low Mounts)	800781		...	...	○|○	**85314**	**89425**
16-21	Models with 20,000 lb Front Axle	A3730008-001	○|○	**85086**	...		...	...
		A3730008001	○|○	**85086**	...		...	...
08-22	6 X 4 Models with Hendrickson HMX 400/460 Haulmax with 16.5" Saddle	60680-004		...	...		**83143**	...
		60680-004L		...	...		**83143**	...
		60680004		...	...		**83143**	...
		60680004L		...	...		**83143**	...
08-22	6 X 4 Models with Hendrickson HMX 400/460 Haulmax with 17.5" & 18.5" Saddle	60680-005		...	...		**83142**	...
		60680-005L		...	...		**83142**	...
		60680005		...	...		**83142**	...
		60680005L		...	...		**83142**	...
08-22	6 X 4 Models with Hendrickson HN - 522	60680-003		...	...		**83112**	...
		60680-003L		...	...		**83112**	...
		60680003		...	...		**83112**	...
		60680003L		...	...		**83112**	...
08-22	6 X 4 Models with Hendrickson Primaax EX 462 Air Suspensions with 8 1/2" to 10" Ride Height	60657-003		...	...	○|○	**85072**	...
		60657-003L		...	...	○|○	**85072**	...
		60657003		...	...	○|○	**85072**	...
		60657003L		...	...	○|○	**85072**	...
08-22	8 X 4 Models with Hendrickson Primaax EX 462 Air Suspensions with 8 1/2" to 10" Ride Height	60657-003		...	...	○|○	**85072**	...

APPLICATION GUIDE - TRUCKS, TRAILERS AND BUSES

Year Ano Année	Model Modelo Modle	OEM #		Front			Rear	
				Fleetline	GasSLX		Fleetline	GasSLX
AUTOCAR LLC. (CONT'D)								
XPEDITOR (cont'd)								
08-22	8 X 4 Models with Hendrickson Primaax EX 462 Air Suspensions with 8 1/2" to 10" Ride Height	60657-003L		...	...	O|O	85072	...
		60657003		...	...	O|O	85072	...
		60657003L		...	...	O|O	85072	...
08-22	Models with Hendrickson Primaax EX 462 Air Suspensions with 12 1/2" - 14 3/8" - 15 1/2" Ride Height	60665-011		...	...	O|O	85967	...
		60665011		...	...	O|O	85967	...
XPERT								
14-19	4 X 2 Models (CLASS 8) with Hendrickson EX-262 Air Suspensions	60665-013		...	...	O|O	85965	...
		60665013		...	...	O|O	85965	...
14-20	6 X 4 Models with Hendrickson Primaax EX 462 Air Suspensions with 8 1/2" to 10" Ride Height	60657-003		...	...	O|O	85072	...
		60657-003L		...	...	O|O	85072	...
		60657003		...	...	O|O	85072	...
		60657003L		...	...	O|O	85072	...
14-20	Models with Hendrickson Primaax EX 462 Air Suspensions with 12 1/2" - 14 3/8" - 15 1/2" Ride Height	60665-011		...	...	O|O	85967	...
		60665011		...	...	O|O	85967	...
14-21	4 X 2 Models with Hendrickson HAS-210 or HAS-230 Air Suspensions	60670-005		...	...	O|O	83137	...
		60670-005L		...	...	O|O	83137	...
		60675-003		...	...	O|O	85976	...
		60675-003L		...	...	O|O	85976	...
		60670005		...	...	O|O	83137	...
		60670005L		...	...	O|O	83137	...
		60675003		...	...	O|O	85976	...
		60675003L		...	...	O|O	85976	...
14-22	6 X 4 Models with Hendrickson HMX 400 Haulmax with 16.5" Saddle	60680-004		...	...		83143	...
		60680-004L		...	...		83143	...
		60680004		...	...		83143	...
		60680004L		...	...		83143	...
14-22	6 X 4 Models with Hendrickson HMX 400 Haulmax with 17.5" & 18.5" Saddle	60680-005		...	...		83142	...
		60680-005L		...	...		83142	...
		60680005		...	...		83142	...
		60680005L		...	...		83142	...
2012	4 X 2 Models (CLASS 8) with Hendrickson EX-262 Air Suspensions	60665-013		...	...	O|O	85965	...
		60665013		...	...	O|O	85965	...
2012	4 X 2 Models with Hendrickson HAS-210 or HAS-230 Air Suspensions	60670-005		...	...	O|O	83137	...
		60670-005L		...	...	O|O	83137	...
		60675-003		...	...	O|O	85976	...
		60675-003L		...	...	O|O	85976	...
		60670005		...	...	O|O	83137	...
		60670005L		...	...	O|O	83137	...
		60675003		...	...	O|O	85976	...
		60675003L		...	...	O|O	85976	...
2012	6 X 4 Models with Hendrickson HMX 400 Haulmax with 16.5" Saddle	60680-004		...	...		83143	...
		60680-004L		...	...		83143	...
		60680004		...	...		83143	...
		60680004L		...	...		83143	...
2012	6 X 4 Models with Hendrickson HMX 400 Haulmax with 17.5" & 18.5" Saddle	60680-005		...	...		83142	...
		60680-005L		...	...		83142	...
		60680005		...	...		83142	...
		60680005L		...	...		83142	...
2012	6 X 4 Models with Hendrickson Primaax EX 462 Air Suspensions with 8 1/2" to 10" Ride Height	60657-003		...	...	O|O	85072	...

APPLICATION GUIDE - TRUCKS, TRAILERS AND BUSES

Year Ano Année	Model Modelo Modle	OEM #		Front			Rear	
				Fleetline	GasSLX		Fleetline	GasSLX
AUTOCAR LLC. (CONT'D)								
XPERT (cont'd)								
2012	6 X 4 Models with Hendrickson Primaax EX 462 Air Suspensions with 8 1/2" to 10" Ride Height	60657-003L		...	...	○|○	85072	...
		60657003		...	...	○|○	85072	...
		60657003L		...	...	○|○	85072	...
2012	Models with Hendrickson Primaax EX 462 Air Suspensions with 12 1/2" - 14 3/8" - 15 1/2" Ride Height	60665-011		...	...	○|○	85967	...
		60665011		...	...	○|○	85967	...
2020	4 X 2 Models (CLASS 7 & 8) Models with Hendrickson HTS 210 Suspension	60665-025		...	...	○|○	85036	89405
		60665-025L		...	...	○|○	85036	89405
		60665025		...	...	○|○	85036	89405
		60665025L		...	...	○|○	85036	89405
2013	4 X 2 Models (CLASS 8) with Hendrickson EX-262 Air Suspensions	60665-013		...	...	○|○	85965	...
		60665013		...	...	○|○	85965	...
2013	4 X 2 Models with Hendrickson HAS-210 or HAS-230 Air Suspensions	60670-005		...	...	○|○	83137	...
		60670-005L		...	...	○|○	83137	...
		60675-003		...	...	○|○	85976	...
		60675-003L		...	...	○|○	85976	...
		60670005		...	...	○|○	83137	...
		60670005L		...	...	○|○	83137	...
		60675003		...	...	○|○	85976	...
		60675003L		...	...	○|○	85976	...
2013	6 X 4 Models with Hendrickson HMX 400 Haulmax with 16.5" Saddle	60680-004		...	...		83143	...
		60680-004L		...	...		83143	...
		60680004		...	...		83143	...
		60680004L		...	...		83143	...
2013	6 X 4 Models with Hendrickson HMX 400 Haulmax with 17.5" & 18.5" Saddle	60680-005		...	...		83142	...
		60680-005L		...	...		83142	...
		60680005		...	...		83142	...
		60680005L		...	...		83142	...
2013	6 X 4 Models with Hendrickson Primaax EX 462 Air Suspensions Standard with 12 1/2" - 14 3/8" - 15 1/2" Ride Height	60665-011		...	...	○|○	85967	...
		60665011		...	...	○|○	85967	...
2013	Models with Hendrickson Primaax EX 462 Air Suspensions (Standard with 8 1/2" to 10" Ride Height)	60657-003		...	...	○|○	85072	...
		60657-003L		...	...	○|○	85072	...
		60657003		...	...	○|○	85072	...
		60657003L		...	...	○|○	85072	...
2022	6 X 4 Models with Hendrickson HMX 400 Haulmax with 16.5" Saddle	60680-004		...	...		83143	...
		60680-004L		...	...		83143	...
		60680004		...	...		83143	...
		60680004L		...	...		83143	...
2022	6 X 4 Models with Hendrickson HMX 400 Haulmax with 17.5" & 18.5" Saddle	60680-005		...	...		83142	...
		60680-005L		...	...		83142	...
		60680005		...	...		83142	...
		60680005L		...	...		83142	...
XSPOTTER OFF ROAD								
10-21	6 X 4 Off-Road Terminal Tractors with Hendrickson HN - 462	60680-003		...	...		83112	...
		60680-003L		...	...		83112	...
		60680003		...	...		83112	...
		60680003L		...	...		83112	...
BATCO								
	Models with O.E.M. Number	1083203	○|○	83203 or 89436				

APPLICATION GUIDE - TRUCKS, TRAILERS AND BUSES

Year Ano Année	Model Modelo Modle	OEM #		Front			Rear	
				Fleetline	GasSLX		Fleetline	GasSLX
BATCO (CONT'D)								
	Models with O.E.M. Number	1083204	O|O	83204				
		1083207	O|O	83207 or 89407				
		1083209	O|O	83209 or 89414				
		1083225	O|O	83225				
		1083310	O|O	83221				
		1083317	–|O	83317				
		1085003	O|O	85003 or 89411				
		1085005	O|O	85005 or 89430				
		1085007	O|O	85007				
		1085300	O|O	85300 or 89419				
		1085301	O|O	85301				
		1085305	O|O	85305				
		1085308	O|O	85308 or 89422				
		1085311	–|O	85311 or 89424				
		1087001	O|O	85734				
		1087006	O|O	85736				
BECK BUS								
	Deck and 1/2 Bus - Spring Suspension	.....	O|O	85307	...		...	...
	Deck and 1/2 Bus - Trailing Wheel	.....		...	...	O|O	85301	...
	Deck and 1/2 Bus with Air Suspension	.....	O|O	85304	...		...	...
	Luxury Liner Bus - Spring Suspension	.....	O|O	85307	...		...	...
	Mainliner with Air Suspension	.....	O|O	85304	...		...	...
	Models with O.E.M. Number	14QK140	O|O	85304	...		...	...
		14QK2102		...	...	O|O	85304	...
		14QK-140	O|O	85304	...		...	...
		14QK-2102		...	...	O|O	85304	...
BENSON TRUCK BODIES INC.								
	Models with Hendrickson Intrax Air Suspension	A20002		...	...	O|O	85000	89436
		A-20002		...	...	O|O	85000	89436
	Models with Neway Air Suspension	90044089		...	...	O|O	83124	89407
BERING TRUCK CORP.								
	HD80TT Models with Hendrickson HAS-400 Air Suspension	47902-24		...	...	O|O	83137	...
		4790224		...	...	O|O	83137	...
	Models with Hendrickson HAS-230 Air Suspension	47902-24		...	...	O|O	83137	...
		4790224		...	...	O|O	83137	...
BERKSHIRE COACH								
ULTRA 24								
	Coaches with Ford E350 Chassis	ASH1154	–|O	G63622	...		...	...
	Coaches with Ford E350 Chassis To 2022	ASH1136		...	...	–|O	G63623	...
	Coaches with Ford E450 Chassis	ASH-1154	–|O	G63622	...		...	...
	Coaches with Ford E450 Chassis To 2022	ASH1136		...	...	–|O	G63623	...
ULTRA 28								
	Coaches with Ford E350 Chassis	ASH-1154	–|O	G63622	...		...	...
	Coaches with Ford E350 Chassis To 2022	ASH1136		...	...	–|O	G63623	...
	Coaches with Ford E450 Chassis	ASH1154	–|O	G63622	...		...	...
	Coaches with Ford E450 Chassis To 2022	ASH1136		...	...	–|O	G63623	...
ULTRA 28 COACH								
17-20	with Ford E450 Chassis	ASH1136		...	...	–|O	G63623	...

Year Ano Année	Model Modelo Modle	OEM #		Front			Rear	
				Fleetline	GasSLX		Fleetline	GasSLX
BERKSHIRE COACH (CONT'D)								
ULTRA 28 COACH (cont'd)								
17-20	with Ford E450 Chassis	ASH1154	−|○	**G63622**	...		...	...
		ASH-1136		...	...	−|○	**G63623**	...
		ASH-1154	−|○	**G63622**	...		...	...
21-22	with Ford E450 Chassis	ASH1136		...	...	−|○	**G63623**	...
		ASH-1136		...	...	−|○	**G63623**	...
BLUE BIRD								
ADDITIONAL APPLICATIONS								
	Buses with 3/4" Mounting Pins	2021459	○|○	**85012**	89413		...	...
	Buses with 35" Chassis	90-1968	○|○	**85712**	...		...	...
		303-1350628	○|○	**85712**	...		...	...
		901968	○|○	**85712**	...		...	...
		3031350628	○|○	**85712**	...		...	...
	Buses with Flat Leaf Rear Spring Suspensions (8,200 lb to 10,400 lb)	1707405		...	...	○|○	**85005**	89430
	Buses with Neway Air Suspensions with O.E.M. Number	1526417		...	...	○|○	**85052**	...
		90044448		...	...	○|○	**85051**	...
		90044915		...	...	○|○	**83127**	...
		90045083		...	...	○|○	**85910**	...
	Buses with Reyco Air Suspension	1668722	○|○	**85030**	89440		...	...
		1668730		...	...	○|○	**85013**	89414
		1722222		...	...	○|○	**85013**	89414
	City Bird Buses with 1 " Mounting Pins	300-0614966	○|○	**85307**	...		...	...
		300-0614974		...	...	○|○	**85304**	...
		609180		...	...	○|○	**85304**	...
		614958	○|○	**85307**	...		...	...
		00614966	○|○	**85307**	...		...	...
		3000614966	○|○	**85307**	...		...	...
		3000614974		...	...	○|○	**85304**	...
	Low Floor Bus Models with O.E.M. Number	0075916	○|○	**85086**	...		...	...
		680667		...	...	−|−	**89447**	...
		4759272		...	...	−|−	**89447**	...
		4760958	○|○	**85086**	...		...	...
	Models with O.E.M. Number	300-1316546		...	...	○|○	**85006**	...
		0020326		...	...	○|○	**85976**	...
		65992-004	○|○	**85106**	...		...	...
		00119798	○|○	**85106**	...		...	...
		614974	○|○	**85304**	...		...	...
		680783	○|○	**85304**	...		...	...
		65992004	○|○	**85106**	...		...	...
		3001316546		...	...	○|○	**85006**	...
	Motor Home with IFS (37 Foot)	7805N1002	○|○	**85329**	...		...	...
		7805-N-1002	○|○	**85329**	...		...	...
		7805S1007	○|○	**85329**	...		...	...
		7805-S-1007	○|○	**85329**	...		...	...
	WanderLodge	90-1968-SP1	○|○	**85712**	...		...	...
		901968SP1	○|○	**85712**	...		...	...
		01722214		...	...	○|○	**85030**	89440
		1750793		...	...	○|○	**85712**	...
	WanderLodge LX, LXI - Models	90-1951-SP1		...	...	○|○	**85734**	...
		901951SP1		...	...	○|○	**85734**	...
ADDITIONAL O.E.M. INTERCHANGES								
	Models with O.E.M. Number	23106-01		...	...	○|○	**89430**	...

BLUE BIRD (CONT'D)

ADDITIONAL O.E.M. INTERCHANGES (cont'd)

Year Ano Année	Model Modelo Modle	OEM #		Front Fleetline	Front GasSLX		Rear Fleetline	Rear GasSLX
	Models with O.E.M. Number	2310601		...	...	O|O	89430	...

ALL AMERICAN FE

98-15	Buses with Hendrickson Parasteer Suspensions	0015222	O|O	85919	...		...	...
		0040015	O|O	85919	...		...	...
		59483-000	O|O	85919	...		...	...
		60665-005	O|O	85919	...		...	...
		60665-005L	O|O	85919	...		...	...
		60998-002	O|O	85919	...		...	...
		60998-002L	O|O	85919	...		...	...
		59483000	O|O	85919	...		...	...
		60665005	O|O	85919	...		...	...
		60665005L	O|O	85919	...		...	...
		60998002	O|O	85919	...		...	...
		60998002L	O|O	85919	...		...	...
		481700131438	O|O	85919	...		...	...
06-19	Buses with Comfort Air Suspensions	60998-001		...	...	O|O	85006	...
		60998-003		...	...	O|O	85006	...
		00085991		...	...	O|O	85006	...
		60998001		...	...	O|O	85006	...
		60998003		...	...	O|O	85006	...
		471700000428		...	...	O|O	85006	...
10-19	Buses with Hendrickson Softek Suspension (13,200 lb - 14,600 lb Capacity)	58913-010	O|O	85106	...		...	...
		58913-010L	O|O	85106	...		...	...
		0106303	O|O	85106	...		...	...
		58913010	O|O	85106	...		...	...
		58913010L	O|O	85106	...		...	...
		471700002919	O|O	85106	...		...	...
05-21	Buses with Leaf Spring Rear Suspension	0088035		...	...	O|O	85090	...
		471700000464		...	...	O|O	85090	...
06-21	Buses with Hendrickson Airtek Front Air Suspension (10,000 lb Capacity)	58913-009	O|O	85959	...		...	...
		58913-009L	O|O	85959	...		...	...
		58913009	O|O	85959	...		...	...
		58913009L	O|O	85959	...		...	...
06-21	Buses with Hendrickson Airtek Front Air Suspension (13, 200 to 14,600 lb Capacity)	58913-011	O|O	85959	...		...	...
		58913-011L	O|O	85959	...		...	...
		58913011	O|O	85959	...		...	...
		58913011L	O|O	85959	...		...	...
06-21	Buses with Hendrickson Softek Suspension (8,500 lb - 10,000 lb Capacity)	58913-009	O|O	85959	...		...	...
		58913-009L	O|O	85959	...		...	...
		58913009	O|O	85959	...		...	...
		58913009L	O|O	85959	...		...	...
00-22	Models with Hendrickson HAS-210 or HAS-230 Air Suspensions	0014985		...	...	O|O	83137	...
		59057-001		...	...	O|O	83137	...
		060665-003		...	...	O|O	83137	...
		59057001		...	...	O|O	83137	...
		60665003		...	...	O|O	83137	...

ALL AMERICAN RE

98-15	Buses with Hendrickson Parasteer Suspensions	0015222	O|O	85919	...		...	...
		0040015	O|O	85919	...		...	...
		59483-000	O|O	85919	...		...	...
		60665-005	O|O	85919	...		...	...

APPLICATION GUIDE - TRUCKS, TRAILERS AND BUSES

Year Ano Année	Model Modelo Modle	OEM #		Front			Rear	
				Fleetline	GasSLX		Fleetline	GasSLX

BLUE BIRD (CONT'D)

ALL AMERICAN RE (cont'd)

98-15	Buses with Hendrickson Parasteer Suspensions	60665-005L	O|O	**85919**	...		...	...
		60998-002	O|O	**85919**	...		...	...
		60998-002L	O|O	**85919**	...		...	...
		59483000	O|O	**85919**	...		...	...
		60665005	O|O	**85919**	...		...	...
		60665005L	O|O	**85919**	...		...	...
		60998002	O|O	**85919**	...		...	...
		60998002L	O|O	**85919**	...		...	...
		481700131438	O|O	**85919**	...		...	...
06-19	Buses with Comfort Air Suspensions	60998-001		...	...	O|O	**85006**	...
		60998-003		...	...	O|O	**85006**	...
		00085991		...	...	O|O	**85006**	...
		60998001		...	...	O|O	**85006**	...
		60998003		...	...	O|O	**85006**	...
		471700000428		...	...	O|O	**85006**	...
10-19	Buses with Hendrickson Softek Suspension (13,200 lb - 14,600 lb Capacity)	58913-010	O|O	**85106**	...		...	...
		58913-010L	O|O	**85106**	...		...	...
		0106303	O|O	**85106**	...		...	...
		58913010	O|O	**85106**	...		...	...
		58913010L	O|O	**85106**	...		...	...
		471700002919	O|O	**85106**	...		...	...
05-21	Buses with Leaf Spring Rear Suspension	0088035		...	...	O|O	**85090**	...
		471700000464		...	...	O|O	**85090**	...
06-21	Buses with Hendrickson Airtek Front Air Suspension (10,000 lb Capacity)	58913-009	O|O	**85959**	...		...	...
		58913-009L	O|O	**85959**	...		...	...
		58913009	O|O	**85959**	...		...	...
		58913009L	O|O	**85959**	...		...	...
06-21	Buses with Hendrickson Airtek Front Air Suspension (13, 200 to 14,600 lb Capacity)	58913-011	O|O	**85959**	...		...	...
		58913-011L	O|O	**85959**	...		...	...
		58913011	O|O	**85959**	...		...	...
		58913011L	O|O	**85959**	...		...	...
06-21	Buses with Hendrickson Softek Suspension (8,500 lb - 10,000 lb Capacity)	58913-009	O|O	**85959**	...		...	...
		58913-009L	O|O	**85959**	...		...	...
		58913009	O|O	**85959**	...		...	...
		58913009L	O|O	**85959**	...		...	...
00-22	Models with Hendrickson HAS-210 or HAS-230 Air Suspensions	0014985		...	...	O|O	**83137**	...
		59057-001		...	...	O|O	**83137**	...
		060665-003		...	...	O|O	**83137**	...
		59057001		...	...	O|O	**83137**	...
		60665003		...	...	O|O	**83137**	...

ALL AMERICAN SERIES (FE & RE MODELS)

	Buses with 13,200 lb, 2-Leaf Parabolic Springs	AMS65109	O|O	**85058**	**89431**		...	...
	Buses with 19,000 lb - 21,000 lb - 2 Stage Leaf Springs	AMS65110		...	...	O|O	**85005**	**89430**
	Buses with O.E.M. Number	00110808	O|O	**83124**	**89407**		...	...
		0823054	O|O	**85304**	...		...	...
	FE Models School Bus (Front Engine)	0014605		...	...	O|O	**85036**	**89405**
		59057-002		...	...	O|O	**85036**	**89405**
		59057002		...	...	O|O	**85036**	**89405**
	RE Models School Bus (Rear Engine) with 1 " Mounting Pins	300-0614966	O|O	**85307**	...		...	...
		300-0614974		...	...	O|O	**85304**	...
		609180		...	...	O|O	**85304**	...
		614958	O|O	**85307**	...		...	...

Year Ano Année	Model Modelo Modle	OEM #		Front			Rear	
				Fleetline	GasSLX		Fleetline	GasSLX
BLUE BIRD (CONT'D)								
ALL AMERICAN SERIES (FE & RE MODELS) (cont'd)								
	RE Models School Bus (Rear Engine) with 1 " Mounting Pins	3000614966	O|O	**85307**	...		...	...
		3000614974		...	...	O|O	**85304**	...
D3 SERIES (FE & RE MODELS)								
10-13	Buses with Comfort Air Suspensions	60998-001		...	...	O|O	**85006**	...
		60998-003		...	...	O|O	**85006**	...
		00085991		...	...	O|O	**85006**	...
		60998001		...	...	O|O	**85006**	...
		60998003		...	...	O|O	**85006**	...
		471700000428		...	...	O|O	**85006**	...
10-13	Buses with Hendrickson Airtek Front Air Suspension	00110808	O|O	**83124**	**89407**		...	...
10-13	Buses with Hendrickson Airtek Front Air Suspension (13, 200 to 14,600 lb Capacity)	58913-011	O|O	**85959**	...		...	...
		58913-011L	O|O	**85959**	...		...	...
		58913011	O|O	**85959**	...		...	...
		58913011L	O|O	**85959**	...		...	...
10-13	Buses with Hendrickson Softek Suspension (13,200 lb - 14,600 lb Capacity)	58913-010	O|O	**85106**	...		...	...
		58913-010L	O|O	**85106**	...		...	...
		0106303	O|O	**85106**	...		...	...
		58913010	O|O	**85106**	...		...	...
		58913010L	O|O	**85106**	...		...	...
		471700002919	O|O	**85106**	...		...	...
10-13	Buses with Leaf Spring Rear Suspension	0088035		...	...	O|O	**85090**	...
		471700000464		...	...	O|O	**85090**	...
MICROBIRD TYPE A SCHOOL BUS								
92-20	Models with Ford E350 or E450 Chassis	8C2Z18124D	−|O	**G63622**	...		...	...
		8C2Z18125D		...	...	−|O	**G63623**	...
		8C2Z-18124-D	−|O	**G63622**	...		...	...
		8C2Z-18125-D		...	...	−|O	**G63623**	...
		8C24-18045-DA	−|O	**G63622**	...		...	...
		8C24-18080-DB		...	...	−|O	**G63623**	...
		8C2418045DA	−|O	**G63622**	...		...	...
		8C2418080DB		...	...	−|O	**G63623**	...
		ASH1136		...	...	−|O	**G63623**	...
		ASH1154	−|O	**G63622**	...		...	...
		ASH-1136		...	...	−|O	**G63623**	...
		ASH-1154	−|O	**G63622**	...		...	...
		AT163G	−|O	**G63622**	...		...	...
		AT164G		...	...	−|O	**G63623**	...
		AT-163G	−|O	**G63622**	...		...	...
		AT-164G		...	...	−|O	**G63623**	...
	Additional O.E.M. Interchanges	90-1813		...	...	O|O	**85712**	...
		300-0823047	O|O	**85736**				
		300-0823054	O|O	**85304**				
		300-09612284	O|O	**85734**				
		7805M1001	O|O	**85919**				
		7805-M-1001	O|O	**85919**				
		00020317		...	...	O|O	**85036**	**89405**
		60665-004		...	...	O|O	**85036**	**89405**
		70317	O|O	**89402**				
		70397	O|O	**85006**				
		87001-01A		...	...	O|O	**85734**	...
		0523047	O|O	**85736**				

APPLICATION GUIDE - TRUCKS, TRAILERS AND BUSES

Year Ano Année	Model Modelo Modle	OEM #		Front			Rear	
				Fleetline	GasSLX		Fleetline	GasSLX
BLUE BIRD (CONT'D)								
	Additional O.E.M. Interchanges	671933	○|○	**85919**				
		680102	○|○	**85712**				
		680155	○|○	**85712**				
		901813		...	...	○|○	**85712**	...
		1217934	○|○	**85304**				
		1962422	○|○	**85304**				
		1962430	○|○	**83207 or 89407**				
		8700101A		...	...	○|○	**85734**	...
		3000823047	○|○	**85736**				
		3000823054	○|○	**85304**				
		30009612284	○|○	**85734**				
		A4890		...	...	○|○	**85712**	...
		A-4890		...	...	○|○	**85712**	...
TC 2000 BUS, TC/2000 FE SERIES								
	Buses with Ridewell Front Suspension Option #4540	300-1317767	○|○	**85029**	...		...	...
		1004167	○|○	**85712**	...		...	...
		1317767	○|○	**85029**	...		...	...
		1667831	○|○	**85029**	...		...	...
		3001317767	○|○	**85029**	...		...	...
		AMS65119	○|○	**85029**	...		...	...
	Buses with Ridewell Rear Suspension Option #4540	305-0961284		...	...	○|○	**85734**	...
		1316546		...	...	○|○	**85006**	...
		1658533		...	...	○|○	**85010**	...
		3050961284		...	...	○|○	**85734**	...
	Buses with Standard Flat Leaf Rear Springs	1746163		...	...	○|○	**85006**	...
VISION SCHOOL BUS								
04-19	Buses with Comfort Air Suspensions	60998-001		...	...	○|○	**85006**	...
		60998-003		...	...	○|○	**85006**	...
		00085991		...	...	○|○	**85006**	...
		60998001		...	...	○|○	**85006**	...
		60998003		...	...	○|○	**85006**	...
		471700000428		...	...	○|○	**85006**	...
		471700131545		...	...	○|○	**85006**	...
10-19	Buses with Hendrickson Softek Suspension (13,200 lb - 14,600 lb Capacity)	58913-010	○|○	**85106**	...		...	...
		58913-010L	○|○	**85106**	...		...	...
		0106303	○|○	**85106**	...		...	...
		58913010	○|○	**85106**	...		...	...
		58913010L	○|○	**85106**	...		...	...
		471700002919	○|○	**85106**	...		...	...
04-21	Buses with Hendrickson Airtek Front Air Suspension (10,000 lb Capacity)	0055017	○|○	**85959**	...		...	...
		58913-008	○|○	**85959**	...		...	...
		58913-008L	○|○	**85959**	...		...	...
		58913-009	○|○	**85959**	...		...	...
		58913-009L	○|○	**85959**	...		...	...
		65992-003	○|○	**85959**	...		...	...
		0085990	○|○	**85959**	...		...	...
		00119797	○|○	**85959**	...		...	...
		58913008	○|○	**85959**	...		...	...
		58913008L	○|○	**85959**	...		...	...
		58913009	○|○	**85959**	...		...	...
		58913009L	○|○	**85959**	...		...	...
		65992003	○|○	**85959**	...		...	...
		471700000456	○|○	**85959**	...		...	...
04-21	Buses with Hendrickson Airtek Front Air Suspension (13, 200 to 14,600 lb Capacity)	58913-011	○|○	**85959**	...		...	...

APPLICATION GUIDE - TRUCKS, TRAILERS AND BUSES

Year Ano Année	Model Modelo Modle	OEM #		Front			Rear	
				Fleetline	GasSLX		Fleetline	GasSLX
BLUE BIRD (CONT'D)								
VISION SCHOOL BUS (cont'd)								
04-21	Buses with Hendrickson Airtek Front Air Suspension (13, 200 to 14,600 lb Capacity)	58913-011L	O|O	**85959**	...		...	...
		65992-003	O|O	**85959**	...		...	...
		00119797	O|O	**85959**	...		...	...
		58913011	O|O	**85959**	...		...	...
		58913011L	O|O	**85959**	...		...	...
		65992003	O|O	**85959**	...		...	...
04-21	Buses with Hendrickson Softek Suspension (8,500 lb - 10,000 lb Capacity)	0055008	O|O	**85959**	...		...	...
		58913-007	O|O	**85959**	...		...	...
		58913-007L	O|O	**85959**	...		...	...
		58913-009	O|O	**85959**	...		...	...
		58913-009L	O|O	**85959**	...		...	...
		0085990	O|O	**85959**	...		...	...
		58913007	O|O	**85959**	...		...	...
		58913007L	O|O	**85959**	...		...	...
		58913009L	O|O	**85959**	...		...	...
		471700000456	O|O	**85959**	...		...	...
04-21	Buses with Leaf Spring Rear Suspension	0088035		...	...	O|O	**85090**	...
		471700000464		...	...	O|O	**85090**	...
BOYDSTUN EQUIPMENT MANUFACTURING								
	Trailers with Ridewell RAR-210 Suspensions	1253069B000		...	...	O|O	**85005**	**89430**
	Trailers with Ridewell RAR-221AS-11-USW, RAR-221AS-11-1-USW Suspensions	1253069B000		...	...	O|O	**85005**	**89430**
BROCKWAY SCHOOL BUS								
	55 and 61 Passenger School Bus	.....	O|O	**83216**	...		...	...
		.....		...	...	O|O	**85305**	...
	88WH, 128W, 154W Models	.....	O|O	**83216**	...		...	...
	257T, 260S, 260T Models	.....	O|O	**83207**	**89407**		...	...
	300, 400, 500 Models	.....	O|O	**85012**	**89413**		...	...
		.....	O|O	**85307**	...		...	...
	Less than 55 Passenger School Bus	.....	O|O	**83216**	...		...	...
	Models with O.E.M. Number	14QK281P10	O|O	**85305**	...		...	...
		14QK282P1	O|O	**83216**	...		...	...
		14QK282P3	O|O	**83216**	...		...	...
		14QK-281P10	O|O	**85305**	...		...	...
		14QK-282P1	O|O	**83216**	...		...	...
		14QK-282P3	O|O	**83216**	...		...	...
		152398	O|O	**85304**	...		...	...
		152412	O|O	**83215**	...		...	...
		508657	O|O	**85307**	...		...	...
		515231	O|O	**85303**	**89422**		...	...
		530873	O|O	**83207**	**89407**		...	...
		532397	O|O	**85307**	...		...	...
BUILT RITE								
	Additional O.E.M. Interchanges	70039	O|O	**85303**	**89422**		...	...
		70041	O|O	**85305**	...		...	...
	Models with Air Suspension	318-06-100		...	...	O|O	**85006**	...
		31806100		...	...	O|O	**85006**	...
BUS & TRUCK CO.								
	Silver Eagle	70039	O|O	**85303**	**89422**		...	...

APPLICATION GUIDE - TRUCKS, TRAILERS AND BUSES

Year Ano Année	Model Modelo Modle	OEM #		Front			Rear	
				Fleetline	GasSLX		Fleetline	GasSLX
BUS & TRUCK CO. (CONT'D)								
	Silver Eagle	70041	○|○	**85305**	...		...	...
		680091	○|○	**85303**	**89422**		...	...
CARPENTER BUS								
	Models with O.E.M. Number	63-0001		...	...	○|○	**85713**	...
		0272SS5	○|○	**85712**	...		...	...
		0272-SS5	○|○	**85712**	...		...	...
		630001		...	...	○|○	**85713**	...
CASCADE TRAILER								
	Models with Air Suspension	120-1		...	...	○|○	**83125**	...
		1201		...	...	○|○	**83125**	...
CATERPILLAR								
CT660								
12-17	Models with Hendrickson HMX 400/460 Haulmax with 16.5" Saddle	60680-004		...	...		**83143**	...
		60680-004L		...	...		**83143**	...
		60680004		...	...		**83143**	...
		60680004L		...	...		**83143**	...
		H60680004		...	...		**83143**	...
12-17	Models with Hendrickson HMX 400/460 Haulmax with 17.5" & 18.5" Saddle	60680-005		...	...		**83142**	...
		60680-005L		...	...		**83142**	...
		60680005		...	...		**83142**	...
		60680005L		...	...		**83142**	...
		HDR60680-005		...	...		**83142**	...
		HDR60680005		...	...		**83142**	...
12-17	Models with Hendrickson Primaax EX 232, 462 and 692 Air Suspension (8-1/2" to 10" Ride Height)	60657-003		...	...	○|○	**85072**	...
		60657-003L		...	...	○|○	**85072**	...
		60657003		...	...	○|○	**85072**	...
		60657003L		...	...	○|○	**85072**	...
12-17	Models with Hendrickson Primaax EX 232, 462 and 692 Air Suspension (13" Ride Height)	60665-011		...	...	○|○	**85967**	...
		60665-011L		...	...	○|○	**85967**	...
		60665011		...	...	○|○	**85967**	...
CT680								
15-17	Models HAS-402 Hendrickson Air Suspensions	60670-005		...	...	○|○	**83137**	...
		60670-005L		...	...	○|○	**83137**	...
		60670005		...	...	○|○	**83137**	...
		60670005L		...	...	○|○	**83137**	...
CT681								
14-17	Models with Hendrickson HMX 400/460 Haulmax with 16.5" Saddle	60680-004		...	...		**83143**	...
		60680-004L		...	...		**83143**	...
		60680004		...	...		**83143**	...
		60680004L		...	...		**83143**	...
		H60680004		...	...		**83143**	...
14-17	Models with Hendrickson HMX 400/460 Haulmax with 17.5" & 18.5" Saddle	60680-005		...	...		**83142**	...
		60680-005L		...	...		**83142**	...
		60680005		...	...		**83142**	...
		60680005L		...	...		**83142**	...
		HDR60680-005		...	...		**83142**	...
		HDR60680005		...	...		**83142**	...
CHALLENGE COOK								
CEMENT TRUCK								
	Cement Trucks with 1/2" Bearing mount	632147	○|○	**632147**				

APPLICATION GUIDE - TRUCKS, TRAILERS AND BUSES

Year Ano Année	Model Modelo Modle	OEM #		Front			Rear	
				Fleetline	GasSLX		Fleetline	GasSLX
CHALLENGE COOK (CONT'D)								
CEMENT TRUCK (cont'd)								
	Cement Trucks with 3/4" Bushing & Sleeve mount	1540212	o|o	**646155**				
		1540459	o|o	**646155**				
	Cement Trucks with 3/4" Bushing & Sleeve mount	632155	o|o	**646177**				
CHALMERS SUSPENSION								
	800 Series - 46K Tandem Truck Suspensins (HD Shock Kit with High Mounts)	665174		...	...	o|o	**85060**	...
		800670		...	...	o|o	**85060**	...
	800 Series - 46K Tandem Truck Suspensins (HD Shock Kit with Low Mounts)	800781		...	...	o|o	**85314**	**89425**
	K800199 Model Shock Kit (Stanard)	665174		...	...	o|o	**85060**	...
		K800199		...	...	o|o	**85060**	...
	K880233 Model Shock Kit (Standard 50K Suspension)	665174		...	...	o|o	**85060**	...
		K880233		...	...	o|o	**85060**	...
	K880247 Model Shock Kit	665174		...	...	o|o	**85060**	...
		K880247		...	...	o|o	**85060**	...
	K880248 Model Shock Kit	K880248		...	...	o|o	**85314**	**89425**
	K880642 Model Shock Kit (Used on Western Star only)	665174		...	...	o|o	**85060**	...
		K880642		...	...	o|o	**85060**	...
	Models with O.E.M. Number	21335		...	...	o|o	**G63355**	...
	Single Axle Truck Suspension (1023-23K, 1030 -30K, 1040-40K)	665174		...	...	o|o	**85060**	...
CHAMPION BUS INC								
AMERICAN COACH								
	Shuttle buses with Ford E350 Chassis	8C2Z18124D	-|o	**G63622**	...		...	...
		8C2Z18125D		...	...	-|o	**G63623**	...
		8C2Z-18124-D	-|o	**G63622**	...		...	...
		8C2Z-18125-D		...	...	-|o	**G63623**	...
		8C24-18045-DA	-|o	**G63622**	...		...	...
		8C24-18080-DB		...	...	-|o	**G63623**	...
		8C2418045DA	-|o	**G63622**	...		...	...
		8C2418080DB		...	...	-|o	**G63623**	...
		ASH1136		...	...	-|o	**G63623**	...
		ASH1154	-|o	**G63622**	...		...	...
		ASH-1136		...	...	-|o	**G63623**	...
		ASH-1154	-|o	**G63622**	...		...	...
		AT163G	-|o	**G63622**	...		...	...
		AT164G		...	...	-|o	**G63623**	...
		AT-163G	-|o	**G63622**	...		...	...
		AT-164G		...	...	-|o	**G63623**	...
	Shuttle buses with Ford E450 Chassis	8C2Z18124D	-|o	**G63622**	...		...	...
		8C2Z18125D		...	...	-|o	**G63623**	...
		8C2Z-18124-D	-|o	**G63622**	...		...	...
		8C2Z-18125-D		...	...	-|o	**G63623**	...
		8C24-18045-DA	-|o	**G63622**	...		...	...
		8C24-18080-DB		...	...	-|o	**G63623**	...
		8C2418045DA	-|o	**G63622**	...		...	...
		8C2418080DB		...	...	-|o	**G63623**	...
		ASH1136		...	...	-|o	**G63623**	...
		ASH1154	-|o	**G63622**	...		...	...
		ASH-1136		...	...	-|o	**G63623**	...
		ASH-1154	-|o	**G63622**	...		...	...
		AT163G	-|o	**G63622**	...		...	...
		AT164G		...	...	-|o	**G63623**	...
		AT-163G	-|o	**G63622**	...		...	...

Year Ano Année	Model Modelo Modle	OEM #		Front			Rear	
				Fleetline	GasSLX		Fleetline	GasSLX
CHAMPION BUS INC (CONT'D)								
AMERICAN COACH (cont'd)								
	Shuttle buses with Ford E450 Chassis	AT-164G		...	...		G63623	...
CHALLENGER								
	Shuttle buses with Ford E350 Chassis	8C2Z18124D		G63622	...		...	...
		8C2Z18125D		...	...		G63623	...
		8C2Z-18124-D		G63622	...		...	...
		8C2Z-18125-D		...	...		G63623	...
		8C24-18045-DA		G63622	...		...	...
		8C24-18080-DB		...	...		G63623	...
		8C2418045DA		G63622	...		...	...
		8C2418080DB		...	...		G63623	...
		ASH1136		...	...		G63623	...
		ASH1154		G63622	...		...	...
		ASH-1136		...	...		G63623	...
		ASH-1154		G63622	...		...	...
		AT163G		G63622	...		...	...
		AT164G		...	...		G63623	...
		AT-163G		G63622	...		...	...
		AT-164G		...	...		G63623	...
	Shuttle buses with Ford E450 Chassis	8C2Z18124D		G63622	...		...	...
		8C2Z18125D		...	...		G63623	...
		8C2Z-18124-D		G63622	...		...	...
		8C2Z-18125-D		...	...		G63623	...
		8C24-18045-DA		G63622	...		...	...
		8C24-18080-DB		...	...		G63623	...
		8C2418045DA		G63622	...		...	...
		8C2418080DB		...	...		G63623	...
		ASH1136		...	...		G63623	...
		ASH1154		G63622	...		...	...
		ASH-1136		...	...		G63623	...
		ASH-1154		G63622	...		...	...
		AT163G		G63622	...		...	...
		AT164G		...	...		G63623	...
		AT-163G		G63622	...		...	...
		AT-164G		...	...		G63623	...
CRUSADER								
	Shuttle buses with Ford E350 Chassis	8C2Z18124D		G63622	...		...	...
		8C2Z18125D		...	...		G63623	...
		8C2Z-18124-D		G63622	...		...	...
		8C2Z-18125-D		...	...		G63623	...
		8C24-18045-DA		G63622	...		...	...
		8C24-18080-DB		...	...		G63623	...
		8C2418045DA		G63622	...		...	...
		8C2418080DB		...	...		G63623	...
		ASH1136		...	...		G63623	...
		ASH1154		G63622	...		...	...
		ASH-1136		...	...		G63623	...
		ASH-1154		G63622	...		...	...
		AT163G		G63622	...		...	...
		AT164G		...	...		G63623	...
		AT-163G		G63622	...		...	...
		AT-164G		...	...		G63623	...
LF TRANSPORT								
	Shuttle buses with Ford E450 Chassis (Up to 2023)	8C2Z18124D		G63622	...		...	...

APPLICATION GUIDE - TRUCKS, TRAILERS AND BUSES

Year Ano Année	Model Modelo Modle	OEM #		Front			Rear	
				Fleetline	GasSLX		Fleetline	GasSLX
CHAMPION BUS INC (CONT'D)								
LF TRANSPORT (cont'd)								
	Shuttle buses with Ford E450 Chassis (Up to 2023)	8C2Z18125D		...	...	−|O	G63623	...
		8C2Z-18124-D	−|O	G63622	...		...	...
		8C2Z-18125-D		...	...	−|O	G63623	...
		8C24-18045-DA	−|O	G63622	...		...	...
		8C24-18080-DB		...	...	−|O	G63623	...
		8C2418045DA	−|O	G63622	...		...	...
		8C2418080DB		...	...	−|O	G63623	...
		ASH1136		...	...	−|O	G63623	...
		ASH1154	−|O	G63622	...		...	...
		ASH-1136		...	...	−|O	G63623	...
		ASH-1154	−|O	G63622	...		...	...
		AT163G	−|O	G63622	...		...	...
		AT164G		...	...	−|O	G63623	...
		AT-163G	−|O	G63622	...		...	...
		AT-164G		...	...	−|O	G63623	...
	GMC P6000 Chassis	22064230	−|−	83136	...		...	...
CHANCE COACH								
	Additional O.E.M. Interchanges	270-6708	O|O	85014				
		2706708	O|O	85014				
	Buses with 3/4" Mounting Pins	2021459	O|O	85012	89413		...	...
	Models with O.E.M. Number	6892	O|O	83207	89407		...	...
		6893	O|O	83203	89436		...	...
		59039	O|O	83207	89407		...	...
		665017		...	...	O|O	85014	...
		728600	O|O	83203	89436		...	...
		AS789B	O|O	85014	...		...	...
CHEVROLET								
B6								
90-07	B6, B7 Model School Bus Chassis With 15000, 19000, 21000 lb Multileaf Springs	15174902		...	...	−|−	85071	...
		22064232		...	...	−|−	85071	...
B7								
93-02	With 15000, 19000, 21000 lb Multileaf Springs	15174902		...	...	−|−	85071	...
		22064232		...	...	−|−	85071	...
03-07	B6, B7 Model School Bus Chassis With 15000, 19000, 21000 lb Multileaf Springs	15174902		...	...	−|−	85071	...
		22064232		...	...	−|−	85071	...
90-92	B6, B7 Model School Bus Chassis With 15000, 19000, 21000 lb Multileaf Springs	15174902		...	...	−|−	85071	...
		22064232		...	...	−|−	85071	...
B - SERIES - SCHOOL BUS								
	Models with O.E.M. Number	15123676	−|−	83136	...		...	...
		15588554	−|−	83136	...		...	...
		22064230	−|−	83136	...		...	...
		88982682	−|−	83136	...		...	...
C60 KODIAK								
90-96	Truck Cabs with Link Cabmate Model GMC104TK	1201-0054	O|O	83021				
		1202-0054	O|O	83021				
		12010054	O|O	83021				
		12020054	O|O	83021				

APPLICATION GUIDE - TRUCKS, TRAILERS AND BUSES

Year Ano Année	Model Modelo Modle	OEM #		Front			Rear	
				Fleetline	GasSLX		Fleetline	GasSLX

CHEVROLET (CONT'D)

C70 KODIAK

90-96	Truck Cabs with Link Cabmate Model GMC104TK	1201-0054	○|○	**83021**				
		1202-0054	○|○	**83021**				
		12010054	○|○	**83021**				
		12020054	○|○	**83021**				

C4500 KODIAK

03-09	Truck Cabs with Link Cabmate Model GMC104TK	1201-0054	○|○	**83021**				
		1202-0054	○|○	**83021**				
		12010054	○|○	**83021**				
		12020054	○|○	**83021**				
90-09	C Chassis - Conventional Cab	15123676	–|–	**83136**	...		...	...
		15588554	–|–	**83136**	...		...	...
		15887728	–|–	**83136**	...		...	...
		19152843	–|–	**83136**	...		...	...
		22064230	–|–	**83136**	...		...	...
		88982682	–|–	**83136**	...		...	...
90-09	C Chassis - Conventional Cab w/19000, 21000, 23000 lb Taperleaf Springs (EXC Low Profile Vehicle)	22064233		...	...	–|–	**83136**	...
90-09	C Chassis - Conventional Cab With 15000, 19000, 21000 lb Multileaf Springs	15174902		...	...	–|–	**85071**	...
		22064232		...	...	–|–	**85071**	...
		88982686		...	...	–|–	**85071**	...
83-99	C Chassis - Conventional Cab with 9100 to 17500 lb Rear Axle	22064432		...	...	○|○	**83221**	...

C5500 KODIAK

03-09	Truck Cabs with Link Cabmate Model GMC104TK	1201-0054	○|○	**83021**				
		1202-0054	○|○	**83021**				
		12010054	○|○	**83021**				
		12020054	○|○	**83021**				
90-09	C Chassis - Conventional Cab	15123676	–|–	**83136**	...		...	...
		15588554	–|–	**83136**	...		...	...
		15887728	–|–	**83136**	...		...	...
		19152843	–|–	**83136**	...		...	...
		22064230	–|–	**83136**	...		...	...
		88982682	–|–	**83136**	...		...	...
90-09	C Chassis - Conventional Cab w/19000, 21000, 23000 lb Taperleaf Springs (EXC Low Profile Vehicle)	22064233		...	...	–|–	**83136**	...
90-09	C Chassis - Conventional Cab With 15000, 19000, 21000 lb Multileaf Springs	15174902		...	...	–|–	**85071**	...
		22064232		...	...	–|–	**85071**	...
		88982686		...	...	–|–	**85071**	...
90-91	Truck Cabs with Link Cabmate Model GMC104TK	1201-0054	○|○	**83021**				
		1202-0054	○|○	**83021**				
		12010054	○|○	**83021**				
		12020054	○|○	**83021**				
83-99	C Chassis - Conventional Cab with 9100 to 17500 lb Rear Axle	22064432		...	...	○|○	**83221**	...

C6500 KODIAK

96-02	Models with Hendrickson Air Suspension (Stamping number 47902-29)	12474917		...	...	○|○	**83137**	...
		15740554		...	...	○|○	**83137**	...
90-09	Conventional Cab w/15000, 19000, 21000 lb Multileaf Springs	15174902		...	...	–|–	**85071**	...
		22064232		...	...	–|–	**85071**	...
		88982686		...	...	–|–	**85071**	...
90-09	Conventional Cab w/19000, 21000, 23000 lb Taperleaf Springs (EXC Low Profile Vehicle)	22064233		...	...	–|–	**83136**	...
90-09	Conventional Cab w/ Front Shock with O.E.M. Number	15123676	–|–	**83136**	...		...	...
		15174898	–|–	**83136**	...		...	...

Year Ano Année	Model Modelo Modle	OEM #		Front			Rear	
				Fleetline	GasSLX		Fleetline	GasSLX
CHEVROLET (CONT'D)								
C6500 KODIAK (cont'd)								
90-09	Conventional Cab w/ Front Shock with O.E.M. Number	15588554	−|−	**83136**	...		...	...
		15887728	−|−	**83136**	...		...	...
		19152843	−|−	**83136**	...		...	...
		22064230	−|−	**83136**	...		...	...
		88982682	−|−	**83136**	...		...	...
97-09	Models with Hendrickson Air Suspension (Stamping number 47902-13)	12474915		...	...	o|o	**83122**	**89406**
		15963161		...	...	o|o	**83122**	**89406**
97-09	Truck Cabs with Link Cabmate Model GMC104TK	1201-0054	o|o	**83021**				
		1202-0054	o|o	**83021**				
		12010054	o|o	**83021**				
		12020054	o|o	**83021**				
83-99	Conventional Cab with 9100 to 17500 lb Rear Axle	22064432		...	...	o|o	**83221**	...
C7500 KODIAK								
96-02	Models with Hendrickson Air Suspension (Stamping number 47902-29)	12474917		...	...	o|o	**83137**	...
		15740554		...	...	o|o	**83137**	...
90-09	Conventional Cab w/15000, 19000, 21000 lb Multileaf Springs	15174902		...	...	−|−	**85071**	...
		22064232		...	...	−|−	**85071**	...
		88982686		...	...	−|−	**85071**	...
90-09	Conventional Cab w/19000, 21000, 23000 lb Taperleaf Springs (EXC Low Profile Vehicle)	22064233		...	...	−|−	**83136**	...
90-09	Conventional Cab w/ Front Shock with O.E.M. Number	15123676	−|−	**83136**	...		...	...
		15174898	−|−	**83136**	...		...	...
		15588554	−|−	**83136**	...		...	...
		15887728	−|−	**83136**	...		...	...
		19152843	−|−	**83136**	...		...	...
		22064230	−|−	**83136**	...		...	...
		88982682	−|−	**83136**	...		...	...
97-09	Models with Hendrickson Air Suspension (Stamping number 47902-13)	12474915		...	...	o|o	**83122**	**89406**
		15963161		...	...	o|o	**83122**	**89406**
97-09	Truck Cabs with Link Cabmate Model GMC104TK	1201-0054	o|o	**83021**				
		1202-0054	o|o	**83021**				
		12010054	o|o	**83021**				
		12020054	o|o	**83021**				
83-99	Conventional Cab with 9100 to 17500 lb Rear Axle	22064432		...	...	o|o	**83221**	...
C8500								
03-09	Models with Hendrickson Air Suspension (Stamping number 47902-13)	12474915		...	...	o|o	**83122**	**89406**
		15963161		...	...	o|o	**83122**	**89406**
C8500 KODIAK								
96-02	Models with Hendrickson Air Suspension (Stamping number 47902-29)	12474917		...	...	o|o	**83137**	...
		15740554		...	...	o|o	**83137**	...
90-09	Conventional Cab w/15000, 19000, 21000 lb Multileaf Springs	15174902		...	...	−|−	**85071**	...
		22064232		...	...	−|−	**85071**	...
		88982686		...	...	−|−	**85071**	...
90-09	Conventional Cab w/19000, 21000, 23000 lb Taperleaf Springs (EXC Low Profile Vehicle)	22064233		...	...	−|−	**83136**	...
90-09	Conventional Cab w/ Front Shock with O.E.M. Number	15123676	−|−	**83136**	...		...	...
		15174898	−|−	**83136**	...		...	...
		15588554	−|−	**83136**	...		...	...
		15887728	−|−	**83136**	...		...	...
		19152843	−|−	**83136**	...		...	...
		22064230	−|−	**83136**	...		...	...
		88982682	−|−	**83136**	...		...	...

APPLICATION GUIDE - TRUCKS, TRAILERS AND BUSES

Year Ano Année	Model Modelo Modle	OEM #		Front			Rear	
				Fleetline	GasSLX		Fleetline	GasSLX
CHEVROLET (CONT'D)								
83-99	Conventional Cab with 9100 to 17500 lb Rear Axle	22064432		...	...	o|o	**83221**	...
C - SERIES (C6500, C7500, C8500) KODIAK								
	Models with O.E.M. Number	88982684	–|–	**83136**	...		...	...
	Bruin Tractors with J9 Cabs with Link Cabmate Model GMC92J9	1202-0012	o|o	**83023**				
		12020012	o|o	**83023**				
	Kodiak Truck Cabs with Link Cabmate Model GMC92TK	1202-0012	o|o	**83023**				
		12020012	o|o	**83023**				
	Models with O.E.M. Number	508-86		...	...	–|–	**83136**	...
		50886		...	...	–|–	**83136**	...
	Titan Cabover (Sleeper & Non-Sleeper Trucks) with Link Cabmate Model GMC-2P-A	1202-0032	o|o	**83016**				
		12020032	o|o	**83016**				
P60								
92-96	Motorhome Chassis	22064233		...	...	–|–	**83136**	...
P6000								
92-96	Motorhome Chassis	22064233		...	...	–|–	**83136**	...
SILVERADO 4500 HD								
19-21	Models with 4 x 4 Rear	4109458C2		...	...		**83243**	...
19-21	Models with 11K, 13.5K or 15.5K VARI-RATE Rear Suspension	4206863C1		...	...		**83398**	...
		4208946C1		...	...		**83398**	...
19-21	Models with IROS Rear	4214011C2		...	...		**85670**	...
19-21	Models with Taperleaf Front	4089293C1		**83397**	...		...	...
		4109582C1		**83397**	...		...	...
		4109583C1		**83397**	...		...	...
		4207304C1		**83397**	...		...	...
SILVERADO 5500 HD								
19-22	Models with 4 x 4 Rear	4109458C2		...	...		**83243**	...
19-22	Models with IROS Rear	4214011C2		...	...		**85670**	...
19-22	Models with Taperleaf Front	4089293C1		**83397**	...		...	...
		4109582C1		**83397**	...		...	...
		4109583C1		**83397**	...		...	...
19-23	Models with 11K, 13.5K or 15.5K VARI-RATE Rear Suspension	4206863C1		...	...		**83398**	...
		4208946C1		...	...		**83398**	...
19-23	Models with Taperleaf Front	4207304C1		**83397**	...		...	...
SILVERADO 6500 HD								
19-22	Models with 4 x 4 Rear	4109458C2		...	...		**83243**	...
19-22	Models with IROS Rear	4214011C2		...	...		**85670**	...
19-22	Models with Taperleaf Front	4089293C1		**83397**	...		...	...
		4109582C1		**83397**	...		...	...
		4109583C1		**83397**	...		...	...
19-23	Models with 11K, 13.5K or 15.5K VARI-RATE Rear Suspension	4206863C1		...	...		**83398**	...
		4208946C1		...	...		**83398**	...
19-23	Models with Taperleaf Front	4207304C1		**83397**	...		...	...
T5500								
90-06	Tilt Cab w/15000, 19000, 21000 lb Multileaf Springs	15174902		...	...	–|–	**85071**	...
		22064232		...	...	–|–	**85071**	...
97-09	FL1 Tilt Cab with 8100 lb Axle	22064804	–|–	**83136**	...		...	...
		22064805	–|–	**83136**	...		...	...
		22165187	–|–	**83136**	...		...	...
		22165188	–|–	**83136**	...		...	...

APPLICATION GUIDE - TRUCKS, TRAILERS AND BUSES

Year Ano Année	Model Modelo Modle	OEM #		Front			Rear	
				Fleetline	GasSLX		Fleetline	GasSLX
CHEVROLET (CONT'D)								
T5500 (cont'd)								
97-09	FL2 Tilt Cab with 5000 to 11000 lb Axle	22064807	−|−	**83136**	...		...	...
		22166442	−|−	**83136**	...		...	...
97-09	FL3 Tilt Cab with 14575 lb Axle	22064806	−|−	**83136**	...		...	...
		22165189	−|−	**83136**	...		...	...
92-99	Tilt Cab w/19000, 21000, 23000 lb Taperleaf Springs (EXC Low Profile Veh.)	22064233		...	...	−|−	**83136**	...
T6500								
90-06	Tilt Cab w/15000, 19000, 21000 lb Multileaf Springs	15174902		...	...	−|−	**85071**	...
		22064232		...	...	−|−	**85071**	...
97-09	FL1 Tilt Cab with 8100 lb Axle	22064804	−|−	**83136**	...		...	...
		22064805	−|−	**83136**	...		...	...
		22165187	−|−	**83136**	...		...	...
		22165188	−|−	**83136**	...		...	...
97-09	FL2 Tilt Cab with 5000 to 11000 lb Axle	22064807	−|−	**83136**	...		...	...
		22166442	−|−	**83136**	...		...	...
97-09	FL3 Tilt Cab with 14575 lb Axle	22064806	−|−	**83136**	...		...	...
		22165189	−|−	**83136**	...		...	...
92-99	Tilt Cab w/19000, 21000, 23000 lb Taperleaf Springs (EXC Low Profile Veh.)	22064233		...	...	−|−	**83136**	...
1999	Models with Hendrickson Air Suspension (Stamping number 47902-13)	12474915		...	...	o|o	**83122**	**89406**
		15963161		...	...	o|o	**83122**	**89406**
T7500								
90-06	Tilt Cab w/15000, 19000, 21000 lb Multileaf Springs	15174902		...	...	−|−	**85071**	...
		22064232		...	...	−|−	**85071**	...
97-09	FL1 Tilt Cab with 8100 lb Axle	22064804	−|−	**83136**	...		...	...
		22064805	−|−	**83136**	...		...	...
		22165187	−|−	**83136**	...		...	...
		22165188	−|−	**83136**	...		...	...
97-09	FL2 Tilt Cab with 5000 to 11000 lb Axle	22064807	−|−	**83136**	...		...	...
		22166442	−|−	**83136**	...		...	...
97-09	FL3 Tilt Cab with 14575 lb Axle	22064806	−|−	**83136**	...		...	...
		22165189	−|−	**83136**	...		...	...
92-99	Tilt Cab w/19000, 21000, 23000 lb Taperleaf Springs (EXC Low Profile Veh.)	22064233		...	...	−|−	**83136**	...
1999	Models with Hendrickson Air Suspension (Stamping number 47902-13)	12474915		...	...	o|o	**83122**	**89406**
		15963161		...	...	o|o	**83122**	**89406**
T8500								
90-06	Tilt Cab w/15000, 19000, 21000 lb Multileaf Springs	15174902		...	...	−|−	**85071**	...
		22064232		...	...	−|−	**85071**	...
04-09	Models with Hendrickson Air Suspension (Stamping number 47902-13)	12474915		...	...	o|o	**83122**	**89406**
		15963161		...	...	o|o	**83122**	**89406**
97-09	FL1 Tilt Cab with 8100 lb Axle	22064804	−|−	**83136**	...		...	...
		22064805	−|−	**83136**	...		...	...
		22165187	−|−	**83136**	...		...	...
		22165188	−|−	**83136**	...		...	...
97-09	FL2 Tilt Cab with 5000 to 11000 lb Axle	22064807	−|−	**83136**	...		...	...
		22166442	−|−	**83136**	...		...	...
97-09	FL3 Tilt Cab with 14575 lb Axle	22064806	−|−	**83136**	...		...	...
		22165189	−|−	**83136**	...		...	...
92-99	Tilt Cab w/19000, 21000, 23000 lb Taperleaf Springs (EXC Low Profile Veh.)	22064233		...	...	−|−	**83136**	...
VAN 1 TON, P SERIES								
92-96	Motorhome Chassis	22064233		...	...	−|−	**83136**	...

APPLICATION GUIDE - TRUCKS, TRAILERS AND BUSES

Year Ano Année	Model Modelo Modle	OEM #		Front			Rear	
				Fleetline	GasSLX		Fleetline	GasSLX
CHEVROLET (CONT'D)								
W4								
83-95	All Models with O.E.M. Number	9-51630-666-0		...	...	○|○	85012	89413
		9-51630-666-2		...	...	○|○	85012	89413
		9516306660		...	...	○|○	85012	89413
		9516306662		...	...	○|○	85012	89413
W5								
88-97	...	1-51630-217-0	−|○	83114	...		...	...
		1-51630-217-1	−|○	83114	...		...	...
		1-51630-219-1	−|○	83114	...		...	...
W6								
86-91	...	1-51630-217-0	−|○	83114	...		...	...
		1-51630-217-1	−|○	83114	...		...	...
W4500 TILTMASTER								
87-10	Models with 11000 lb & 13000 lb Suspension	8-94454-986-0	−|○	83515	...		...	...
		8-94454-987-0	−|○	83515	...		...	...
		8-97253-620-0	−|○	83515	...		...	...
		9-51630-647-1	−|○	83515	...		...	...
		94454987	−|○	83515	...		...	...
		97083027	−|○	83515	...		...	...
		97083029	−|○	83515	...		...	...
		97253620	−|○	83515	...		...	...
		98232671	−|○	83515	...		...	...
		8944549860	−|○	83515	...		...	...
		8944549870	−|○	83515	...		...	...
		8972536200	−|○	83515	...		...	...
		9516306471	−|○	83515	...		...	...
W5500 TILTMASTER								
88-10	Models with 11000 lb & 13000 lb Suspension	97253620	−|○	83515	...		...	...
W6500 TILTMASTER								
87-96	Models with 11000 lb & 13000 lb Suspension	1-51630-168-1	−|○	83515	...		...	...
		1516301681	−|○	83515	...		...	...
W - SERIES (ISUZU)								
	Models with O.E.M. Number	8-94057-593-0	−|○	83114	...		...	...
		8-97201-960-0	−|○	83515	...		...	...
		94033786	−|○	83114	...		...	...
		94051090	−|○	83114	...		...	...
		94057593	−|○	83114	...		...	...
		97201960	−|○	83515	...		...	...
		8940575930	−|○	83114	...		...	...
		8972019600	−|○	83515	...		...	...
CHEVROLET TRUCK (ALSO SEE GMC TRUCK)								
4, 40, 4000 & 4500 SERIES								
60-68	C-40 , P-40, SS-40 Models	.....	○|○	85005	89430		...	...
67-68	TDM 4 Cycle Detroit Diesel with Tandem Axle - Exc. Tilt Cab	3192892		...	...	○|○	83221	...
		22012096		...	...	○|○	83221	...
69-70	D-D Forward Control with 9000 & 11000 lb. Axles - Exc. Tilt Cab	3192892	○|○	83221	...		...	...
		22012096	○|○	83221	...		...	...
69-70	D-D Forward Control with Tilt Cab	4940606	○|○	83126	89430		...	...

APPLICATION GUIDE - TRUCKS, TRAILERS AND BUSES

Year Ano Année	Model Modelo Modle	OEM #		Front			Rear	
				Fleetline	GasSLX		Fleetline	GasSLX

CHEVROLET TRUCK (ALSO SEE GMC TRUCK) (CONT'D)

4, 40, 4000 & 4500 SERIES (cont'd)

69-70	D-D Forward Control with Tilt Cab	22012095	O|O	**83126**	**89430**		...	...
67-72	S-40 School Bus	3192892	O|O	**83221**	...		...	...
		22012096	O|O	**83221**	...		...	...
69-72	All - Exc. Tilt Cab	3192892	O|O	**83221**	...		...	...
		22012096	O|O	**83221**	...		...	...
1968	Cowl - Exc. School Bus	3192892	O|O	**83221**	...		...	...
		22012096	O|O	**83221**	...		...	...

5, 50, 5000 & 5500 SERIES

67-68	TDM 4 Cycle Detroit Diesel with Tandem Axle - Exc. Tilt Cab	3192892		...	...	O|O	**83221**	...
		22012096		...	...	O|O	**83221**	...
63-69	C-50, M-50, S-50, SE-50, T-50 Models	.....		...	...	O|O	**83221**	...
		.....	O|O	**85005**	**89430**		...	...
69-70	D-D Forward Control with 9000 & 11000 lb. Axles - Exc. Tilt Cab	3192892	O|O	**83221**	...		...	...
		22012096	O|O	**83221**	...		...	...
69-70	D-D Forward Control with Tilt Cab	4940606	O|O	**83126**	**89430**		...	...
		22012095	O|O	**83126**	**89430**		...	...
69-72	All - Exc. Tilt Cab	3192892	O|O	**83221**	...		...	...
		22012096	O|O	**83221**	...		...	...
71-72	TDM 4 Cycle Detroit Diesel with Tandem Axle - Exc. Tilt Cab	4940606		...	...	O|O	**83126**	**89430**
		22012095		...	...	O|O	**83126**	**89430**
73-80	C, M, S Chassis - Conventional Cab	4975467	O|O	**83207**	**89407**		...	...
		4975494	O|O	**83207**	**89407**		...	...
		22007750	O|O	**83207**	**89407**		...	...
75-80	C, M, S Chassis - Conventional Cab	4975510	O|O	**83221**	...		...	...
76-89	C, M, S Chassis - Conventional Cab	22012096		...	...	O|O	**83221**	...
		22012169		...	...	O|O	**83221**	...
76-89	C Chassis - Conventional Cab	22012196		...	...	O|O	**83221**	...
1968	Cowl - Exc. School Bus	3192892	O|O	**83221**	...		...	...
		22012096	O|O	**83221**	...		...	...

6, 60, 6000 & 6500 SERIES

67-68	TDM 4 Cycle Detroit Diesel with Tandem Axle - Exc. Tilt Cab	3192892		...	...	O|O	**83221**	...
		22012096		...	...	O|O	**83221**	...
68-69	All with 9000 & 11000 lb. Axles - Exc. Tilt Cab	4940606	O|O	**83126**	**89430**		...	...
		22012095	O|O	**83126**	**89430**		...	...
69-70	D - D Forward Control with 9000 & 11000 lb. Axles - Exc. Tilt Cab	3192892	O|O	**83221**	...		...	...
		22012096	O|O	**83221**	...		...	...
69-72	All - Exc. Tilt Cab	3192892	O|O	**83221**	...		...	...
		22012096	O|O	**83221**	...		...	...
71-72	Conventional Cab & Tilt Cab with 9000 & 11000 lb. Axles	4940606		...	...	O|O	**83126**	**89430**
		22012095		...	...	O|O	**83126**	**89430**
71-72	TDM 4 Cycle Detroit Diesel with Tandem Axle	4940606		...	...	O|O	**83126**	**89430**
		22012095		...	...	O|O	**83126**	**89430**
73-74	SG, SM-60	3192890	O|O	**83126**	**89430**		...	...
73-74	SG, SM-61	4940606	O|O	**83126**	**89430**		...	...
73-74	SG, SM-62	22002293	O|O	**83126**	**89430**		...	...
73-74	SG, SM-63	22007701	O|O	**83126**	**89430**		...	...
73-74	SG, SM-64	22007751	O|O	**83303**	...		...	...
73-75	C, M, S Chassis - Conventional Cab and School Bus with 5000 & 7000 lb. Axle	4975467	O|O	**83207**	**89407**		...	...
		4975494	O|O	**83207**	**89407**		...	...
		22007750	O|O	**83207**	**89407**		...	...
73-75	SE, SS-60 thru Serial # 134487 (1975 1st Design)	4975467	O|O	**83207**	**89407**		...	...
		4975494	O|O	**83207**	**89407**		...	...

APPLICATION GUIDE - TRUCKS, TRAILERS AND BUSES

Year Ano Année	Model Modelo Modle	OEM #		Front			Rear	
				Fleetline	GasSLX		Fleetline	GasSLX
CHEVROLET TRUCK (ALSO SEE GMC TRUCK) (CONT'D)								
6, 60, 6000 & 6500 SERIES (cont'd)								
73-75	SE, SS-60 thru Serial # 134487 (1975 1st Design)	22007700	O|O	**83207**	**89407**		...	...
		22007750	O|O	**83207**	**89407**		...	...
69-78	S-60	3192892	O|O	**83221**	...		...	...
		4975510	O|O	**83221**	...		...	...
73-78	S-60 w/Air Brakes	3171069		...	...	O|O	**85304**	...
		4940606		...	...	O|O	**83126**	**89430**
		22007701		...	...	O|O	**83126**	**89430**
		22007751	O|O	**83303**	...		...	...
		22012095		...	...	O|O	**83126**	**89430**
		22012166		...	...	O|O	**83126**	**89430**
76-78	SE-60 w/Hydraulic Brakes from Serial # 120000 (1975 2nd Design)	3192892		...	...	O|O	**83221**	...
		22012169		...	...	O|O	**83221**	...
73-80	C, S, T Chassis - Conventional & Tilt Cab and School Bus with 5000 & 7000 lb. Axle	3192890	O|O	**83126**	**89430**		...	...
		4940606	O|O	**83126**	**89430**		...	...
		4940662	O|O	**83126**	**89430**		...	...
		4975497	O|O	**83126**	**89430**		...	...
		22002293	O|O	**83126**	**89430**		...	...
		22007701	O|O	**83126**	**89430**		...	...
		22007751	O|O	**83303**	...		...	...
		22012095	O|O	**83126**	**89430**		...	...
75-80	C, M, S Chassis - Conventional Cab and School Bus	4975510	O|O	**83221**	...		...	...
79-80	W Chassis - 72" BBC Steel Tilt Cab	22002293	O|O	**83126**	**89430**		...	...
		22007751	O|O	**83303**	...		...	...
79-89	B6P042 School Bus (Axle codes F090, F120D)	22002295	O|O	**83303**	...		...	...
		22007753	O|O	**83303**	...		...	...
		22017531	O|O	**83303**	...		...	...
79-89	B6P042 School Bus w/15000 lb. or 17000 lb. Rear Springs	22012096		...	...	O|O	**83221**	...
		22012169		...	...	O|O	**83221**	...
79-89	B6P042 School Bus w/18500 or 20800 lb. Rear Springs	22012095		...	...	O|O	**83126**	**89430**
		22012166		...	...	O|O	**83126**	**89430**
1968	Cowl - Exc. School Bus	3192892	O|O	**83221**	...		...	...
		22012096	O|O	**83221**	...		...	...
7, 70 & 7000 SERIES								
66-72	72" BBC Steel Tilt Cab with V-6 2 Cycle Diesel Engine	3171462	O|O	**83126**	**89430**		...	...
		3192890	O|O	**83126**	**89430**		...	...
		22012095	O|O	**83126**	**89430**		...	...
66-72	72" BBC Steel Tilt Cab with V-6 2 Cycle Diesel Engine with 17201 and 17221 Axle	3192892		...	...	O|O	**83221**	...
		22012096		...	...	O|O	**83221**	...
66-72	72" BBC Steel Tilt Cab with V-6 2 Cycle Diesel Engine with 19101 and 19201 Axle	4940600		...	...	O|O	**83209**	**89414**
66-72	92" BBC Conventional Cab	3192657	O|O	**83216**	...		...	...
		4940614	O|O	**83216**	...		...	...
		4963854	O|O	**83216**	...		...	...
66-72	Conventional Cab with Tapered 2-Leaf Softride 11000 lb. Rating and F120 Axle (12000 lb.)	3171069	O|O	**85304**	...		...	...
		22046483	O|O	**85304**	...		...	...
		22052336	O|O	**85304**	...		...	...
66-72	Conventional Cab With Tapered 2-Leaf Softride 7000 & 9000 lb. Rating and F070, F090, F120 Axle (7000, 9000 & 12000 lb.)	3171068	O|O	**83216**	...		...	...
		3192657	O|O	**83216**	...		...	...
		4940614	O|O	**83216**	...		...	...
		4963853	O|O	**83216**	...		...	...
		4963854	O|O	**83216**	...		...	...

APPLICATION GUIDE - TRUCKS, TRAILERS AND BUSES

Year Ano Année	Model Modelo Modle	OEM #		Front			Rear	
				Fleetline	GasSLX		Fleetline	GasSLX

CHEVROLET TRUCK (ALSO SEE GMC TRUCK) (CONT'D)

7, 70 & 7000 SERIES (cont'd)

73-80	H, J, M Chassis - 92" & 114" BBC Conventional Cab	2204683	O|O	**85304**	...		...	...
		3171069	O|O	**85304**	...		...	...
73-80	H, J Chassis - 92" BBC Conventional Cab with V-6, V8 Diesel Engines	4940614	O|O	**83216**	...		...	...
		4963854	O|O	**83216**	...		...	...
73-80	R Chassis - Rear Engine Bus	5552451	O|O	**85308**	**89422**		...	...
		5552456		...	...	O|O	**85307**	...
		5552552		...	...	O|O	**85303**	**89422**
		22012090	O|O	**85308**	**89422**		...	...
73-80	T, W Chassis - 72" BBC Steel Tilt Cab (4 x 2) with V-6 Diesel Engine	4940606	O|O	**83126**	**89430**		...	...
		4975497	O|O	**83126**	**89430**		...	...
		22007751	O|O	**83303**	...		...	...
		22012095	O|O	**83126**	**89430**		...	...
73-80	T, W Chassis - 72" BBC Steel Tilt Cab with V-6 Gas Engine	5552452	O|O	**85303**	**89422**		...	...
		22012091	O|O	**85303**	**89422**		...	...
77-80	H, J Chassis - 92" BBC Conventional Cab	4963854	O|O	**83216**	...		...	...
		4984526	O|O	**83216**	...		...	...
83-84	S7T042 Forward Control Chassis w/17000, 18500, 21000, 23000 lb. Rear Axle	22012095		...	...	O|O	**83126**	**89430**
		22012166		...	...	O|O	**83126**	**89430**
83-84	STT042 Forward Control Chassis	3171069	O|O	**85304**	...		...	...
		22012065	O|O	**85304**	...		...	...
79-89	C, M Chassis - 97" BBC Conventional Cab	22002295	O|O	**83303**	...		...	...
		22007753	O|O	**83303**	...		...	...
		22012095		...	...	O|O	**83126**	**89430**
		22012166		...	...	O|O	**83126**	**89430**
		22017530	O|O	**83303**	...		...	...
		22017531	O|O	**83303**	...		...	...

8, 80 & 8000 SERIES

66-69	72" BBC Steel Tilt Cab	5544060	O|O	**85302**	**89420**		...	...
66-72	92" BBC Conventional Cab	3171068	O|O	**83216**	...		...	...
		3192657	O|O	**83216**	...		...	...
		4940614	O|O	**83216**	...		...	...
		4963853	O|O	**83216**	...		...	...
		4963854	O|O	**83216**	...		...	...
66-72	92" BBC Conventional Cab with 7000 & 9000 lb. Axles - Exc. 2-Leaf Softride	3171069	O|O	**85304**	...		...	...
		22046483	O|O	**85304**	...		...	...
		22052336	O|O	**85304**	...		...	...
70-80	T, W Chassis - 72" BBC Steel Tilt Cab with V-6 Gas Engine	5552452	O|O	**85303**	**89422**		...	...
		22012091	O|O	**85303**	**89422**		...	...
73-80	R Chassis - Rear Engine Bus	5552451	O|O	**85308**	**89422**		...	...
		5552452		...	...	O|O	**85303**	**89422**
		5552456		...	...	O|O	**85307**	...
		22012090	O|O	**85308**	**89422**		...	...
		22012091		...	...	O|O	**85303**	**89422**
73-81	H, J Chassis - 92" BBC Conventional Cab	4940614	O|O	**83216**	...		...	...
		4963854	O|O	**83216**	...		...	...
		4984526	O|O	**83216**	...		...	...
79-82	H, J Chassis - 92" BBC Conventional Cab 4 x 2 with Air Suspension	3171069		...	...	O|O	**85304**	...
		22012065		...	...	O|O	**85304**	...
		22046483		...	...	O|O	**85304**	...
		22052336		...	...	O|O	**85304**	...
73-86	H, J, M Chassis - 92" & 114" BBC Conventional Cab	3171069	O|O	**85304**	...		...	...
		22046483	O|O	**85304**	...		...	...
		22052336	O|O	**85304**	...		...	...

APPLICATION GUIDE - TRUCKS, TRAILERS AND BUSES

CHEVROLET TRUCK (ALSO SEE GMC TRUCK) (CONT'D)

9000 SERIES

Year Ano Année	Model Modelo Modle	OEM #		Front			Rear	
				Fleetline	GasSLX		Fleetline	GasSLX
70-72	54" BBC Aluminum Tilt Cab 6 x 4	3171069	○|○	85304	...		...	...
		22046483	○|○	85304	...		...	...
		22052336	○|○	85304	...		...	...
70-72	92" & 114" BBC Conventional Cab 6 x 4	3171069	○|○	85304	...		...	...
		22046483	○|○	85304	...		...	...
		22052336	○|○	85304	...		...	...
70-72	92" & 114" BBC Conventional Cab - Exc. 6 x 4	4940614	○|○	83216	...		...	...
		4963854	○|○	83216	...		...	...
70-80	T, W Chassis - 72" BBC Steel Tilt Cab	5552452	○|○	85303	89422		...	...
		22012091	○|○	85303	89422		...	...
70-86	D, F Chassis - 54" BBC Aluminum Tilt Cab with Rear GM Air Ride Suspension (4 Req'd)	3171069	○|○	85304	...		...	...
		22012065	○|○	85304	...		...	...
		22046483	○|○	85304	...		...	...
		22052336	○|○	85304	...		...	...
70-86	H, J Chassis - 92" BBC Conventional Cab	3171069	○|○	85304	...		...	...
		22046483	○|○	85304	...		...	...
		22052336	○|○	85304	...		...	...
77-86	M, N Chassis - 114" BBC Conventional & 108" BBC Aluminum Conventional Cab with Rear GM Air-Ride Suspension (4 Req'd)	3171069	○|○	85304	...		...	...
		22012065	○|○	85304	...		...	...
		22046483	○|○	85304	...		...	...
		22052336	○|○	85304	...		...	...
	Additional O.E.M. Interchanges	97-2210-00164	–|–	85708				
		97-2210-00170		85733	...		...	...
		507-3	○|○	85307				
		5073	○|○	85307				
		684280	○|○	83209 or 89414				
		3171696	○|○	85307				
		3172948	○|○	85303 or 89422				
		3178157	○|○	85700				
		3178233	○|○	85734				
		3178507	○|○	85700				
		3178995	○|○	85700				
		3188626	○|○	85300 or 89419				
		3188729	○|○	85303 or 89422				
		4939852	○|○	85308 or 89422				
		4939967		...	...	○|○	85308	89422
		4940601	○|○	83216				
		4940627	○|○	83203 or 89436				
		4940640	○|○	83216				
		4940650	○|○	83207 or 89407				
		4940654	○|○	83216				
		4940660	○|○	83207 or 89407				
		4963844	○|○	85307				
		4974401	○|○	85700				
		4975429	○|○	85300 or 89419				
		4975479	–|–	83400	...		...	...
		4975480	–|–	83400	...		...	...
		4975516	○|○	85702				
		4975518		...	...	○|○	85704	...
		4975538	○|○	85700				
		4975549	○|○	83216	...		...	...
		4975550	○|○	85702				

APPLICATION GUIDE - TRUCKS, TRAILERS AND BUSES

CHEVROLET TRUCK (ALSO SEE GMC TRUCK) (CONT'D)

Year Ano Année	Model Modelo Modle	OEM #	Front			Rear	
			Fleetline	GasSLX		Fleetline	GasSLX
	Additional O.E.M. Interchanges	5171068	83216				
		5316784	85700				
		5316791	83219				
		5316792	85305				
		5316793	85305				
		5321920	85307				
		5321929	85307				
		5348631	83203 or 89436				
		5352858	85305				
		5353054	85303	89422		...	...
		5355798	85307				
		5357955	85300 or 89419				
		5357956	85734				
		5357959	85300 or 89419				
		5361994	85734				
		5374779	85308 or 89422				
		5374999	85307				
		5385939	85307				
		5392387	85303	89422		...	...
		5394448	85305				
		5394467	85305				
		5455798	85307				
		5513489	83216				
		5513716	85304				
		5516459	85305				
		5522794	85308 or 89422				
		5522818	85305				
		5527001	85300 or 89419				
		5527271	85700				
		5527272	85700				
		5527606	85305				
		5531027	85301				
		5531435	85307				
		5531436	85307				
		5531437	85307				
		5532026	85304	...		...	...
		5532425	83207 or 89407				
		5532433	83207 or 89407				
		5532675	...	...		85307	...
		5534430	85303 or 89422				
		5534439	85304				
		5534447	85303 or 89422				
		5544112	83216				
		5544581	85302 or 89420				
		5544716	85304				
		5544717	85304				
		5544812	83308				
		5549899	83207 or 89407				
		5549924	85700				
		5549925	85304	...		...	...
		5552111	85304				
		5552112	85307				
		5552114	83216				
		5552206	83214				
		5552209	83215				

APPLICATION GUIDE - TRUCKS, TRAILERS AND BUSES

Year Ano Année	Model Modelo Modle	OEM #		Front			Rear	
				Fleetline	GasSLX		Fleetline	GasSLX
CHEVROLET TRUCK (ALSO SEE GMC TRUCK) (CONT'D)								
	Additional O.E.M. Interchanges	5552210	O|O	85308 or 89422				
		5552244	O|O	85308 or 89422				
		5552285	O|O	83214				
		5552453	O|O	85301				
		5554184	O|O	85302 or 89420				
		5554589	O|O	85307				
		5554596		...	...	O|O	85303	89422
		5554814	O|O	85302 or 89420				
		5554959	O|O	83401	...		...	...
		5554995	O|O	85305				
		5559363	O|O	83203 or 89436				
		5585939	O|O	85307				
		22007703	O|O	83303	...		...	...
		22012067	O|O	85700	...		...	...
		22012082	O|O	85702				
		22012083	–|O	85711				
		22012114	O|O	85700	...		...	...
		22012131	–|O	85711				
		22045526		...	...	O|O	85702	...
		22046481	O|O	85702				
		22052014		...	...	O|O	85702	...
		97221000164	–|–	85708				
		97221000170		85733	...		...	...
	Models with O.E.M. Number	22046489	O|O	85303	89422		...	...
		22065218	O|O	G63347	...		...	...
		22065251	O|O	85030	89440		...	...
CHRYSLER								
MOTORHOME CHASSIS								
63-72	M-300, M-375 & R-375 Motorhome Chassis	2961043		...	...	O|O	G63183	...
		3633744		...	...	O|O	G63183	...
73-81	M & R-300, 400, 500 Motorhome Chassis	3638112		...	...	O|O	G63183	...
CLARK EQUIPMENT								
	Model 130885 (Air Suspension)	5532675		...	...	O|O	85307	...
	Ross Carrier	355778	O|O	85315	...		...	...
		680042	O|O	85301	...		...	...
CNH GLOBAL NV								
	Models with O.E.M. Number	87268250	O|O	83021				
CNH GLOBAL N V								
	Models with O.E.M. Number	87019546	O|O	83022				
COACH HOUSE								
PLATINUM								
04-20	MotorHomes with Ford E450 Chassis	8C2Z18124D	–|O	G63622	...		...	...
		8C2Z18125D		...	...	–|O	G63623	...
		8C2Z-18124-D	–|O	G63622	...		...	...
		8C2Z-18125-D		...	...	–|O	G63623	...
		8C24-18045-DA	–|O	G63622	...		...	...
		8C24-18080-DB		...	...	–|O	G63623	...
		8C2418045DA	–|O	G63622	...		...	...
		8C2418080DB		...	...	–|O	G63623	...
		ASH1136		...	...	–|O	G63623	...

Year Ano Année	Model Modelo Modle	OEM #		Front			Rear	
				Fleetline	GasSLX		Fleetline	GasSLX
COACH HOUSE (CONT'D)								
PLATINUM (cont'd)								
04-20	MotorHomes with Ford E450 Chassis	ASH1154	−|O	**G63622**	...		...	...
		ASH-1136		...	...	−|O	**G63623**	...
		ASH-1154	−|O	**G63622**	...		...	...
		AT163G	−|O	**G63622**	...		...	...
		AT164G		...	...	−|O	**G63623**	...
		AT-163G	−|O	**G63622**	...		...	...
		AT-164G		...	...	−|O	**G63623**	...
21-22	Motorhomes with Ford E450 Chassis	8C2Z18124D	−|O	**G63622**	...		...	...
		8C2Z18125D		...	...	−|O	**G63623**	...
		8C2Z-18124-D	−|O	**G63622**	...		...	...
		8C2Z-18125-D		...	...	−|O	**G63623**	...
		8C24-18045-DA	−|O	**G63622**	...		...	...
		8C24-18080-DB		...	...	−|O	**G63623**	...
		8C2418045DA	−|O	**G63622**	...		...	...
		8C2418080DB		...	...	−|O	**G63623**	...
		ASH1136		...	...	−|O	**G63623**	...
		ASH1154	−|O	**G63622**	...		...	...
		ASH-1136		...	...	−|O	**G63623**	...
		ASH-1154	−|O	**G63622**	...		...	...
		AT163G	−|O	**G63622**	...		...	...
		AT164G		...	...	−|O	**G63623**	...
		AT-163G	−|O	**G63622**	...		...	...
		AT-164G		...	...	−|O	**G63623**	...
COACHMEN								
AURORA								
04-09	MotorHomes with Ford F53 Chassis with 16,000 lb GVW to 22,000 lb GVW	1C34-18045-AA	O|O	**83209**	**89414**		...	...
		1C34-18045-JA	O|O	**83209**	**89414**		...	...
		1C3418045AA	O|O	**83209**	**89414**		...	...
		1C3418045JA	O|O	**83209**	**89414**		...	...
		9U9Z18124A	O|O	**83209**	**89414**		...	...
		9U9Z18125A		...	...	O|O	**83122**	**89406**
		9U9Z-18124-A	O|O	**83209**	**89414**		...	...
		9U9Z-18125-A		...	...	O|O	**83122**	**89406**
		9U94-18045-AA	O|O	**83209**	**89414**		...	...
		9U94-18080-AA		...	...	O|O	**83122**	**89406**
		9U9418045AA	O|O	**83209**	**89414**		...	...
		9U9418080AA		...	...	O|O	**83122**	**89406**
		ASH137		...	...	O|O	**83122**	**89406**
		ASH294	O|O	**83209**	**89414**		...	...
		ASH1022	O|O	**83209**	**89414**		...	...
		ASH1023		...	...	O|O	**83122**	**89406**
		ASH1205	O|O	**83209**	**89414**		...	...
		ASH1206		...	...	O|O	**83122**	**89406**
		ASH1228	O|O	**83209**	**89414**		...	...
		ASH1229	O|O	**83209**	**89414**		...	...
		ASH1230		...	...	O|O	**83122**	**89406**
		ASH25822	O|O	**83209**	**89414**		...	...
		ASH25823	O|O	**83209**	**89414**		...	...
		ASH25824		...	...	O|O	**83122**	**89406**
		ASH-137		...	...	O|O	**83122**	**89406**
		ASH-294	O|O	**83209**	**89414**		...	...
		ASH-1022	O|O	**83209**	**89414**		...	...

Year Ano Année	Model Modelo Modle	OEM #		Front			Rear	
				Fleetline	GasSLX		Fleetline	GasSLX
COACHMEN (CONT'D)								
AURORA (cont'd)								
04-09	MotorHomes with Ford F53 Chassis with 16,000 lb GVW to 22,000 lb GVW	ASH-1023		...	...	○|○	83122	89406
		ASH-1205	○|○	83209	89414		...	...
		ASH-1206		...	...	○|○	83122	89406
		ASH-1228	○|○	83209	89414		...	...
		ASH-1229	○|○	83209	89414		...	...
		ASH-1230		...	...	○|○	83122	89406
		ASH-25822	○|○	83209	89414		...	...
		ASH-25823	○|○	83209	89414		...	...
		ASH-25824		...	...	○|○	83122	89406
		AT620	○|○	83209	89414		...	...
		AT621		...	...	○|○	83122	89406
		AT766	○|○	83209	89414		...	...
		AT-620	○|○	83209	89414		...	...
		AT-621		...	...	○|○	83122	89406
		AT-766	○|○	83209	89414		...	...
CATALINA								
	MotorHomes with Ford E350 or E450 Chassis	8C2Z18124D	−|○	G63622	...		...	...
		8C2Z18125D		...	...	−|○	G63623	...
		8C2Z-18124-D	−|○	G63622	...		...	...
		8C2Z-18125-D		...	...	−|○	G63623	...
		8C24-18045-DA	−|○	G63622	...		...	...
		8C24-18080-DB		...	...	−|○	G63623	...
		8C2418045DA	−|○	G63622	...		...	...
		8C2418080DB		...	...	−|○	G63623	...
		ASH1136		...	...	−|○	G63623	...
		ASH1154	−|○	G63622	...		...	...
		ASH-1136		...	...	−|○	G63623	...
		ASH-1154	−|○	G63622	...		...	...
		AT163G	−|○	G63622	...		...	...
		AT164G		...	...	−|○	G63623	...
		AT-163G	−|○	G63622	...		...	...
		AT-164G		...	...	−|○	G63623	...
CLASS A MOTORHOMES								
	MotorHomes with Freightliner XC Chassis	66153-002	○|○	83124	89407		...	...
		66153002	○|○	83124	89407		...	...
		F4BE5C832MO	○|○	83124	89407		...	...
		F4-BE5-C832-MO	○|○	83124	89407		...	...
CONCORD								
04-20	MotorHomes with Ford E350 or E450 Chassis	8C2Z18124D	−|○	G63622	...		...	...
		8C2Z18125D		...	...	−|○	G63623	...
		8C2Z-18124-D	−|○	G63622	...		...	...
		8C2Z-18125-D		...	...	−|○	G63623	...
		8C24-18045-DA	−|○	G63622	...		...	...
		8C24-18080-DB		...	...	−|○	G63623	...
		8C2418045DA	−|○	G63622	...		...	...
		8C2418080DB		...	...	−|○	G63623	...
		ASH1136		...	...	−|○	G63623	...
		ASH1154	−|○	G63622	...		...	...
		ASH-1136		...	...	−|○	G63623	...
		ASH-1154	−|○	G63622	...		...	...
		AT163G	−|○	G63622	...		...	...

APPLICATION GUIDE - TRUCKS, TRAILERS AND BUSES

Year Ano Année	Model Modelo Modle	OEM #		Front			Rear	
				Fleetline	GasSLX		Fleetline	GasSLX

COACHMEN (CONT'D)

CONCORD (cont'd)

04-20	MotorHomes with Ford E350 or E450 Chassis	AT164G		...	...	−|○	G63623	...
		AT-163G	−|○	G63622	...		...	...
		AT-164G		...	...	−|○	G63623	...

CROSS COUNTRY

2006	MotorHomes with Freightliner XC Chassis	16-16736-000		...	...	○|○	85029	...
		16-16737-000	○|○	83160	...		...	...
		16-16873-000		...	...	○|○	85029	...
		16-16874-000	○|○	83160	...		...	...
		16-18103-000	−|−	85900	...		...	...
		1616736000		...	...	○|○	85029	...
		1616737000	○|○	83160	...		...	...
		1616873000		...	...	○|○	85029	...
		1616874000	○|○	83160	...		...	...
		1618103000	−|−	85900	...		...	...
		141700131809		...	...	○|○	85029	...
		141700131810	○|○	83160	...		...	...
		481700000493	−|−	85900	...		...	...

CROSS COUNTRY ELITE

03-05	MotorHomes with Freightliner XC Chassis	16-16736-000		...	...	○|○	85029	...
		16-16737-000	○|○	83160	...		...	...
		16-16873-000		...	...	○|○	85029	...
		16-16874-000	○|○	83160	...		...	...
		16-18103-000	−|−	85900	...		...	...
		1616736000		...	...	○|○	85029	...
		1616737000	○|○	83160	...		...	...
		1616873000		...	...	○|○	85029	...
		1616874000	○|○	83160	...		...	...
		1618103000	−|−	85900	...		...	...
		141700131809		...	...	○|○	85029	...
		141700131810	○|○	83160	...		...	...
		481700000493	−|−	85900	...		...	...

CROSS COUNTRY SE

03-05	MotorHomes with Freightliner XC Chassis	16-16736-000		...	...	○|○	85029	...
		16-16737-000	○|○	83160	...		...	...
		16-16873-000		...	...	○|○	85029	...
		16-16874-000	○|○	83160	...		...	...
		16-18103-000	−|−	85900	...		...	...
		1616736000		...	...	○|○	85029	...
		1616737000	○|○	83160	...		...	...
		1616873000		...	...	○|○	85029	...
		1616874000	○|○	83160	...		...	...
		1618103000	−|−	85900	...		...	...
		141700131809		...	...	○|○	85029	...
		141700131810	○|○	83160	...		...	...
		481700000493	−|−	85900	...		...	...

ENCOUNTER

11-16	MotorHomes with Ford F53 Chassis with 16,000 lb GVW to 22,000 lb GVW	1C34-18045-AA	○|○	83209	89414		...	...
		1C34-18045-JA	○|○	83209	89414		...	...
		1C3418045AA	○|○	83209	89414		...	...
		1C3418045JA	○|○	83209	89414		...	...

COACHMEN (CONT'D)

ENCOUNTER (cont'd)

Year Ano Année	Model Modelo Modle	OEM #	Front Fleetline	Front GasSLX	Rear Fleetline	Rear GasSLX
11-16	MotorHomes with Ford F53 Chassis with 16,000 lb GVW to 22,000 lb GVW	9U9Z18124A	83209	89414	...	...
		9U9Z18125A	...	...	83122	89406
		9U9Z-18124-A	83209	89414	...	...
		9U9Z-18125-A	...	...	83122	89406
		9U94-18045-AA	83209	89414	...	...
		9U94-18080-AA	...	...	83122	89406
		9U9418045AA	83209	89414	...	...
		9U9418080AA	...	...	83122	89406
		ASH137	...	...	83122	89406
		ASH294	83209	89414	...	...
		ASH1022	83209	89414	...	...
		ASH1023	...	...	83122	89406
		ASH1205	83209	89414	...	...
		ASH1206	...	...	83122	89406
		ASH1228	83209	89414	...	...
		ASH1229	83209	89414	...	...
		ASH1230	...	...	83122	89406
		ASH25822	83209	89414	...	...
		ASH25823	83209	89414	...	...
		ASH25824	...	...	83122	89406
		ASH-137	...	...	83122	89406
		ASH-294	83209	89414	...	...
		ASH-1022	83209	89414	...	...
		ASH-1023	...	...	83122	89406
		ASH-1205	83209	89414	...	...
		ASH-1206	...	...	83122	89406
		ASH-1228	83209	89414	...	...
		ASH-1229	83209	89414	...	...
		ASH-1230	...	...	83122	89406
		ASH-25822	83209	89414	...	...
		ASH-25823	83209	89414	...	...
		ASH-25824	...	...	83122	89406
		AT620	83209	89414	...	...
		AT621	...	...	83122	89406
		AT766	83209	89414	...	...
		AT-620	83209	89414	...	...
		AT-621	...	...	83122	89406
		AT-766	83209	89414	...	...

FREEDOM EXPRESS

Year Ano Année	Model Modelo Modle	OEM #	Front Fleetline	Front GasSLX	Rear Fleetline	Rear GasSLX
04-09	MotorHomes with Ford E350 or E450 Chassis	8C2Z18124D	G63622	...	...	...
		8C2Z18125D	...	...	G63623	...
		8C2Z-18124-D	G63622	...	...	...
		8C2Z-18125-D	...	...	G63623	...
		8C24-18045-DA	G63622	...	...	...
		8C24-18080-DB	...	...	G63623	...
		8C2418045DA	G63622	...	...	...
		8C2418080DB	...	...	G63623	...
		ASH1136	...	...	G63623	...
		ASH1154	G63622	...	...	...
		ASH-1136	...	...	G63623	...
		ASH-1154	G63622	...	...	...
		AT163G	G63622	...	...	...
		AT164G	...	...	G63623	...

COACHMEN (CONT'D)

FREEDOM EXPRESS (cont'd)

Year Ano Année	Model Modelo Modle	OEM #	Front Fleetline	Front GasSLX	Rear Fleetline	Rear GasSLX
04-09	MotorHomes with Ford E350 or E450 Chassis	AT-163G	G63622	...	...	...
		AT-164G	...	...	G63623	...

FREELANDER

Year Ano Année	Model Modelo Modle	OEM #	Front Fleetline	Front GasSLX	Rear Fleetline	Rear GasSLX
03-21	MotorHomes with Ford E350 or E450 Chassis	8C2Z18124D	G63622	...	...	...
		8C2Z18125D	...	...	G63623	...
		8C2Z-18124-D	G63622	...	...	...
		8C2Z-18125-D	...	...	G63623	...
		8C24-18045-DA	G63622	...	...	...
		8C24-18080-DB	...	...	G63623	...
		8C2418045DA	G63622	...	...	...
		8C2418080DB	...	...	G63623	...
		ASH1136	...	...	G63623	...
		ASH1154	G63622	...	...	...
		ASH-1136	...	...	G63623	...
		ASH-1154	G63622	...	...	...
		AT163G	G63622	...	...	...
		AT164G	...	...	G63623	...
		AT-163G	G63622	...	...	...
		AT-164G	...	...	G63623	...

LEPRECHAUN

Year Ano Année	Model Modelo Modle	OEM #	Front Fleetline	Front GasSLX	Rear Fleetline	Rear GasSLX
03-21	MotorHomes with Ford E350 or E450 Chassis	8C2Z18124D	G63622	...	...	...
		8C2Z18125D	...	...	G63623	...
		8C2Z-18124-D	G63622	...	...	...
		8C2Z-18125-D	...	...	G63623	...
		8C24-18045-DA	G63622	...	...	...
		8C24-18080-DB	...	...	G63623	...
		8C2418045DA	G63622	...	...	...
		8C2418080DB	...	...	G63623	...
		ASH1136	...	...	G63623	...
		ASH1154	G63622	...	...	...
		ASH-1136	...	...	G63623	...
		ASH-1154	G63622	...	...	...
		AT163G	G63622	...	...	...
		AT164G	...	...	G63623	...
		AT-163G	G63622	...	...	...
		AT-164G	...	...	G63623	...

MIRADA

Year Ano Année	Model Modelo Modle	OEM #	Front Fleetline	Front GasSLX	Rear Fleetline	Rear GasSLX
99-22	MotorHomes with Ford F53 Chassis with 16,000 lb GVW to 22,000 lb GVW	1C34-18045-AA	83209	89414	...	...
		1C34-18045-JA	83209	89414	...	...
		1C3418045AA	83209	89414	...	...
		1C3418045JA	83209	89414	...	...
		9U9Z18124A	83209	89414	...	...
		9U9Z18125A	...	...	83122	89406
		9U9Z-18124-A	83209	89414	...	...
		9U9Z-18125-A	...	...	83122	89406
		9U94-18045-AA	83209	89414	...	...
		9U94-18080-AA	...	...	83122	89406
		9U9418045AA	83209	89414	...	...
		9U9418080AA	...	...	83122	89406
		ASH137	...	...	83122	89406
		ASH294	83209	89414	...	...

Year Ano Année	Model Modelo Modle	OEM #		Front			Rear	
				Fleetline	GasSLX		Fleetline	GasSLX

COACHMEN (CONT'D)

MIRADA (cont'd)

99-22	MotorHomes with Ford F53 Chassis with 16,000 lb GVW to 22,000 lb GVW	ASH1022	O|O	83209	89414		...	...
		ASH1023		...	...	O|O	83122	89406
		ASH1205	O|O	83209	89414		...	...
		ASH1206		...	...	O|O	83122	89406
		ASH1228	O|O	83209	89414		...	...
		ASH1229	O|O	83209	89414		...	...
		ASH1230		...	...	O|O	83122	89406
		ASH25822	O|O	83209	89414		...	...
		ASH25823	O|O	83209	89414		...	...
		ASH25824		...	...	O|O	83122	89406
		ASH-137		...	...	O|O	83122	89406
		ASH-294	O|O	83209	89414		...	...
		ASH-1022	O|O	83209	89414		...	...
		ASH-1023		...	...	O|O	83122	89406
		ASH-1205	O|O	83209	89414		...	...
		ASH-1206		...	...	O|O	83122	89406
		ASH-1228	O|O	83209	89414		...	...
		ASH-1229	O|O	83209	89414		...	...
		ASH-1230		...	...	O|O	83122	89406
		ASH-25822	O|O	83209	89414		...	...
		ASH-25823	O|O	83209	89414		...	...
		ASH-25824		...	...	O|O	83122	89406
		AT620	O|O	83209	89414		...	...
		AT621		...	...	O|O	83122	89406
		AT766	O|O	83209	89414		...	...
		AT-620	O|O	83209	89414		...	...
		AT-621		...	...	O|O	83122	89406
		AT-766	O|O	83209	89414		...	...

PATHFINDER

98-03	MotorHomes with Ford E350 or E450 Chassis	8C2Z18124D	–|O	G63622	...		...	...
		8C2Z18125D		...	...	–|O	G63623	...
		8C2Z-18124-D	–|O	G63622	...		...	...
		8C2Z-18125-D		...	...	–|O	G63623	...
		8C24-18045-DA	–|O	G63622	...		...	...
		8C24-18080-DB		...	...	–|O	G63623	...
		8C2418045DA	–|O	G63622	...		...	...
		8C2418080DB		...	...	–|O	G63623	...
		ASH1136		...	...	–|O	G63623	...
		ASH1154	–|O	G63622	...		...	...
		ASH-1136		...	...	–|O	G63623	...
		ASH-1154	–|O	G63622	...		...	...
		AT163G	–|O	G63622	...		...	...
		AT164G		...	...	–|O	G63623	...
		AT-163G	–|O	G63622	...		...	...
		AT-164G		...	...	–|O	G63623	...

PURSUIT

04-22	MotorHomes with Ford F53 Chassis with 16,000 lb GVW to 22,000 lb GVW	1C34-18045-AA	O|O	83209	89414		...	...
		1C34-18045-JA	O|O	83209	89414		...	...
		1C3418045AA	O|O	83209	89414		...	...
		1C3418045JA	O|O	83209	89414		...	...
		9U9Z18124A	O|O	83209	89414		...	...
		9U9Z18125A		...	...	O|O	83122	89406

Year Ano Année	Model Modelo Modle	OEM #		Front			Rear	
				Fleetline	GasSLX		Fleetline	GasSLX
COACHMEN (CONT'D)								
PURSUIT (cont'd)								
04-22	MotorHomes with Ford F53 Chassis with 16,000 lb GVW to 22,000 lb GVW	9U9Z-18124-A	O|O	**83209**	**89414**		...	...
		9U9Z-18125-A		...	...	O|O	**83122**	**89406**
		9U94-18045-AA	O|O	**83209**	**89414**		...	...
		9U94-18080-AA		...	...	O|O	**83122**	**89406**
		9U9418045AA	O|O	**83209**	**89414**		...	...
		9U9418080AA		...	...	O|O	**83122**	**89406**
		ASH137		...	...	O|O	**83122**	**89406**
		ASH294	O|O	**83209**	**89414**		...	...
		ASH1022	O|O	**83209**	**89414**		...	...
		ASH1023		...	...	O|O	**83122**	**89406**
		ASH1205	O|O	**83209**	**89414**		...	...
		ASH1206		...	...	O|O	**83122**	**89406**
		ASH1228	O|O	**83209**	**89414**		...	...
		ASH1229	O|O	**83209**	**89414**		...	...
		ASH1230		...	...	O|O	**83122**	**89406**
		ASH25822	O|O	**83209**	**89414**		...	...
		ASH25823	O|O	**83209**	**89414**		...	...
		ASH25824		...	...	O|O	**83122**	**89406**
		ASH-137		...	...	O|O	**83122**	**89406**
		ASH-294	O|O	**83209**	**89414**		...	...
		ASH-1022	O|O	**83209**	**89414**		...	...
		ASH-1023		...	...	O|O	**83122**	**89406**
		ASH-1205	O|O	**83209**	**89414**		...	...
		ASH-1206		...	...	O|O	**83122**	**89406**
		ASH-1228	O|O	**83209**	**89414**		...	...
		ASH-1229	O|O	**83209**	**89414**		...	...
		ASH-1230		...	...	O|O	**83122**	**89406**
		ASH-25822	O|O	**83209**	**89414**		...	...
		ASH-25823	O|O	**83209**	**89414**		...	...
		ASH-25824		...	...	O|O	**83122**	**89406**
		AT620	O|O	**83209**	**89414**		...	...
		AT621		...	...	O|O	**83122**	**89406**
		AT766	O|O	**83209**	**89414**		...	...
		AT-620	O|O	**83209**	**89414**		...	...
		AT-621		...	...	O|O	**83122**	**89406**
		AT-766	O|O	**83209**	**89414**		...	...
SANTARA								
99-06	MotorHomes with Ford E350 or E450 Chassis	8C2Z18124D	–|O	**G63622**	...		...	...
		8C2Z18125D		...	...	–|O	**G63623**	...
		8C2Z-18124-D	–|O	**G63622**	...		...	...
		8C2Z-18125-D		...	...	–|O	**G63623**	...
		8C24-18045-DA	–|O	**G63622**	...		...	...
		8C24-18080-DB		...	...	–|O	**G63623**	...
		8C2418045DA	–|O	**G63622**	...		...	...
		8C2418080DB		...	...	–|O	**G63623**	...
		ASH1136		...	...	–|O	**G63623**	...
		ASH1154	–|O	**G63622**	...		...	...
		ASH-1136		...	...	–|O	**G63623**	...
		ASH-1154	–|O	**G63622**	...		...	...
		AT163G	–|O	**G63622**	...		...	...
		AT164G		...	...	–|O	**G63623**	...
		AT-163G	–|O	**G63622**	...		...	...
		AT-164G		...	...	–|O	**G63623**	...

APPLICATION GUIDE - TRUCKS, TRAILERS AND BUSES

Year Ano Année	Model Modelo Modle	OEM #		Front			Rear	
				Fleetline	GasSLX		Fleetline	GasSLX
COLLINS BUS CORP								
19-22	Type A School Bus models with Ford E350 & E450 Chassis	ASH1154	−|O	**G63622**	...		...	...
		ASH-1154	−|O	**G63622**	...		...	...
	Type A School Bus models with Ford E350 & E450 Chassis To 2020	ASH1136		...	...	−|O	**G63623**	...
		ASH-1136		...	...	−|O	**G63623**	...
CONTINENTAL TRAILWAYS-EAGLE INTL								
	Buses with O.E.M. Number	01-0100-020	O|O	**85307**	...		...	...
		6-05-5	O|O	**85307**	...		...	...
		6055	O|O	**85307**	...		...	...
		5532026	O|O	**85304**	...		...	...
		010100020	O|O	**85307**	...		...	...
	Silver Eagle	01-0100-905	O|O	**85303**	**89422**		...	...
		70039	O|O	**85303**	**89422**		...	...
		70041	O|O	**85305**	...		...	...
		680091	O|O	**85303**	**89422**		...	...
		5394467	O|O	**85305**	...		...	...
		010100905	O|O	**85303**	**89422**		...	...
COUNTRY COACH								
	Models with O.E.M. Number	89406	O|O	**89406**	...		...	...
		89406		...	...	O|O	**89406**	...
		89414		...	...	O|O	**89414**	...
CRANE CARRIER								
	Additional O.E.M. Interchanges	277A12	O|O	**85304**				
		277A-12	O|O	**85304**				
		680088		...	...	O|O	**85713**	...
	Models with Hendrickson HMX 400 Haulmax (with 16.5" Saddle)	60680-004		...	...		**83143**	...
		60680-004L		...	...		**83143**	...
		64178-001		...	...		**83143**	...
		60680004		...	...		**83143**	...
		60680004L		...	...		**83143**	...
		64178001		...	...		**83143**	...
	Models with O.E.M. Number	227A14	O|O	**85716**	...		...	...
		227A-14	O|O	**85716**	...		...	...
		277A1	O|O	**85307**	...		...	...
		277A8	O|O	**85303**	**89422**		...	...
		277A9	O|O	**85307**	...		...	...
		277A13	O|O	**85302**	**89420**		...	...
		277A14	O|O	**85304**	...		...	...
		277A-1	O|O	**85307**	...		...	...
		277A-8	O|O	**85303**	**89422**		...	...
		277A-9	O|O	**85307**	...		...	...
		277A-13	O|O	**85302**	**89420**		...	...
		277A-14	O|O	**85304**	...		...	...
		680091	O|O	**85303**	**89422**		...	...
	Models with Ridewell RDS-209 Tandem Air Drive Suspension	1310002		...	...	O|O	**665937**	...
	Models with Ridewell Truck Air-Ride Suspension with O.E.M. Number	1265157B000		...	...	O|O	**85712**	...
CROWN COACH								
	All with Steel Spring Suspension	3188729	O|O	**85303**	**89422**		...	...
		5532026	O|O	**85304**	...		...	...
	Models with O.E.M. Number	5532036	O|O	**85734**	...		...	...
CUNHA PRODUCTS OHD								
	Truck Dollies	CP5222		...	...	O|O	**85315**	...

APPLICATION GUIDE - TRUCKS, TRAILERS AND BUSES

Year Ano Année	Model Modelo Modle	OEM #		Front			Rear	
				Fleetline	GasSLX		Fleetline	GasSLX
CUNHA PRODUCTS OHD (CONT'D)								
	Truck Dollies	CP-5222		...	...	O|O	85315	...
CUSH CORPORATION								
	Models with O.E.M. Number	C0227		...	...	O|O	85014	...
		C0228		...	...	O|O	85005	89430
TRAILER SUSPENSIONS - LOW MOUNT								
	25k UnderMount Econo 6/9	C0078		...	...	O|O	85000	89436
	CompacTrac 4.5/7 RH	C0078		...	...	O|O	85000	89436
	CP Competitor Series (U-Bolted) 25K & 30K	C0226		...	...	O|O	85064	...
	DiscMATE LowMount 25K Disc Brake	C0062D		...	...	O|O	85000	89436
		C0062-D		...	...	O|O	85000	89436
	Performance Yoke-8in 25K Undermount	C0062D		...	...	O|O	85000	89436
		C0062-D		...	...	O|O	85000	89436
	RideBest 25KHD 6	C0062D		...	...	O|O	85000	89436
		C0062-D		...	...	O|O	85000	89436
	RideBest 25KHD 8	C0062D		...	...	O|O	85000	89436
		C0062-D		...	...	O|O	85000	89436
	RideBest Yoke 25KHD 9	C0062D		...	...	O|O	85000	89436
		C0062-D		...	...	O|O	85000	89436
	RoughNeck, Cush Integrated, LowMount 25K	C0062D		...	...	O|O	85000	89436
		C0062-D		...	...	O|O	85000	89436
	RoughNeck Series, Cush Integrated, LowMount 30k	C0226		...	...	O|O	85064	...
TRAILER SUSPENSIONS - TOP MOUNT								
	CLT-25 CushLITE BigFOOT (245 Style)	C0078		...	...	O|O	85000	89436
	CLX25-317 CushLITE BigFOOT (317 style)	C0078		...	...	O|O	85000	89436
	CP Performance Top Mount	C0226		...	...	O|O	85064	...
	CT250TB Top Mount High Travel (U-Bolted)	C0226		...	...	O|O	85064	...
	DiscMATE 25K Roughneck Topmount	C0226		...	...	O|O	85064	...
	RideBest 25KHD TopMount 14-19	C0226		...	...	O|O	85064	...
	RideBest 25K TopMount	C0226		...	...	O|O	85064	...
	RoughNeck Series, Cush Integrated, TopMount 25K	C04045		...	...	O|O	85045	...
	RoughNeck Series, Cush Integrated, TopMount 30K	C0226		...	...	O|O	85064	...
DAMON								
CHALLENGER								
00-14	MotorHomes with Ford F53 Chassis with 16,000 lb GVW to 22,000 lb GVW	1C34-18045-AA	O|O	83209	89414		...	...
		1C34-18045-JA	O|O	83209	89414		...	...
		1C3418045AA	O|O	83209	89414		...	...
		1C3418045JA	O|O	83209	89414		...	...
		9U9Z18124A	O|O	83209	89414		...	...
		9U9Z18125A		...	...	O|O	83122	89406
		9U9Z-18124-A	O|O	83209	89414		...	...
		9U9Z-18125-A		...	...	O|O	83122	89406
		9U94-18045-AA	O|O	83209	89414		...	...
		9U94-18080-AA		...	...	O|O	83122	89406
		9U9418045AA	O|O	83209	89414		...	...
		9U9418080AA		...	...	O|O	83122	89406
		ASH137		...	...	O|O	83122	89406
		ASH294	O|O	83209	89414		...	...
		ASH1022	O|O	83209	89414		...	...
		ASH1023		...	...	O|O	83122	89406
		ASH1205	O|O	83209	89414		...	...
		ASH1206		...	...	O|O	83122	89406
		ASH1228	O|O	83209	89414		...	...

APPLICATION GUIDE - TRUCKS, TRAILERS AND BUSES

DAMON (CONT'D)

CHALLENGER (cont'd)

Year Ano Année	Model Modelo Modle	OEM #		Front			Rear	
				Fleetline	GasSLX		Fleetline	GasSLX
00-14	MotorHomes with Ford F53 Chassis with 16,000 lb GVW to 22,000 lb GVW	ASH1229	O|O	83209	89414		...	...
		ASH1230		...	...	O|O	83122	89406
		ASH25822	O|O	83209	89414		...	...
		ASH25823	O|O	83209	89414		...	...
		ASH25824		...	...	O|O	83122	89406
		ASH-137		...	...	O|O	83122	89406
		ASH-294	O|O	83209	89414		...	...
		ASH-1022	O|O	83209	89414		...	...
		ASH-1023		...	...	O|O	83122	89406
		ASH-1205	O|O	83209	89414		...	...
		ASH-1206		...	...	O|O	83122	89406
		ASH-1228	O|O	83209	89414		...	...
		ASH-1229	O|O	83209	89414		...	...
		ASH-1230		...	...	O|O	83122	89406
		ASH-25822	O|O	83209	89414		...	...
		ASH-25823	O|O	83209	89414		...	...
		ASH-25824		...	...	O|O	83122	89406
		AT620	O|O	83209	89414		...	...
		AT621		...	...	O|O	83122	89406
		AT766	O|O	83209	89414		...	...
		AT-620	O|O	83209	89414		...	...
		AT-621		...	...	O|O	83122	89406
		AT-766	O|O	83209	89414		...	...

CLASS A MOTORHOMES

Year Ano Année	Model Modelo Modle	OEM #		Front			Rear	
				Fleetline	GasSLX		Fleetline	GasSLX
04-11	Models with Workhorse W20 , W22, & W24 MotorHome Chassis with O.E.M. Number	24-153256		...	...	– | –	85124	...
		24153256		...	...	– | –	85124	...
		F4BE5F325HO		...	...	– | –	85124	...
		F4-BE5-F325-HO		...	...	– | –	85124	...
		W0005663		...	...	– | –	85124	...
98-11	Models with Workhorse W20 , W22, & W24 MotorHome Chassis with O.E.M. Number 98 - 11	24-153249	O|O	85125	...		...	...
		24-186629	O|O	85125	...		...	...
		24153249	O|O	85125	...		...	...
		24186629	O|O	85125	...		...	...
		F4BE5A832MO	O|O	85125	...		...	...
		F4BE5B492HO	O|O	85125	...		...	...
		F4BE5F324HO	O|O	85125	...		...	...
		F4-BE5-A832-MO	O|O	85125	...		...	...
		F4-BE5-B492-HO	O|O	85125	...		...	...
		F4-BE5-F324-HO	O|O	85125	...		...	...
		W0005662	O|O	85125	...		...	...
		W0006254	O|O	85125	...		...	...

DAYBREAK

Year Ano Année	Model Modelo Modle	OEM #		Front			Rear	
				Fleetline	GasSLX		Fleetline	GasSLX
99-13	MotorHomes with Ford F53 Chassis with 16,000 lb GVW to 22,000 lb GVW	1C34-18045-AA	O|O	83209	89414		...	...
		1C34-18045-JA	O|O	83209	89414		...	...
		1C3418045AA	O|O	83209	89414		...	...
		1C3418045JA	O|O	83209	89414		...	...
		9U9Z18124A	O|O	83209	89414		...	...
		9U9Z18125A		...	...	O|O	83122	89406
		9U9Z-18124-A	O|O	83209	89414		...	...
		9U9Z-18125-A		...	...	O|O	83122	89406
		9U94-18045-AA	O|O	83209	89414		...	...

DAMON (CONT'D)

DAYBREAK (cont'd)

Year Ano Année	Model Modelo Modle	OEM #		Front Fleetline	Front GasSLX		Rear Fleetline	Rear GasSLX
99-13	MotorHomes with Ford F53 Chassis with 16,000 lb GVW to 22,000 lb GVW	9U94-18080-AA		...	...	O|O	83122	89406
		9U9418045AA	O|O	83209	89414		...	...
		9U9418080AA		...	...	O|O	83122	89406
		ASH137		...	...	O|O	83122	89406
		ASH294	O|O	83209	89414		...	...
		ASH1022	O|O	83209	89414		...	...
		ASH1023		...	...	O|O	83122	89406
		ASH1205	O|O	83209	89414		...	...
		ASH1206		...	...	O|O	83122	89406
		ASH1228	O|O	83209	89414		...	...
		ASH1229	O|O	83209	89414		...	...
		ASH1230		...	...	O|O	83122	89406
		ASH25822	O|O	83209	89414		...	...
		ASH25823	O|O	83209	89414		...	...
		ASH25824		...	...	O|O	83122	89406
		ASH-137		...	...	O|O	83122	89406
		ASH-294	O|O	83209	89414		...	...
		ASH-1022	O|O	83209	89414		...	...
		ASH-1023		...	...	O|O	83122	89406
		ASH-1205	O|O	83209	89414		...	...
		ASH-1206		...	...	O|O	83122	89406
		ASH-1228	O|O	83209	89414		...	...
		ASH-1229	O|O	83209	89414		...	...
		ASH-1230		...	...	O|O	83122	89406
		ASH-25822	O|O	83209	89414		...	...
		ASH-25823	O|O	83209	89414		...	...
		ASH-25824		...	...	O|O	83122	89406
		AT620	O|O	83209	89414		...	...
		AT621		...	...	O|O	83122	89406
		AT766	O|O	83209	89414		...	...
		AT-620	O|O	83209	89414		...	...
		AT-621		...	...	O|O	83122	89406
		AT-766	O|O	83209	89414		...	...

INTRUDER

Year Ano Année	Model Modelo Modle	OEM #		Front Fleetline	Front GasSLX		Rear Fleetline	Rear GasSLX
99-07	MotorHomes with Ford F53 Chassis with 16,000 lb GVW to 22,000 lb GVW	1C34-18045-AA	O|O	83209	89414		...	...
		1C34-18045-JA	O|O	83209	89414		...	...
		1C3418045AA	O|O	83209	89414		...	...
		1C3418045JA	O|O	83209	89414		...	...
		9U9Z18124A	O|O	83209	89414		...	...
		9U9Z18125A		...	...	O|O	83122	89406
		9U9Z-18124-A	O|O	83209	89414		...	...
		9U9Z-18125-A		...	...	O|O	83122	89406
		9U94-18045-AA	O|O	83209	89414		...	...
		9U94-18080-AA		...	...	O|O	83122	89406
		9U9418045AA	O|O	83209	89414		...	...
		9U9418080AA		...	...	O|O	83122	89406
		ASH137		...	...	O|O	83122	89406
		ASH294	O|O	83209	89414		...	...
		ASH1022	O|O	83209	89414		...	...
		ASH1023		...	...	O|O	83122	89406
		ASH1205	O|O	83209	89414		...	...
		ASH1206		...	...	O|O	83122	89406
		ASH1228	O|O	83209	89414		...	...

APPLICATION GUIDE - TRUCKS, TRAILERS AND BUSES

DAMON (CONT'D)

INTRUDER (cont'd)

Year Ano Année	Model Modelo Modle	OEM #		Front Fleetline	Front GasSLX		Rear Fleetline	Rear GasSLX
99-07	MotorHomes with Ford F53 Chassis with 16,000 lb GVW to 22,000 lb GVW	ASH1229	○|○	83209	89414		...	...
		ASH1230		...	...	○|○	83122	89406
		ASH25822	○|○	83209	89414		...	...
		ASH25823	○|○	83209	89414		...	...
		ASH25824		...	...	○|○	83122	89406
		ASH-137		...	...	○|○	83122	89406
		ASH-294	○|○	83209	89414		...	...
		ASH-1022	○|○	83209	89414		...	...
		ASH-1023		...	...	○|○	83122	89406
		ASH-1205	○|○	83209	89414		...	...
		ASH-1206		...	...	○|○	83122	89406
		ASH-1228	○|○	83209	89414		...	...
		ASH-1229	○|○	83209	89414		...	...
		ASH-1230		...	...	○|○	83122	89406
		ASH-25822	○|○	83209	89414		...	...
		ASH-25823	○|○	83209	89414		...	...
		ASH-25824		...	...	○|○	83122	89406
		AT620	○|○	83209	89414		...	...
		AT621		...	...	○|○	83122	89406
		AT766	○|○	83209	89414		...	...
		AT-620	○|○	83209	89414		...	...
		AT-621		...	...	○|○	83122	89406
		AT-766	○|○	83209	89414		...	...

OUTLAW

Year Ano Année	Model Modelo Modle	OEM #		Front Fleetline	Front GasSLX		Rear Fleetline	Rear GasSLX
07-14	MotorHomes with Ford F53 Chassis with 16,000 lb GVW to 22,000 lb GVW	1C34-18045-AA	○|○	83209	89414		...	...
		1C34-18045-JA	○|○	83209	89414		...	...
		1C3418045AA	○|○	83209	89414		...	...
		1C3418045JA	○|○	83209	89414		...	...
		9U9Z18124A	○|○	83209	89414		...	...
		9U9Z18125A		...	...	○|○	83122	89406
		9U9Z-18124-A	○|○	83209	89414		...	...
		9U9Z-18125-A		...	...	○|○	83122	89406
		9U94-18045-AA	○|○	83209	89414		...	...
		9U94-18080-AA		...	...	○|○	83122	89406
		9U9418045AA	○|○	83209	89414		...	...
		9U9418080AA		...	...	○|○	83122	89406
		ASH137		...	...	○|○	83122	89406
		ASH294	○|○	83209	89414		...	...
		ASH1022	○|○	83209	89414		...	...
		ASH1023		...	...	○|○	83122	89406
		ASH1205	○|○	83209	89414		...	...
		ASH1206		...	...	○|○	83122	89406
		ASH1228	○|○	83209	89414		...	...
		ASH1229	○|○	83209	89414		...	...
		ASH1230		...	...	○|○	83122	89406
		ASH25822	○|○	83209	89414		...	...
		ASH25823	○|○	83209	89414		...	...
		ASH25824		...	...	○|○	83122	89406
		ASH-137		...	...	○|○	83122	89406
		ASH-294	○|○	83209	89414		...	...
		ASH-1022	○|○	83209	89414		...	...
		ASH-1023		...	...	○|○	83122	89406
		ASH-1205	○|○	83209	89414		...	...

APPLICATION GUIDE - TRUCKS, TRAILERS AND BUSES

Year Ano Année	Model Modelo Modle	OEM #		Front			Rear	
				Fleetline	GasSLX		Fleetline	GasSLX
DAMON (CONT'D)								
OUTLAW (cont'd)								
07-14	MotorHomes with Ford F53 Chassis with 16,000 lb GVW to 22,000 lb GVW	ASH-1206		...	...		83122	89406
		ASH-1228		83209	89414		...	...
		ASH-1229		83209	89414		...	...
		ASH-1230		...	...		83122	89406
		ASH-25822		83209	89414		...	...
		ASH-25823		83209	89414		...	...
		ASH-25824		...	...		83122	89406
		AT620		83209	89414		...	...
		AT621		...	...		83122	89406
		AT766		83209	89414		...	...
		AT-620		83209	89414		...	...
		AT-621		...	...		83122	89406
		AT-766		83209	89414		...	...
DANA								
	Dana Smart Ride - RF and RS Models - 20,000 lb and 23,000 lb	SR1VJ100		...	...		85078	...
DEXTER AXLE								
TRAILER								
	86 AR / RS 1015, 1035, 3015, 3035 Slider Air Suspension	18165-01		...	...		85006	...
		1816501		...	...		85006	...
DIAMOND COACH								
SHUTTLE BUSES								
	All Shuttle buses with Ford E350 Chassis	8C2Z18124D		G63622	...		...	...
		8C2Z18125D		...	...		G63623	...
		8C2Z-18124-D		G63622	...		...	...
		8C2Z-18125-D		...	...		G63623	...
		8C24-18045-DA		G63622	...		...	...
		8C24-18080-DB		...	...		G63623	...
		8C2418045DA		G63622	...		...	...
		8C2418080DB		...	...		G63623	...
		ASH1136		...	...		G63623	...
		ASH1154		G63622	...		...	...
		ASH-1136		...	...		G63623	...
		ASH-1154		G63622	...		...	...
		AT163G		G63622	...		...	...
		AT164G		...	...		G63623	...
		AT-163G		G63622	...		...	...
		AT-164G		...	...		G63623	...
	All Shuttle buses with Ford E450 Chassis	8C2Z18124D		G63622	...		...	...
		8C2Z18125D		...	...		G63623	...
		8C2Z-18124-D		G63622	...		...	...
		8C2Z-18125-D		...	...		G63623	...
		8C24-18045-DA		G63622	...		...	...
		8C24-18080-DB		...	...		G63623	...
		8C2418045DA		G63622	...		...	...
		8C2418080DB		...	...		G63623	...
		ASH1136		...	...		G63623	...
		ASH1154		G63622	...		...	...
		ASH-1136		...	...		G63623	...
		ASH-1154		G63622	...		...	...
		AT163G		G63622	...		...	...

APPLICATION GUIDE - TRUCKS, TRAILERS AND BUSES

Year Ano Année	Model Modelo Modle	OEM #		Front			Rear	
				Fleetline	GasSLX		Fleetline	GasSLX
DIAMOND COACH (CONT'D)								
SHUTTLE BUSES (cont'd)								
	All Shuttle buses with Ford E450 Chassis	AT164G		...	...	–|O	**G63623**	...
		AT-163G	–|O	**G63622**	...		...	...
		AT-164G		...	...	–|O	**G63623**	...
DIAMOND-REO								
	Additional O.E.M. Interchanges	220S510		...	...	O|O	**85712**	...
		220-S5-10		...	...	O|O	**85712**	...
	All w/Velvet Ride Suspension	.....		...	...	O|O	**85307**	...
	C054, C088, C114, C116 w/FF Axle	220-55-1	O|O	**83214**	...		...	...
		220-55-6	O|O	**83214**	...		...	...
		220551	O|O	**83214**	...		...	...
		220556	O|O	**83214**	...		...	...
	C054, C088 w/FH or FL Axle	.....	O|O	**85307**	...		...	...
	C090, C090D, C101	220-55-2	O|O	**85304**	...		...	...
		220-55-7	O|O	**85304**	...		...	...
		220552	O|O	**85304**	...		...	...
		220557	O|O	**85304**	...		...	...
	C114, C116 w/FH or FL Axle	220-55-2	O|O	**85304**	...		...	...
		220-55-7	O|O	**85304**	...		...	...
		220552	O|O	**85304**	...		...	...
		220557	O|O	**85304**	...		...	...
	DC101	220-55-2	O|O	**85304**	...		...	...
		220-55-7	O|O	**85304**	...		...	...
		220552	O|O	**85304**	...		...	...
		220557	O|O	**85304**	...		...	...
DIAMOND T								
	Models with O.E.M. Number	5549925	O|O	**85304**	...		...	...
DODGE TRUCK								
D SERIES- CONVENTIONAL CAB 4 X 2								
74-78	D-500, D-600, D-700, D-800	3633643		...	...	O|O	**G63183**	...
1973	D-500, D-600, D-800	2516009		...	...	O|O	**G63183**	...
LN & LNT - CONVENTIONAL CAB								
64-72	LN, LV Models	2516009		...	...	O|O	**G63183**	...
LNT, LVT, NLT, VLT- TILT CAB 6 X 4								
64-73	LNT, LVT Models	2516009		...	...	O|O	**G63183**	...
LS & LT-STEEL TILT CAB								
73-75	LS-1000, LT-1000	2516009		...	...	O|O	**G63183**	...
MOTORHOME CHASSIS								
63-72	M-300, M-375 & R-375 Motorhome Chassis	2961043		...	...	O|O	**G63183**	...
		3633744		...	...	O|O	**G63183**	...
73-81	M & R-300, 400, 500 Motorhome Chassis	3638112		...	...	O|O	**G63183**	...
		3638631	O|O	**G63605**	...		...	...
77-81	M-6 Motorhome Chassis	3638112		...	...	O|O	**G63183**	...
		4036892	O|O	**G63605**	...		...	...
P SERIES - FORWARD CONTROL								
63-71	PC-500 and PC-600, PD-500 and PD-600	.....		...	...	O|O	**G63183**	...

APPLICATION GUIDE - TRUCKS, TRAILERS AND BUSES

Year Ano Année	Model Modelo Modle	OEM #		Front			Rear	
				Fleetline	GasSLX		Fleetline	GasSLX
DODGE TRUCK (CONT'D)								
P SERIES - FORWARD CONTROL (cont'd)								
63-78	P-400	.....		...	...	O|O	G63183	...
72-82	P-300	.....		...	...	O|O	G63183	...
SCHOOL BUSES								
61-71	S-400, S-500, S-600	.....		...	...	O|O	G63183	...
72-73	S-500, S-600	2516009		...	...	O|O	G63183	...
74-78	S-600, S-700	3633643		...	...	O|O	G63183	...
W-SERIES AND POWER WAGONS								
61-72	W-500, WT-500 Models	.....		...	...	O|O	G63183	...
74-78	W-600 Models	3633643		...	...	O|O	G63183	...
1973	W-600 Models	2516009		...	...	O|O	G63183	...
		2960707	O|O	G63183	...		...	...
DUPLEX TRUCK								
	Models with O.E.M. Number	7604-3371	O|O	83204	...		...	...
		59024	O|O	83204	...		...	...
		76043371	O|O	83204	...		...	...
DURA SUSPENSION								
	Models with O.E.M. Number	7604-3371		...	...	O|O	83204	...
		12866		...	...	O|O	83207	89407
		59024		...	...	O|O	83204	...
		59030		...	...	O|O	83203	89436
		665133		...	...	O|O	83203	89436
		665267		...	...	O|O	85029	...
		1080099		...	...	O|O	83203	89436
		76043371		...	...	O|O	83204	...
		A2212		...	...	O|O	85029	...
		A-2212		...	...	O|O	85029	...
DUTCHMEN RV								
CLASS C MOTORHOMES								
92-09	MotorHomes with Ford E350 Chassis	8C2Z18124D	-|O	G63622	...		...	...
		8C2Z18125D		...	...	-|O	G63623	...
		8C2Z-18124-D	-|O	G63622	...		...	...
		8C2Z-18125-D		...	...	-|O	G63623	...
		8C24-18045-DA	-|O	G63622	...		...	...
		8C24-18080-DB		...	...	-|O	G63623	...
		8C2418045DA	-|O	G63622	...		...	...
		8C2418080DB		...	...	-|O	G63623	...
		ASH1136		...	...	-|O	G63623	...
		ASH1154	-|O	G63622	...		...	...
		ASH-1136		...	...	-|O	G63623	...
		ASH-1154	-|O	G63622	...		...	...
		AT163G	-|O	G63622	...		...	...
		AT164G		...	...	-|O	G63623	...
		AT-163G	-|O	G63622	...		...	...
		AT-164G		...	...	-|O	G63623	...
92-09	MotorHomes with Ford E450 Chassis	8C2Z18124D	-|O	G63622	...		...	...
		8C2Z18125D		...	...	-|O	G63623	...
		8C2Z-18124-D	-|O	G63622	...		...	...
		8C2Z-18125-D		...	...	-|O	G63623	...
		8C24-18045-DA	-|O	G63622	...		...	...

APPLICATION GUIDE - TRUCKS, TRAILERS AND BUSES

Year Ano Année	Model Modelo Modle	OEM #		Front			Rear	
				Fleetline	GasSLX		Fleetline	GasSLX
DUTCHMEN RV (CONT'D)								
CLASS C MOTORHOMES (cont'd)								
92-09	MotorHomes with Ford E450 Chassis	8C24-18080-DB		...	...	−|o	G63623	...
		8C2418045DA	−|o	G63622	...		...	...
		8C2418080DB		...	...	−|o	G63623	...
		ASH1136		...	...	−|o	G63623	...
		ASH1154	−|o	G63622	...		...	...
		ASH-1136		...	...	−|o	G63623	...
		ASH-1154	−|o	G63622	...		...	...
		AT163G	−|o	G63622	...		...	...
		AT164G		...	...	−|o	G63623	...
		AT-163G	−|o	G63622	...		...	...
		AT-164G		...	...	−|o	G63623	...
JAMBOREE								
15-20	MotorHomes with Ford E350 Chassis	8C2Z18124D	−|o	G63622	...		...	...
		8C2Z18125D		...	...	−|o	G63623	...
		8C2Z-18124-D	−|o	G63622	...		...	...
		8C2Z-18125-D		...	...	−|o	G63623	...
		8C24-18045-DA	−|o	G63622	...		...	...
		8C24-18080-DB		...	...	−|o	G63623	...
		8C2418045DA	−|o	G63622	...		...	...
		8C2418080DB		...	...	−|o	G63623	...
		ASH1136		...	...	−|o	G63623	...
		ASH1154	−|o	G63622	...		...	...
		ASH-1136		...	...	−|o	G63623	...
		ASH-1154	−|o	G63622	...		...	...
		AT163G	−|o	G63622	...		...	...
		AT164G		...	...	−|o	G63623	...
		AT-163G	−|o	G63622	...		...	...
		AT-164G		...	...	−|o	G63623	...
15-20	MotorHomes with Ford E450 Chassis	8C2Z18124D	−|o	G63622	...		...	...
		8C2Z18125D		...	...	−|o	G63623	...
		8C2Z-18124-D	−|o	G63622	...		...	...
		8C2Z-18125-D		...	...	−|o	G63623	...
		8C24-18045-DA	−|o	G63622	...		...	...
		8C24-18080-DB		...	...	−|o	G63623	...
		8C2418045DA	−|o	G63622	...		...	...
		8C2418080DB		...	...	−|o	G63623	...
		ASH1136		...	...	−|o	G63623	...
		ASH1154	−|o	G63622	...		...	...
		ASH-1136		...	...	−|o	G63623	...
		ASH-1154	−|o	G63622	...		...	...
		AT163G	−|o	G63622	...		...	...
		AT164G		...	...	−|o	G63623	...
		AT-163G	−|o	G63622	...		...	...
		AT-164G		...	...	−|o	G63623	...
DYNAMAX CORP								
DX3								
13-22	Models with 8000 to 16000 lb Front Axle and Taperleaf Spring	10-13760-000	o|o	85959	...		...	...
		1013760000	o|o	85959	...		...	...
		471700002991	o|o	85959	...		...	...
		SDA471700002991	o|o	85959	...		...	...
13-22	Models with Airliner 21,000 lb Rear Air Suspension	16-15817-000		...	...	o|o	85724	89443

Year Ano Année	Model Modelo Modle	OEM #		Front			Rear	
				Fleetline	GasSLX		Fleetline	GasSLX

DYNAMAX CORP (CONT'D)

DX3 (cont'd)

13-22	Models with Airliner 21,000 lb Rear Air Suspension	16-18708-000		...	...	O|O	85724	89443
		680611		...	...	O|O	85724	89443
		1615817000		...	...	O|O	85724	89443
		1618708000		...	...	O|O	85724	89443
		471700002809		...	...	O|O	85724	89443
		481700006848		...	...	O|O	85724	89443
		SDA471700002809		...	...	O|O	85724	89443

DYNAQUEST

05-06	Models with Airliner 18,000 lb Rear Air Suspension	SDA471700002809		...	...	O|O	85724	89443
05-07	Models with 10000 to 12000 lb. Taper-leaf Spring Suspension	10-12390-000	O|O	85920	89503		...	...
		1012390000	O|O	85920	89503		...	...
05-07	Models with Airliner 18,000 lb Rear Air Suspension	16-15817-000		...	...	O|O	85724	89443
		16-18708-000		...	...	O|O	85724	89443
		680611		...	...	O|O	85724	89443
		1615817000		...	...	O|O	85724	89443
		1618708000		...	...	O|O	85724	89443
		471700002809		...	...	O|O	85724	89443
		481700006848		...	...	O|O	85724	89443

DYNAQUEST ST

09-14	Models with 8000 to 16000 lb Front Axle and Taperleaf Spring	10-13760-000	O|O	85959	...		...	...
		1013760000	O|O	85959	...		...	...
		471700002991	O|O	85959	...		...	...
		SDA471700002991	O|O	85959	...		...	...
09-14	Models with Airliner 18,000 lb Rear Air Suspension	16-15817-000		...	...	O|O	85724	89443
		16-18708-000		...	...	O|O	85724	89443
		680611		...	...	O|O	85724	89443
		1615817000		...	...	O|O	85724	89443
		1618708000		...	...	O|O	85724	89443
		471700002809		...	...	O|O	85724	89443
		481700006848		...	...	O|O	85724	89443
		SDA471700002809		...	...	O|O	85724	89443

DYNAQUEST XL

09-22	Models with 12000 lb to 20000 Front Axle	10-13809-000	O|O	85958	...		...	...
		1013809000	O|O	85958	...		...	...
		471700003920	O|O	85958	...		...	...
09-22	Models with FAS II (40,000 lb) Rear Air Suspension	16-15817-000		...	...	O|O	85724	89443
		16-18708-000		...	...	O|O	85724	89443
		680611		...	...	O|O	85724	89443
		1615817000		...	...	O|O	85724	89443
		1618708000		...	...	O|O	85724	89443
		471700002809		...	...	O|O	85724	89443
		481700006848		...	...	O|O	85724	89443
		SDA471700002809		...	...	O|O	85724	89443

EUROPA

21-22	Models with 8000 to 16000 lb Front Axle and Taperleaf Spring	10-13760-000	O|O	85959	...		...	...
		1013760000	O|O	85959	...		...	...
		471700002991	O|O	85959	...		...	...
		SDA471700002991	O|O	85959	...		...	...
21-22	Models with Airliner 21,000 lb Rear Air Suspension	16-15817-000		...	...	O|O	85724	89443
		16-18708-000		...	...	O|O	85724	89443

APPLICATION GUIDE - TRUCKS, TRAILERS AND BUSES

Year Ano Année	Model Modelo Modle	OEM #		Front			Rear	
				Fleetline	GasSLX		Fleetline	GasSLX
DYNAMAX CORP (CONT'D)								
EUROPA (cont'd)								
21-22	Models with Airliner 21,000 lb Rear Air Suspension	680611		...	...	○|○	85724	89443
		1615817000		...	...	○|○	85724	89443
		1618708000		...	...	○|○	85724	89443
		471700002809		...	...	○|○	85724	89443
		481700006848		...	...	○|○	85724	89443
		SDA471700002809		...	...	○|○	85724	89443
FORCE HD								
15-22	Models with 8000 to 16000 lb Front Axle and Taperleaf Spring	10-13760-000	○|○	85959	...		...	...
		1013760000	○|○	85959	...		...	...
		471700002991	○|○	85959	...		...	...
		SDA471700002991	○|○	85959	...		...	...
15-22	Models with Airliner 21,000 lb Rear Air Suspension	16-15817-000		...	...	○|○	85724	89443
		16-18708-000		...	...	○|○	85724	89443
		680611		...	...	○|○	85724	89443
		1615817000		...	...	○|○	85724	89443
		1618708000		...	...	○|○	85724	89443
		471700002809		...	...	○|○	85724	89443
		481700006848		...	...	○|○	85724	89443
		SDA471700002809		...	...	○|○	85724	89443
GRAND SPORT								
02-04	Models 23,000 lb Airliner Rear Air Suspension	16-15817-000		...	...	○|○	85724	89443
		16-18708-000		...	...	○|○	85724	89443
		680611		...	...	○|○	85724	89443
		1615817000		...	...	○|○	85724	89443
		1618708000		...	...	○|○	85724	89443
		471700002808		...	...	○|○	85724	89443
		471700002809		...	...	○|○	85724	89443
		481700006848		...	...	○|○	85724	89443
		SDA471700002809		...	...	○|○	85724	89443
02-04	Models with 12000 lb Taperleaf Front Suspension	10-13021-000	○|○	85918	89449		...	...
		10-13063-000	○|○	85918	89449		...	...
		10-13211-000	○|○	85918	89449		...	...
		10-13634-000	○|○	85918	89449		...	...
		10-13684-000	○|○	85918	89449		...	...
		1013021000	○|○	85918	89449		...	...
		1013063000	○|○	85918	89449		...	...
		1013211000	○|○	85918	89449		...	...
		1013634000	○|○	85918	89449		...	...
		1013684000	○|○	85918	89449		...	...
		471700000449	○|○	85918	89449		...	...
		471700131155	○|○	85918	89449		...	...
GRAND SPORT GT								
09-14	Models with 14,600 lb Taperleaf Front Suspension	10-13809-000	○|○	85958	...		...	...
		1013809000	○|○	85958	...		...	...
		SDA471700003920	○|○	85958	...		...	...
09-14	Models with Freightliner Airliner Rear Air Suspension	16-15817-000		...	...	○|○	85724	89443
		16-18708-000		...	...	○|○	85724	89443
		680611		...	...	○|○	85724	89443
		1615817000		...	...	○|○	85724	89443
		1618708000		...	...	○|○	85724	89443
		471700002809		...	...	○|○	85724	89443

APPLICATION GUIDE - TRUCKS, TRAILERS AND BUSES

Year Ano Année	Model Modelo Modle	OEM #		Front			Rear	
				Fleetline	GasSLX		Fleetline	GasSLX
DYNAMAX CORP (CONT'D)								
GRAND SPORT GT (cont'd)								
09-14	Models with Freightliner Airliner Rear Air Suspension	481700006848		...	...	O|O	85724	89443
		SDA471700002809		...	...	O|O	85724	89443
GRAND SPORT GT TOY HAULER								
07-08	390TH Models with 12000 lb Taperleaf Front Suspension	10-12390-000	O|O	85920	89503		...	...
		1012390000	O|O	85920	89503		...	...
07-08	410TH & 450TH Models with 12000 lb Taperleaf Front Suspension	10-13021-000	O|O	85918	89449		...	...
		10-13063-000	O|O	85918	89449		...	...
		10-13211-000	O|O	85918	89449		...	...
		10-13634-000	O|O	85918	89449		...	...
		10-13684-000	O|O	85918	89449		...	...
		1013021000	O|O	85918	89449		...	...
		1013063000	O|O	85918	89449		...	...
		1013211000	O|O	85918	89449		...	...
		1013634000	O|O	85918	89449		...	...
		1013684000	O|O	85918	89449		...	...
		471700000449	O|O	85918	89449		...	...
		471700131155	O|O	85918	89449		...	...
07-13	Models 21K or 23K Airliner Rear Air Suspension	16-15817-000		...	...	O|O	85724	89443
		16-18708-000		...	...	O|O	85724	89443
		680611		...	...	O|O	85724	89443
		1615817000		...	...	O|O	85724	89443
		1618708000		...	...	O|O	85724	89443
		471700002808		...	...	O|O	85724	89443
		471700002809		...	...	O|O	85724	89443
		481700006848		...	...	O|O	85724	89443
		SDA471700002809		...	...	O|O	85724	89443
09-13	390TH Models with 12000 lb Taperleaf Front Suspension	10-13760-000	O|O	85959	...		...	...
		1013760000	O|O	85959	...		...	...
		471700002991	O|O	85959	...		...	...
		SDA471700002991	O|O	85959	...		...	...
09-13	410TH & 450TH Models with 12000 lb Taperleaf Front Suspension	10-13809-000	O|O	85958	...		...	...
		1013809000	O|O	85958	...		...	...
		SDA471700003920	O|O	85958	...		...	...
GRAND SPORT M2								
03-07	Models with 10000 to 12000 lb. Taper-leaf Spring Suspension	10-12390-000	O|O	85920	89503		...	...
		1012390000	O|O	85920	89503		...	...
03-07	Models with Airliner 21,000 lb Rear Air Suspension	16-15817-000		...	...	O|O	85724	89443
		16-18708-000		...	...	O|O	85724	89443
		680611		...	...	O|O	85724	89443
		1615817000		...	...	O|O	85724	89443
		1618708000		...	...	O|O	85724	89443
		471700002809		...	...	O|O	85724	89443
		481700006848		...	...	O|O	85724	89443
		SDA471700002809		...	...	O|O	85724	89443
GRAND SPORT ULTRA								
07-08	Models with 14,000 lb Taperleaf Front Suspension	10-13021-000	O|O	85918	89449		...	...
		10-13063-000	O|O	85918	89449		...	...
		10-13211-000	O|O	85918	89449		...	...
		10-13634-000	O|O	85918	89449		...	...
		10-13684-000	O|O	85918	89449		...	...
		1013021000	O|O	85918	89449		...	...

Year Ano Année	Model Modelo Modle	OEM #		Front			Rear	
				Fleetline	GasSLX		Fleetline	GasSLX
DYNAMAX CORP (CONT'D)								
GRAND SPORT ULTRA (cont'd)								
07-08	Models with 14,000 lb Taperleaf Front Suspension	1013063000	O|O	**85918**	**89449**		...	...
		1013211000	O|O	**85918**	**89449**		...	...
		1013634000	O|O	**85918**	**89449**		...	...
		1013684000	O|O	**85918**	**89449**		...	...
		471700000449	O|O	**85918**	**89449**		...	...
		471700131155	O|O	**85918**	**89449**		...	...
07-14	Models 23,000 lb Airliner Rear Air Suspension	16-15817-000		...	...	O|O	**85724**	**89443**
		16-18708-000		...	...	O|O	**85724**	**89443**
		680611		...	...	O|O	**85724**	**89443**
		1615817000		...	...	O|O	**85724**	**89443**
		1618708000		...	...	O|O	**85724**	**89443**
		471700002808		...	...	O|O	**85724**	**89443**
		471700002809		...	...	O|O	**85724**	**89443**
		481700006848		...	...	O|O	**85724**	**89443**
		SDA471700002809		...	...	O|O	**85724**	**89443**
09-14	Models with 14,000 lb Taperleaf Front Suspension	10-13809-000	O|O	**85958**	...		...	...
		1013809000	O|O	**85958**	...		...	...
		SDA471700003920	O|O	**85958**	...		...	...
ISATA 4								
92-20	MotorHomes with Ford E350 or E450 Chassis	8C2Z18124D	–|O	**G63622**	...		...	...
		8C2Z18125D		...	...	–|O	**G63623**	...
		8C2Z-18124-D	–|O	**G63622**	...		...	...
		8C2Z-18125-D		...	...	–|O	**G63623**	...
		8C24-18045-DA	–|O	**G63622**	...		...	...
		8C24-18080-DB		...	...	–|O	**G63623**	...
		8C2418045DA	–|O	**G63622**	...		...	...
		8C2418080DB		...	...	–|O	**G63623**	...
		ASH1136		...	...	–|O	**G63623**	...
		ASH1154	–|O	**G63622**	...		...	...
		ASH-1136		...	...	–|O	**G63623**	...
		ASH-1154	–|O	**G63622**	...		...	...
		AT163G	–|O	**G63622**	...		...	...
		AT164G		...	...	–|O	**G63623**	...
		AT-163G	–|O	**G63622**	...		...	...
		AT-164G		...	...	–|O	**G63623**	...
EAGLE MOTOR COACH								
	Additional O.E.M. Interchanges	12J510		...	...		**85733**	...
		12J-5-10		...	...		**85733**	...
		0140100-905	O|O	**85308**	**89422**		...	...
		690060		...	...	O|O	**85713**	...
		0140100905	O|O	**85308**	**89422**		...	...
	Buses with Rubber Torsion Suspension	6-05-5		...	...	O|O	**85307**	...
		6055		...	...	O|O	**85307**	...
	Buses with Steel Spring Suspension	5532026	O|O	**85304**	...		...	...
	Models with O.E.M. Number	01-0100-020	O|O	**85307**	...		...	...
		01-0100-905	O|O	**85303**	**89422**		...	...
		014-0100-905	O|O	**85308**	**89422**		...	...
		154-0100-514	O|O	**85314**	**89425**		...	...
		70039	O|O	**85303**	**89422**		...	...
		70041	O|O	**85305**	...		...	...
		101364	O|O	**85305**	...		...	...
		680091	O|O	**85303**	**89422**		...	...

APPLICATION GUIDE - TRUCKS, TRAILERS AND BUSES

Year Ano Année	Model Modelo Modle	OEM #		Front			Rear	
				Fleetline	GasSLX		Fleetline	GasSLX
EAGLE MOTOR COACH (CONT'D)								
	Models with O.E.M. Number	5394467	O|O	85305	...		...	...
		010100020	O|O	85307	...		...	...
		010100905	O|O	85303	89422		...	...
		0140100905	O|O	85308	89422		...	...
		1540100514	O|O	85314	89425		...	...
EAST MANUFACTURING CORP.								
	Models with O.E.M. Number	517-05809-20		...	...	O|O	89437	...
		5170580920		...	...	O|O	89437	...
	Shocks with stamping number	A20002		...	...	O|O	85000	89436
		A20126		...	...	O|O	85323	89436
		A-20002		...	...	O|O	85000	89436
		A-20126		...	...	O|O	85323	89436
	Trailers with East Trailer part number	517-05001-18		...	...	O|O	87015	...
		517-05001-23		...	...	O|O	85005	89430
		517-05006-20		...	...	O|O	85030	89440
		517-05009-14		...	...	O|O	83125	...
		517-05010-07		...	...	O|O	83214	...
		517-05110-20		...	...	O|O	85000	89436
		517-05511-14		...	...	O|O	83128	89436
		517-05805-20		...	...	O|O	85000	89436
		517-05806-20		...	...	O|O	85029	...
		517-05808-20		...	...	O|O	85738	...
		517-05809-20		...	...	O|O	89437	...
		517-05916-14		...	...	O|O	83124	89407
		5170500118		...	...	O|O	87015	...
		5170500123		...	...	O|O	85005	89430
		5170500620		...	...	O|O	85030	89440
		5170500914		...	...	O|O	83125	...
		5170501007		...	...	O|O	83214	...
		5170511020		...	...	O|O	85000	89436
		5170551114		...	...	O|O	83128	89436
		5170580520		...	...	O|O	85000	89436
		5170580620		...	...	O|O	85029	...
		5170580820		...	...	O|O	85738	...
		5170580920		...	...	O|O	89437	...
		5170591614		...	...	O|O	83124	89407
ELDORADO NATIONAL								
ADVANTAGE								
	Shuttle Buses with Ford E350 or E450 Chassis	8C2Z18124D	-|O	G63622	...		...	...
		8C2Z18125D		...	...	-|O	G63623	...
		8C2Z-18124-D	-|O	G63622	...		...	...
		8C2Z-18125-D		...	...	-|O	G63623	...
		8C24-18045-DA	-|O	G63622	...		...	...
		8C24-18080-DB		...	...	-|O	G63623	...
		8C2418045DA	-|O	G63622	...		...	...
		8C2418080DB		...	...	-|O	G63623	...
		ASH1136		...	...	-|O	G63623	...
		ASH1154	-|O	G63622	...		...	...
		ASH-1136		...	...	-|O	G63623	...
		ASH-1154	-|O	G63622	...		...	...
		AT163G	-|O	G63622	...		...	...
		AT164G		...	...	-|O	G63623	...
		AT-163G	-|O	G63622	...		...	...

Year Ano Année	Model Modelo Modle	OEM #		Front			Rear	
				Fleetline	GasSLX		Fleetline	GasSLX
ELDORADO NATIONAL (CONT'D)								
ADVANTAGE (cont'd)								
	Shuttle Buses with Ford E350 or E450 Chassis	AT-164G		...	...	−|O	G63623	...
AEROLITE								
	Shuttle Buses with Ford E350 or E450 Chassis	8C2Z18124D	−|O	G63622	...		...	...
		8C2Z18125D		...	...	−|O	G63623	...
		8C2Z-18124-D	−|O	G63622	...		...	...
		8C2Z-18125-D		...	...	−|O	G63623	...
		8C24-18045-DA	−|O	G63622	...		...	...
		8C24-18080-DB		...	...	−|O	G63623	...
		8C2418045DA	−|O	G63622	...		...	...
		8C2418080DB		...	...	−|O	G63623	...
		ASH1136		...	...	−|O	G63623	...
		ASH1154	−|O	G63622	...		...	...
		ASH-1136		...	...	−|O	G63623	...
		ASH-1154	−|O	G63622	...		...	...
		AT163G	−|O	G63622	...		...	...
		AT164G		...	...	−|O	G63623	...
		AT-163G	−|O	G63622	...		...	...
		AT-164G		...	...	−|O	G63623	...
AEROTECH								
	Shuttle Buses with Ford E350 or E450 Chassis	8C2Z18124D	−|O	G63622	...		...	...
		8C2Z18125D		...	...	−|O	G63623	...
		8C2Z-18124-D	−|O	G63622	...		...	...
		8C2Z-18125-D		...	...	−|O	G63623	...
		8C24-18045-DA	−|O	G63622	...		...	...
		8C24-18080-DB		...	...	−|O	G63623	...
		8C2418045DA	−|O	G63622	...		...	...
		8C2418080DB		...	...	−|O	G63623	...
		ASH1136		...	...	−|O	G63623	...
		ASH1154	−|O	G63622	...		...	...
		ASH-1136		...	...	−|O	G63623	...
		ASH-1154	−|O	G63622	...		...	...
		AT163G	−|O	G63622	...		...	...
		AT164G		...	...	−|O	G63623	...
		AT-163G	−|O	G63622	...		...	...
		AT-164G		...	...	−|O	G63623	...
ENTEGRA COACH								
EMBLEM								
19-22	MotorHomes with Ford F53 Chassis with 16,000 lb GVW to 22,000 lb GVW	9U9Z18125A		...	...	O|O	83122	89406
		9U9Z-18125-A		...	...	O|O	83122	89406
		9U94-18080-AA		...	...	O|O	83122	89406
		9U9418080AA		...	...	O|O	83122	89406
		ASH137		...	...	O|O	83122	89406
		ASH1023		...	...	O|O	83122	89406
		ASH1206		...	...	O|O	83122	89406
		ASH1230		...	...	O|O	83122	89406
		ASH25822	O|O	83209	89414		...	...
		ASH25823	O|O	83209	89414		...	...
		ASH25824		...	...	O|O	83122	89406
		ASH-137		...	...	O|O	83122	89406
		ASH-1023		...	...	O|O	83122	89406

APPLICATION GUIDE - TRUCKS, TRAILERS AND BUSES

Year Ano Année	Model Modelo Modle	OEM #		Front			Rear	
				Fleetline	GasSLX		Fleetline	GasSLX

ENTEGRA COACH (CONT'D)

EMBLEM (cont'd)

19-22	MotorHomes with Ford F53 Chassis with 16,000 lb GVW to 22,000 lb GVW	ASH-1206		...	...	O|O	83122	89406
		ASH-1230		...	...	O|O	83122	89406
		ASH-25822	O|O	83209	89414		...	...
		ASH-25823	O|O	83209	89414		...	...
		ASH-25824		...	...	O|O	83122	89406
		AT621		...	...	O|O	83122	89406
		AT-621		...	...	O|O	83122	89406

ESTEEM

18-22	MotorHomes with Ford E350 or E450 Chassis	8C2Z18124D	–|O	G63622	...		...	...
		8C2Z18125D		...	...	–|O	G63623	...
		8C2Z-18124-D	–|O	G63622	...		...	...
		8C2Z-18125-D		...	...	–|O	G63623	...
		8C24-18045-DA	–|O	G63622	...		...	...
		8C24-18080-DB		...	...	–|O	G63623	...
		8C2418045DA	–|O	G63622	...		...	...
		8C2418080DB		...	...	–|O	G63623	...
		ASH1136		...	...	–|O	G63623	...
		ASH1154	–|O	G63622	...		...	...
		ASH-1136		...	...	–|O	G63623	...
		ASH-1154	–|O	G63622	...		...	...
		AT163G	–|O	G63622	...		...	...
		AT164G		...	...	–|O	G63623	...
		AT-163G	–|O	G63622	...		...	...
		AT-164G		...	...	–|O	G63623	...

ODYSSEY

18-22	MotorHomes with Ford E350 or E450 Chassis	8C2Z18124D	–|O	G63622	...		...	...
		8C2Z18125D		...	...	–|O	G63623	...
		8C2Z-18124-D	–|O	G63622	...		...	...
		8C2Z-18125-D		...	...	–|O	G63623	...
		8C24-18045-DA	–|O	G63622	...		...	...
		8C24-18080-DB		...	...	–|O	G63623	...
		8C2418045DA	–|O	G63622	...		...	...
		8C2418080DB		...	...	–|O	G63623	...
		ASH1136		...	...	–|O	G63623	...
		ASH1154	–|O	G63622	...		...	...
		ASH-1136		...	...	–|O	G63623	...
		ASH-1154	–|O	G63622	...		...	...
		AT163G	–|O	G63622	...		...	...
		AT164G		...	...	–|O	G63623	...
		AT-163G	–|O	G63622	...		...	...
		AT-164G		...	...	–|O	G63623	...

VISION

19-22	MotorHomes with Ford F53 Chassis with 16,000 lb GVW to 22,000 lb GVW	9U9Z18125A		...	...	O|O	83122	89406
		9U9Z-18125-A		...	...	O|O	83122	89406
		9U94-18080-AA		...	...	O|O	83122	89406
		9U9418080AA		...	...	O|O	83122	89406
		ASH137		...	...	O|O	83122	89406
		ASH1023		...	...	O|O	83122	89406
		ASH1206		...	...	O|O	83122	89406
		ASH1230		...	...	O|O	83122	89406
		ASH25822	O|O	83209	89414		...	...

APPLICATION GUIDE - TRUCKS, TRAILERS AND BUSES

Year Ano Année	Model Modelo Modle	OEM #		Front			Rear	
				Fleetline	GasSLX		Fleetline	GasSLX
ENTEGRA COACH (CONT'D)								
VISION (cont'd)								
19-22	MotorHomes with Ford F53 Chassis with 16,000 lb GVW to 22,000 lb GVW	ASH25823	○|○	83209	89414		...	...
		ASH25824		...	...	○|○	83122	89406
		ASH-137		...	...	○|○	83122	89406
		ASH-1023		...	...	○|○	83122	89406
		ASH-1206		...	...	○|○	83122	89406
		ASH-1230		...	...	○|○	83122	89406
		ASH-25822	○|○	83209	89414		...	...
		ASH-25823	○|○	83209	89414		...	...
		ASH-25824		...	...	○|○	83122	89406
		AT621		...	...	○|○	83122	89406
		AT-621		...	...	○|○	83122	89406
ESTEEM								
2017	MotorHomes with Ford E350 or E450 Chassis	8C2Z18124D	–|○	G63622	...		...	...
		8C2Z18125D		...	...	–|○	G63623	...
		8C2Z-18124-D	–|○	G63622	...		...	...
		8C2Z-18125-D		...	...	–|○	G63623	...
		8C24-18045-DA	–|○	G63622	...		...	...
		8C24-18080-DB		...	...	–|○	G63623	...
		8C2418045DA	–|○	G63622	...		...	...
		8C2418080DB		...	...	–|○	G63623	...
		ASH1136		...	...	–|○	G63623	...
		ASH1154	–|○	G63622	...		...	...
		ASH-1136		...	...	–|○	G63623	...
		ASH-1154	–|○	G63622	...		...	...
		AT163G	–|○	G63622	...		...	...
		AT164G		...	...	–|○	G63623	...
		AT-163G	–|○	G63622	...		...	...
		AT-164G		...	...	–|○	G63623	...
ODYSSEY								
2017	MotorHomes with Ford E350 or E450 Chassis	8C2Z18124D	–|○	G63622	...		...	...
		8C2Z18125D		...	...	–|○	G63623	...
		8C2Z-18124-D	–|○	G63622	...		...	...
		8C2Z-18125-D		...	...	–|○	G63623	...
		8C24-18045-DA	–|○	G63622	...		...	...
		8C24-18080-DB		...	...	–|○	G63623	...
		8C2418045DA	–|○	G63622	...		...	...
		8C2418080DB		...	...	–|○	G63623	...
		ASH1136		...	...	–|○	G63623	...
		ASH1154	–|○	G63622	...		...	...
		ASH-1136		...	...	–|○	G63623	...
		ASH-1154	–|○	G63622	...		...	...
		AT163G	–|○	G63622	...		...	...
		AT164G		...	...	–|○	G63623	...
		AT-163G	–|○	G63622	...		...	...
		AT-164G		...	...	–|○	G63623	...
E-ONE								
	AERM Models with 10K Front Leaf Spring	90-2572	○|○	85329	...		...	...
	AERM Models with 21K Front Taper-Leaf Spring	90-2572	○|○	85329	...		...	...
	PAEM Models with 19K Front Taper-Leaf Spring	90-2572	○|○	85329	...		...	...
	PMPR Models with 19K Front Taper-Leaf Spring	90-2572	○|○	85329	...		...	...
FEDERAL COACH								
02-08	Shuttle buses with Freightliner M2-106 Chassis	10-12388-000	○|○	85920	89503		...	...

APPLICATION GUIDE - TRUCKS, TRAILERS AND BUSES

Year Ano Année	Model Modelo Modle	OEM #		Front			Rear	
				Fleetline	GasSLX		Fleetline	GasSLX
FEDERAL COACH (CONT'D)								
02-08	Shuttle buses with Freightliner M2-106 Chassis	10-12390-000	O|O	85920	89503		...	...
		1012388000	O|O	85920	89503		...	...
		1012390000	O|O	85920	89503		...	...
02-19	Shuttle buses with Freightliner M2-106 Chassis	16-18708-000		...	...	O|O	85724	89443
		1618708000		...	...	O|O	85724	89443
		471700002809		...	...	O|O	85724	89443
09-19	Shuttle buses with Freightliner M2-106 Chassis	10-13760-000	O|O	85959	...		...	...
		1013760000	O|O	85959	...		...	...
		471700002991	O|O	85959	...		...	...
		SDA471700002991	O|O	85959	...		...	...
	Spirit Series Shuttle buses with Ford E450 Chassis To 2020	ASH1136		...	...	–|O	G63623	...
		ASH1154	–|O	G63622	...		...	...
		ASH-1136		...	...	–|O	G63623	...
		ASH-1154	–|O	G63622	...		...	...
FLEETWOOD								
AXON								
18-20	MotorHomes with Ford F53 Chassis with 16,000 lb GVW to 22,000 lb GVW	1C34-18045-AA	O|O	83209	89414		...	...
		1C34-18045-JA	O|O	83209	89414		...	...
		1C3418045AA	O|O	83209	89414		...	...
		1C3418045JA	O|O	83209	89414		...	...
		9U9Z18124A	O|O	83209	89414		...	...
		9U9Z-18124-A	O|O	83209	89414		...	...
		9U94-18045-AA	O|O	83209	89414		...	...
		9U9418045AA	O|O	83209	89414		...	...
		ASH294	O|O	83209	89414		...	...
		ASH1022	O|O	83209	89414		...	...
		ASH1205	O|O	83209	89414		...	...
		ASH1228	O|O	83209	89414		...	...
		ASH1229	O|O	83209	89414		...	...
		ASH25822	O|O	83209	89414		...	...
		ASH25823	O|O	83209	89414		...	...
		ASH-294	O|O	83209	89414		...	...
		ASH-1022	O|O	83209	89414		...	...
		ASH-1205	O|O	83209	89414		...	...
		ASH-1228	O|O	83209	89414		...	...
		ASH-1229	O|O	83209	89414		...	...
		ASH-25822	O|O	83209	89414		...	...
		ASH-25823	O|O	83209	89414		...	...
		AT620	O|O	83209	89414		...	...
		AT766	O|O	83209	89414		...	...
		AT-620	O|O	83209	89414		...	...
		AT-766	O|O	83209	89414		...	...
19-20	MotorHomes with Ford F53 Chassis with 16,000 lb GVW to 22,000 lb GVW	9U9Z18125A		...	...	O|O	83122	89406
		9U9Z-18125-A		...	...	O|O	83122	89406
		9U94-18080-AA		...	...	O|O	83122	89406
		ASH137		...	...	O|O	83122	89406
		ASH1023		...	...	O|O	83122	89406
		ASH1206		...	...	O|O	83122	89406
		ASH1230		...	...	O|O	83122	89406
		ASH25824		...	...	O|O	83122	89406
		ASH-137		...	...	O|O	83122	89406
		ASH-1023		...	...	O|O	83122	89406
		ASH-1206		...	...	O|O	83122	89406
		ASH-1230		...	...	O|O	83122	89406

Year Ano Année	Model Modelo Modle	OEM #		Front			Rear	
				Fleetline	GasSLX		Fleetline	GasSLX
FLEETWOOD (CONT'D)								
AXON (cont'd)								
19-20	MotorHomes with Ford F53 Chassis with 16,000 lb GVW to 22,000 lb GVW	ASH-25824		...	...	○|○	83122	89406
		AT621		...	...	○|○	83122	89406
		AT-621		...	...	○|○	83122	89406
2018	Models with O.E.M. Number	ASH25824		...	...	○|○	83122	89406
2019	MotorHomes with Ford F53 Chassis with 16,000 lb GVW to 22,000 lb GVW	9U9418080AA		...	...	○|○	83122	89406
BOUNDER								
02-06	Models with Freightliner XC Chassis with ZF - IFS Front Suspension and 23,000 lb GVW or Greater	16-18103-000	−|−	85900	...		...	...
		1618103000	−|−	85900	...		...	...
		481700000493	−|−	85900	...		...	...
02-06	MotorHomes with Freightliner XC Chassis and ADL200 Suspension w/ 20K Rear	16-16736-000		...	...	○|○	85029	...
		16-16873-000		...	...	○|○	85029	...
		1616736000		...	...	○|○	85029	...
		1616873000		...	...	○|○	85029	...
		141700131809		...	...	○|○	85029	...
02-06	MotorHomes with Freightliner XC Chassis and AS120 Front Suspension	16-16737-000	○|○	83160	...		...	...
		16-16874-000	○|○	83160	...		...	...
		1616737000	○|○	83160	...		...	...
		1616874000	○|○	83160	...		...	...
		141700131810	○|○	83160	...		...	...
00-22	MotorHomes with Ford F53 Chassis with 16,000 lb GVW to 22,000 lb GVW	1C34-18045-AA	○|○	83209	89414		...	...
		1C34-18045-JA	○|○	83209	89414		...	...
		1C3418045AA	○|○	83209	89414		...	...
		1C3418045JA	○|○	83209	89414		...	...
		9U9Z18124A	○|○	83209	89414		...	...
		9U9Z18125A		...	...	○|○	83122	89406
		9U9Z-18124-A	○|○	83209	89414		...	...
		9U9Z-18125-A		...	...	○|○	83122	89406
		9U94-18045-AA	○|○	83209	89414		...	...
		9U94-18080-AA		...	...	○|○	83122	89406
		9U9418045AA	○|○	83209	89414		...	...
		9U9418080AA		...	...	○|○	83122	89406
		ASH137		...	...	○|○	83122	89406
		ASH294	○|○	83209	89414		...	...
		ASH1022	○|○	83209	89414		...	...
		ASH1023		...	...	○|○	83122	89406
		ASH1205	○|○	83209	89414		...	...
		ASH1206		...	...	○|○	83122	89406
		ASH1228	○|○	83209	89414		...	...
		ASH1229	○|○	83209	89414		...	...
		ASH1230		...	...	○|○	83122	89406
		ASH25822	○|○	83209	89414		...	...
		ASH25823	○|○	83209	89414		...	...
		ASH25824		...	...	○|○	83122	89406
		ASH-137		...	...	○|○	83122	89406
		ASH-294	○|○	83209	89414		...	...
		ASH-1022	○|○	83209	89414		...	...
		ASH-1023		...	...	○|○	83122	89406
		ASH-1205	○|○	83209	89414		...	...
		ASH-1206		...	...	○|○	83122	89406
		ASH-1228	○|○	83209	89414		...	...
		ASH-1229	○|○	83209	89414		...	...
		ASH-1230		...	...	○|○	83122	89406

Year Ano Année	Model Modelo Modle	OEM #		Front			Rear	
				Fleetline	GasSLX		Fleetline	GasSLX
FLEETWOOD (CONT'D)								
BOUNDER (cont'd)								
00-22	MotorHomes with Ford F53 Chassis with 16,000 lb GVW to 22,000 lb GVW	ASH-25822	O|O	**83209**	**89414**		...	...
		ASH-25823	O|O	**83209**	**89414**		...	...
		ASH-25824		...	...	O|O	**83122**	**89406**
		AT620	O|O	**83209**	**89414**		...	...
		AT621		...	...	O|O	**83122**	**89406**
		AT766	O|O	**83209**	**89414**		...	...
		AT-620	O|O	**83209**	**89414**		...	...
		AT-621		...	...	O|O	**83122**	**89406**
		AT-766	O|O	**83209**	**89414**		...	...
CLASS A MOTORHOMES								
04-11	Models with Workhorse W20 , W22, & W24 MotorHome Chassis with O.E.M. Number	24-153256		...	...	–|–	**85124**	...
		24153256		...	...	–|–	**85124**	...
		F4BE5F325HO		...	...	–|–	**85124**	...
		F4-BE5-F325-HO		...	...	–|–	**85124**	...
		W0005663		...	...	–|–	**85124**	...
DISCOVERY								
02-06	Models with Freightliner XC Chassis with ZF - IFS Front Suspension and 23,000 lb GVW or Greater	16-18103-000	–|–	**85900**	...		...	...
		1618103000	–|–	**85900**	...		...	...
		481700000493	–|–	**85900**	...		...	...
02-06	MotorHomes with Freightliner XC Chassis and ADL200 Suspension w/ 20K Rear	16-16736-000		...	...	O|O	**85029**	...
		16-16873-000		...	...	O|O	**85029**	...
		1616736000		...	...	O|O	**85029**	...
		1616873000		...	...	O|O	**85029**	...
		141700131809		...	...	O|O	**85029**	...
02-06	MotorHomes with Freightliner XC Chassis and AS120 Front Suspension	16-16737-000	O|O	**83160**	...		...	...
		16-16874-000	O|O	**83160**	...		...	...
		1616737000	O|O	**83160**	...		...	...
		1616874000	O|O	**83160**	...		...	...
		141700131810	O|O	**83160**	...		...	...
EXCURSION								
02-06	MotorHomes with Freightliner XC Chassis and ADL200 Suspension w/ 20K Rear	16-16736-000		...	...	O|O	**85029**	...
		16-16873-000		...	...	O|O	**85029**	...
		1616736000		...	...	O|O	**85029**	...
		1616873000		...	...	O|O	**85029**	...
		141700131809		...	...	O|O	**85029**	...
02-06	MotorHomes with Freightliner XC Chassis and AS120 Front Suspension	16-16737-000	O|O	**83160**	...		...	...
		16-16874-000	O|O	**83160**	...		...	...
		1616737000	O|O	**83160**	...		...	...
		1616874000	O|O	**83160**	...		...	...
		141700131810	O|O	**83160**	...		...	...
03-06	Models with Freightliner XC Chassis with ZF - IFS Front Suspension and 23,000 lb GVW or Greater	16-18103-000	–|–	**85900**	...		...	...
		1618103000	–|–	**85900**	...		...	...
		481700000493	–|–	**85900**	...		...	...
EXPEDITION								
02-06	Models with Freightliner XC Chassis with ZF - IFS Front Suspension and 23,000 lb GVW or Greater	16-18103-000	–|–	**85900**	...		...	...

Year Ano Année	Model Modelo Modle	OEM #		Front			Rear	
				Fleetline	GasSLX		Fleetline	GasSLX
FLEETWOOD (CONT'D)								
EXPEDITION (cont'd)								
02-06	Models with Freightliner XC Chassis with ZF - IFS Front Suspension and 23,000 lb GVW or Greater	1618103000	−|−	**85900**	...		...	...
		481700000493	−|−	**85900**	...		...	...
02-06	MotorHomes with Freightliner XC Chassis and AS120 Front Suspension	16-16737-000	O|O	**83160**	...		...	...
		16-16874-000	O|O	**83160**	...		...	...
		1616737000	O|O	**83160**	...		...	...
		1616874000	O|O	**83160**	...		...	...
		141700131810	O|O	**83160**	...		...	...
FLAIR								
00-07	MotorHomes with Ford F53 Chassis with 16,000 lb GVW to 22,000 lb GVW	1C34-18045-AA	O|O	**83209**	**89414**		...	...
		1C34-18045-JA	O|O	**83209**	**89414**		...	...
		1C3418045AA	O|O	**83209**	**89414**		...	...
		1C3418045JA	O|O	**83209**	**89414**		...	...
		9U9Z18124A	O|O	**83209**	**89414**		...	...
		9U9Z18125A		...	...	O|O	**83122**	**89406**
		9U9Z-18124-A	O|O	**83209**	**89414**		...	...
		9U9Z-18125-A		...	...	O|O	**83122**	**89406**
		9U94-18045-AA	O|O	**83209**	**89414**		...	...
		9U94-18080-AA		...	...	O|O	**83122**	**89406**
		9U9418045AA	O|O	**83209**	**89414**		...	...
		9U9418080AA		...	...	O|O	**83122**	**89406**
		ASH137		...	...	O|O	**83122**	**89406**
		ASH294	O|O	**83209**	**89414**		...	...
		ASH1022	O|O	**83209**	**89414**		...	...
		ASH1023		...	...	O|O	**83122**	**89406**
		ASH1205	O|O	**83209**	**89414**		...	...
		ASH1206		...	...	O|O	**83122**	**89406**
		ASH1228	O|O	**83209**	**89414**		...	...
		ASH1229	O|O	**83209**	**89414**		...	...
		ASH1230		...	...	O|O	**83122**	**89406**
		ASH25822	O|O	**83209**	**89414**		...	...
		ASH25823	O|O	**83209**	**89414**		...	...
		ASH25824		...	...	O|O	**83122**	**89406**
		ASH-137		...	...	O|O	**83122**	**89406**
		ASH-294	O|O	**83209**	**89414**		...	...
		ASH-1022	O|O	**83209**	**89414**		...	...
		ASH-1023		...	...	O|O	**83122**	**89406**
		ASH-1205	O|O	**83209**	**89414**		...	...
		ASH-1206		...	...	O|O	**83122**	**89406**
		ASH-1228	O|O	**83209**	**89414**		...	...
		ASH-1229	O|O	**83209**	**89414**		...	...
		ASH-1230		...	...	O|O	**83122**	**89406**
		ASH-25822	O|O	**83209**	**89414**		...	...
		ASH-25823	O|O	**83209**	**89414**		...	...
		ASH-25824		...	...	O|O	**83122**	**89406**
		AT620	O|O	**83209**	**89414**		...	...
		AT621		...	...	O|O	**83122**	**89406**
		AT766	O|O	**83209**	**89414**		...	...
		AT-620	O|O	**83209**	**89414**		...	...
		AT-621		...	...	O|O	**83122**	**89406**
		AT-766	O|O	**83209**	**89414**		...	...
15-22	MotorHomes with Ford F53 Chassis with 16,000 lb GVW to 22,000 lb GVW	1C34-18045-AA	O|O	**83209**	**89414**		...	...
		1C34-18045-JA	O|O	**83209**	**89414**		...	...

FLEETWOOD (CONT'D)

FLAIR (cont'd)

Year Ano Année	Model Modelo Modle	OEM #		Front			Rear	
				Fleetline	GasSLX		Fleetline	GasSLX
15-22	MotorHomes with Ford F53 Chassis with 16,000 lb GVW to 22,000 lb GVW	1C3418045AA	O|O	**83209**	**89414**		...	...
		1C3418045JA	O|O	**83209**	**89414**		...	...
		9U9Z18124A	O|O	**83209**	**89414**		...	...
		9U9Z18125A		...	...	O|O	**83122**	**89406**
		9U9Z-18124-A	O|O	**83209**	**89414**		...	...
		9U9Z-18125-A		...	...	O|O	**83122**	**89406**
		9U94-18045-AA	O|O	**83209**	**89414**		...	...
		9U94-18080-AA		...	...	O|O	**83122**	**89406**
		9U9418045AA	O|O	**83209**	**89414**		...	...
		9U9418080AA		...	...	O|O	**83122**	**89406**
		ASH137		...	...	O|O	**83122**	**89406**
		ASH294	O|O	**83209**	**89414**		...	...
		ASH1022	O|O	**83209**	**89414**		...	...
		ASH1023		...	...	O|O	**83122**	**89406**
		ASH1205	O|O	**83209**	**89414**		...	...
		ASH1206		...	...	O|O	**83122**	**89406**
		ASH1228	O|O	**83209**	**89414**		...	...
		ASH1229	O|O	**83209**	**89414**		...	...
		ASH1230		...	...	O|O	**83122**	**89406**
		ASH25822	O|O	**83209**	**89414**		...	...
		ASH25823	O|O	**83209**	**89414**		...	...
		ASH25824		...	...	O|O	**83122**	**89406**
		ASH-137		...	...	O|O	**83122**	**89406**
		ASH-294	O|O	**83209**	**89414**		...	...
		ASH-1022	O|O	**83209**	**89414**		...	...
		ASH-1023		...	...	O|O	**83122**	**89406**
		ASH-1205	O|O	**83209**	**89414**		...	...
		ASH-1206		...	...	O|O	**83122**	**89406**
		ASH-1228	O|O	**83209**	**89414**		...	...
		ASH-1229	O|O	**83209**	**89414**		...	...
		ASH-1230		...	...	O|O	**83122**	**89406**
		ASH-25822	O|O	**83209**	**89414**		...	...
		ASH-25823	O|O	**83209**	**89414**		...	...
		ASH-25824		...	...	O|O	**83122**	**89406**
		AT620	O|O	**83209**	**89414**		...	...
		AT621		...	...	O|O	**83122**	**89406**
		AT766	O|O	**83209**	**89414**		...	...
		AT-620	O|O	**83209**	**89414**		...	...
		AT-621		...	...	O|O	**83122**	**89406**
		AT-766	O|O	**83209**	**89414**		...	...

JAMBOREE

99-20	MotorHomes with Ford E350 or E450 Chassis	8C2Z18124D	–|O	**G63622**	...		...	...
		8C2Z18125D		...	...	–|O	**G63623**	...
		8C2Z-18124-D	–|O	**G63622**	...		...	...
		8C2Z-18125-D		...	...	–|O	**G63623**	...
		8C24-18045-DA	–|O	**G63622**	...		...	...
		8C24-18080-DB		...	...	–|O	**G63623**	...
		8C2418045DA	–|O	**G63622**	...		...	...
		8C2418080DB		...	...	–|O	**G63623**	...
		ASH1136		...	...	–|O	**G63623**	...
		ASH1154	–|O	**G63622**	...		...	...
		ASH-1136		...	...	–|O	**G63623**	...
		ASH-1154	–|O	**G63622**	...		...	...

APPLICATION GUIDE - TRUCKS, TRAILERS AND BUSES

Year Ano Année	Model Modelo Modle	OEM #		Front			Rear	
				Fleetline	GasSLX		Fleetline	GasSLX
FLEETWOOD (CONT'D)								
JAMBOREE (cont'd)								
99-20	MotorHomes with Ford E350 or E450 Chassis	AT163G	−|○	**G63622**	...		...	...
		AT164G		...	...	−|○	**G63623**	...
		AT-163G	−|○	**G63622**	...		...	...
		AT-164G		...	...	−|○	**G63623**	...
PROVIDENCE								
04-06	Models with Freightliner XC Chassis with ZF - IFS Front Suspension and 23,000 lb GVW or Greater	16-18103-000	−|−	**85900**	...		...	...
		1618103000	−|−	**85900**	...		...	...
		481700000493	−|−	**85900**	...		...	...
04-06	MotorHomes with Freightliner XC Chassis and ADL200 Suspension w/ 20K Rear	16-16736-000		...	...	○|○	**85029**	...
		16-16873-000		...	...	○|○	**85029**	...
		1616736000		...	...	○|○	**85029**	...
		1616873000		...	...	○|○	**85029**	...
		141700131809		...	...	○|○	**85029**	...
04-06	MotorHomes with Freightliner XC Chassis and AS120 Front Suspension	16-16737-000	○|○	**83160**	...		...	...
		16-16874-000	○|○	**83160**	...		...	...
		1616737000	○|○	**83160**	...		...	...
		1616874000	○|○	**83160**	...		...	...
		141700131810	○|○	**83160**	...		...	...
SOUTHWIND								
00-04	MotorHomes with Ford F53 Chassis with 16,000 lb GVW to 22,000 lb GVW	9U9Z18125A		...	...	○|○	**83122**	**89406**
		9U9Z-18125-A		...	...	○|○	**83122**	**89406**
		9U94-18080-AA		...	...	○|○	**83122**	**89406**
		9U9418080AA		...	...	○|○	**83122**	**89406**
		ASH137		...	...	○|○	**83122**	**89406**
		ASH1023		...	...	○|○	**83122**	**89406**
		ASH1206		...	...	○|○	**83122**	**89406**
		ASH1230		...	...	○|○	**83122**	**89406**
		ASH25824		...	...	○|○	**83122**	**89406**
		ASH-137		...	...	○|○	**83122**	**89406**
		ASH-1023		...	...	○|○	**83122**	**89406**
		ASH-1206		...	...	○|○	**83122**	**89406**
		ASH-1230		...	...	○|○	**83122**	**89406**
		ASH-25824		...	...	○|○	**83122**	**89406**
		AT621		...	...	○|○	**83122**	**89406**
		AT-621		...	...	○|○	**83122**	**89406**
00-22	MotorHomes with Ford F53 Chassis with 16,000 lb GVW to 22,000 lb GVW	1C34-18045-AA	○|○	**83209**	**89414**		...	...
		1C34-18045-JA	○|○	**83209**	**89414**		...	...
		1C3418045AA	○|○	**83209**	**89414**		...	...
		1C3418045JA	○|○	**83209**	**89414**		...	...
		9U9Z18124A	○|○	**83209**	**89414**		...	...
		9U9Z-18124-A	○|○	**83209**	**89414**		...	...
		9U94-18045-AA	○|○	**83209**	**89414**		...	...
		9U9418045AA	○|○	**83209**	**89414**		...	...
		ASH294	○|○	**83209**	**89414**		...	...
		ASH1022	○|○	**83209**	**89414**		...	...
		ASH1205	○|○	**83209**	**89414**		...	...
		ASH1228	○|○	**83209**	**89414**		...	...
		ASH1229	○|○	**83209**	**89414**		...	...
		ASH25822	○|○	**83209**	**89414**		...	...
		ASH25823	○|○	**83209**	**89414**		...	...
		ASH-294	○|○	**83209**	**89414**		...	...

FLEETWOOD (CONT'D)

SOUTHWIND (cont'd)

Year Ano Année	Model Modelo Modle	OEM #		Front Fleetline	Front GasSLX		Rear Fleetline	Rear GasSLX
00-22	MotorHomes with Ford F53 Chassis with 16,000 lb GVW to 22,000 lb GVW	ASH-1022	O|O	83209	89414		...	...
		ASH-1205	O|O	83209	89414		...	...
		ASH-1228	O|O	83209	89414		...	...
		ASH-1229	O|O	83209	89414		...	...
		ASH-25822	O|O	83209	89414		...	...
		ASH-25823	O|O	83209	89414		...	...
		AT620	O|O	83209	89414		...	...
		AT766	O|O	83209	89414		...	...
		AT-620	O|O	83209	89414		...	...
		AT-766	O|O	83209	89414		...	...
06-22	MotorHomes with Ford F53 Chassis with 16,000 lb GVW to 22,000 lb GVW	9U9Z18125A		...	...	O|O	83122	89406
		9U9Z-18125-A		...	...	O|O	83122	89406
		9U94-18080-AA		...	...	O|O	83122	89406
		9U9418080AA		...	...	O|O	83122	89406
		ASH137		...	...	O|O	83122	89406
		ASH1023		...	...	O|O	83122	89406
		ASH1206		...	...	O|O	83122	89406
		ASH1230		...	...	O|O	83122	89406
		ASH25824		...	...	O|O	83122	89406
		ASH-137		...	...	O|O	83122	89406
		ASH-1023		...	...	O|O	83122	89406
		ASH-1206		...	...	O|O	83122	89406
		ASH-1230		...	...	O|O	83122	89406
		ASH-25824		...	...	O|O	83122	89406
		AT621		...	...	O|O	83122	89406
		AT-621		...	...	O|O	83122	89406

STORM

Year Ano Année	Model Modelo Modle	OEM #		Front Fleetline	Front GasSLX		Rear Fleetline	Rear GasSLX
01-04	MotorHomes with Ford F53 Chassis with 16,000 lb GVW to 22,000 lb GVW	9U9Z18125A		...	...	O|O	83122	89406
		9U9Z-18125-A		...	...	O|O	83122	89406
		9U94-18080-AA		...	...	O|O	83122	89406
		9U9418080AA		...	...	O|O	83122	89406
		ASH137		...	...	O|O	83122	89406
		ASH1023		...	...	O|O	83122	89406
		ASH1206		...	...	O|O	83122	89406
		ASH1230		...	...	O|O	83122	89406
		ASH25824		...	...	O|O	83122	89406
		ASH-137		...	...	O|O	83122	89406
		ASH-1023		...	...	O|O	83122	89406
		ASH-1206		...	...	O|O	83122	89406
		ASH-1230		...	...	O|O	83122	89406
		ASH-25824		...	...	O|O	83122	89406
		AT621		...	...	O|O	83122	89406
		AT-621		...	...	O|O	83122	89406
01-07	MotorHomes with Ford F53 Chassis with 16,000 lb GVW to 22,000 lb GVW	1C34-18045-AA	O|O	83209	89414		...	...
		1C34-18045-JA	O|O	83209	89414		...	...
		1C3418045AA	O|O	83209	89414		...	...
		1C3418045JA	O|O	83209	89414		...	...
		9U9Z18124A	O|O	83209	89414		...	...
		9U9Z-18124-A	O|O	83209	89414		...	...
		9U94-18045-AA	O|O	83209	89414		...	...
		9U9418045AA	O|O	83209	89414		...	...
		ASH294	O|O	83209	89414		...	...
		ASH1022	O|O	83209	89414		...	...

Year Ano Année	Model Modelo Modle	OEM #		Front			Rear	
				Fleetline	GasSLX		Fleetline	GasSLX
FLEETWOOD (CONT'D)								
STORM (cont'd)								
01-07	MotorHomes with Ford F53 Chassis with 16,000 lb GVW to 22,000 lb GVW	ASH1205	O|O	83209	89414		...	...
		ASH1228	O|O	83209	89414		...	...
		ASH1229	O|O	83209	89414		...	...
		ASH25822	O|O	83209	89414		...	...
		ASH25823	O|O	83209	89414		...	...
		ASH-294	O|O	83209	89414		...	...
		ASH-1022	O|O	83209	89414		...	...
		ASH-1205	O|O	83209	89414		...	...
		ASH-1228	O|O	83209	89414		...	...
		ASH-1229	O|O	83209	89414		...	...
		ASH-25822	O|O	83209	89414		...	...
		ASH-25823	O|O	83209	89414		...	...
		AT620	O|O	83209	89414		...	...
		AT766	O|O	83209	89414		...	...
		AT-620	O|O	83209	89414		...	...
		AT-766	O|O	83209	89414		...	...
06-07	MotorHomes with Ford F53 Chassis with 16,000 lb GVW to 22,000 lb GVW	9U9Z18125A		...	...	O|O	83122	89406
		9U9Z-18125-A		...	...	O|O	83122	89406
		9U94-18080-AA		...	...	O|O	83122	89406
		9U9418080AA		...	...	O|O	83122	89406
		ASH137		...	...	O|O	83122	89406
		ASH1023		...	...	O|O	83122	89406
		ASH1206		...	...	O|O	83122	89406
		ASH1230		...	...	O|O	83122	89406
		ASH25824		...	...	O|O	83122	89406
		ASH-137		...	...	O|O	83122	89406
		ASH-1023		...	...	O|O	83122	89406
		ASH-1206		...	...	O|O	83122	89406
		ASH-1230		...	...	O|O	83122	89406
		ASH-25824		...	...	O|O	83122	89406
		AT621		...	...	O|O	83122	89406
		AT-621		...	...	O|O	83122	89406
11-18	MotorHomes with Ford F53 Chassis with 16,000 lb GVW to 22,000 lb GVW	1C34-18045-AA	O|O	83209	89414		...	...
		1C34-18045-JA	O|O	83209	89414		...	...
		1C3418045AA	O|O	83209	89414		...	...
		1C3418045JA	O|O	83209	89414		...	...
		9U9Z18124A	O|O	83209	89414		...	...
		9U9Z18125A		...	...	O|O	83122	89406
		9U9Z-18124-A	O|O	83209	89414		...	...
		9U9Z-18125-A		...	...	O|O	83122	89406
		9U94-18045-AA	O|O	83209	89414		...	...
		9U94-18080-AA		...	...	O|O	83122	89406
		9U9418045AA	O|O	83209	89414		...	...
		9U9418080AA		...	...	O|O	83122	89406
		ASH137		...	...	O|O	83122	89406
		ASH294	O|O	83209	89414		...	...
		ASH1022	O|O	83209	89414		...	...
		ASH1023		...	...	O|O	83122	89406
		ASH1205	O|O	83209	89414		...	...
		ASH1206		...	...	O|O	83122	89406
		ASH1228	O|O	83209	89414		...	...
		ASH1229	O|O	83209	89414		...	...
		ASH1230		...	...	O|O	83122	89406
		ASH25822	O|O	83209	89414		...	...

FLEETWOOD (CONT'D)

STORM (cont'd)

Year / Ano / Année	Model / Modelo / Modle	OEM #	Front: Fleetline	Front: GasSLX	Rear: Fleetline	Rear: GasSLX
11-18	MotorHomes with Ford F53 Chassis with 16,000 lb GVW to 22,000 lb GVW	ASH25823	83209	89414	...	...
		ASH25824	...	...	83122	89406
		ASH-137	...	...	83122	89406
		ASH-294	83209	89414	...	...
		ASH-1022	83209	89414	...	...
		ASH-1023	...	...	83122	89406
		ASH-1205	83209	89414	...	...
		ASH-1206	...	...	83122	89406
		ASH-1228	83209	89414	...	...
		ASH-1229	83209	89414	...	...
		ASH-1230	...	...	83122	89406
		ASH-25822	83209	89414	...	...
		ASH-25823	83209	89414	...	...
		ASH-25824	...	...	83122	89406
		AT620	83209	89414	...	...
		AT621	...	...	83122	89406
		AT766	83209	89414	...	...
		AT-620	83209	89414	...	...
		AT-621	...	...	83122	89406
		AT-766	83209	89414	...	...

SURGE

Year / Ano / Année	Model / Modelo / Modle	OEM #	Front: Fleetline	Front: GasSLX	Rear: Fleetline	Rear: GasSLX
18-20	MotorHomes with Ford E350 or E450 Chassis	8C2Z18124D	G63622	...	...	...
		8C2Z18125D	...	...	G63623	...
		8C2Z-18124-D	G63622	...	...	...
		8C2Z-18125-D	...	...	G63623	...
		8C24-18045-DA	G63622	...	...	...
		8C24-18080-DB	...	...	G63623	...
		8C2418045DA	G63622	...	...	...
		8C2418080DB	...	...	G63623	...
		ASH1136	...	...	G63623	...
		ASH1154	G63622	...	...	...
		ASH-1136	...	...	G63623	...
		ASH-1154	G63622	...	...	...
		AT163G	G63622	...	...	...
		AT164G	...	...	G63623	...
		AT-163G	G63622	...	...	...
		AT-164G	...	...	G63623	...

TIOGA

Year / Ano / Année	Model / Modelo / Modle	OEM #	Front: Fleetline	Front: GasSLX	Rear: Fleetline	Rear: GasSLX
99-16	MotorHomes with Ford E350 or E450 Chassis	8C2Z18124D	G63622	...	...	...
		8C2Z18125D	...	...	G63623	...
		8C2Z-18124-D	G63622	...	...	...
		8C2Z-18125-D	...	...	G63623	...
		8C24-18045-DA	G63622	...	...	...
		8C24-18080-DB	...	...	G63623	...
		8C2418045DA	G63622	...	...	...
		8C2418080DB	...	...	G63623	...
		ASH1136	...	...	G63623	...
		ASH1154	G63622	...	...	...
		ASH-1136	...	...	G63623	...
		ASH-1154	G63622	...	...	...
		AT163G	G63622	...	...	...
		AT164G	...	...	G63623	...

Year Ano Année	Model Modelo Modle	OEM #		Front			Rear	
				Fleetline	GasSLX		Fleetline	GasSLX
FLEETWOOD (CONT'D)								
TIOGA (cont'd)								
99-16	MotorHomes with Ford E350 or E450 Chassis	AT-163G	−|O	**G63622**	...		...	...
		AT-164G		...	...	−|O	**G63623**	...
FLUIDRIVE								
	Models T950-1200, -1400, -1700	2697		...	...	O|O	**85712**	...
FLXIBLE BUS								
	2-Level Intercity Bus	.....	O|O	**85736**	...		...	...
	Additional O.E.M. Interchanges	6-05-10	O|O	**85734**				
		6-367-1	−|O	**85711**				
		6-367-2	O|O	**85736**				
		6-367-3	O|O	**85304**				
		6-367-6	−|O	**85711**				
		6-367-7	O|O	**85305**				
		6-367-9	−|O	**85711**				
		6-367-11	−|O	**85711**				
		6-367-17	O|O	**85700**				
		06-0367-00151	O|O	**85700**				
		06-0367-00156	O|O	**85702**				
		48-1-239	O|O	**85736**				
		48-1-241	O|O	**85712**				
		97-2210-00156	O|O	**85702**				
		97-2210-00157	−|−	**85708**				
		97-2210-00160	−|−	**85705 or 89447**				
		97-2210-00164	−|−	**85708**				
		97-9999-00807	O|O	**85307**				
		97-9999-02514	O|O	**85700**				
		97-9999-02515	O|O	**85702**				
		97-9999-02632	−|O	**85711**				
		97-9999-02633		...	...	−|O	**85311**	**89424**
		97-9999-02634		**85733**				
		97-9999-02635	O|O	**85732**				
		97-9999-02636	O|O	**85716**				
		015813		...	...	−|−	**85708**	...
		60510	O|O	**85734**				
		63671	−|O	**85711**				
		63672	O|O	**85736**				
		63673	O|O	**85304**				
		63676	−|O	**85711**				
		63677	O|O	**85305**				
		63679	−|O	**85711**				
		481239	O|O	**85736**				
		481241	O|O	**85712**				
		636711	−|O	**85711**				
		636717	O|O	**85700**				
		680029	O|O	**85301**				
		680155	O|O	**85712**				
		06036700151	O|O	**85700**				
		06036700156	O|O	**85702**				
		97221000156	O|O	**85702**				
		97221000157	−|−	**85708**				
		97221000160	−|−	**85705 or 89447**				
		97221000164	−|−	**85708**				
		97999900807	O|O	**85307**				

APPLICATION GUIDE - TRUCKS, TRAILERS AND BUSES

Year Ano Année	Model Modelo Modle	OEM #		Front			Rear	
				Fleetline	GasSLX		Fleetline	GasSLX
FLXIBLE BUS (CONT'D)								
	Additional O.E.M. Interchanges	97999902514	O|O	**85700**				
		97999902515	O|O	**85702**				
		97999902632	–|O	**85711**				
		97999902633		...	...	–|O	**85311**	89424
		97999902634		**85733**				
		97999902635	O|O	**85732**				
		97999902636	O|O	**85716**				
	City Bus - 51 Passenger	6-05-1	O|O	**85736**	...		...	...
		6-05-2	O|O	**85736**	...		...	...
		6-05-3	O|O	**85736**	...		...	...
		6-05-4	O|O	**85736**	...		...	...
		6-05-5	O|O	**85307**	...		...	...
		6-05-6	O|O	**85736**	...		...	...
		6-05-7	O|O	**85736**	...		...	...
		6-05-8	O|O	**85736**	...		...	...
		6051	O|O	**85736**	...		...	...
		6052	O|O	**85736**	...		...	...
		6053	O|O	**85736**	...		...	...
		6054	O|O	**85736**	...		...	...
		6055	O|O	**85307**	...		...	...
		6056	O|O	**85736**	...		...	...
		6057	O|O	**85736**	...		...	...
		6058	O|O	**85736**	...		...	...
	City Bus - 51 Passenger with Rubber Torsion Suspension	6-05-1	O|O	**85736**	...		...	...
		6-05-2		...	...	O|O	**85736**	...
		6-05-3		...	...	O|O	**85736**	...
		6-05-4		...	...	O|O	**85736**	...
		6-05-5		...	...	O|O	**85307**	...
		6-05-6		...	...	O|O	**85736**	...
		6-05-7		...	...	O|O	**85736**	...
		6-05-8		...	...	O|O	**85736**	...
		6051	O|O	**85736**	...		...	...
		6052		...	...	O|O	**85736**	...
		6053		...	...	O|O	**85736**	...
		6054		...	...	O|O	**85736**	...
		6055		...	...	O|O	**85307**	...
		6056		...	...	O|O	**85736**	...
		6057		...	...	O|O	**85736**	...
		6058		...	...	O|O	**85736**	...
	Model 870 Flex Bus, Metro	87-2520-00001		...	...	O|O	**85704**	...
		87-2520-00003		...	...	O|O	**85704**	...
		97-2210-00001		...	...	O|O	**85704**	...
		97-2210-00002		...	...	O|O	**85704**	...
		97-2210-00003		...	...	O|O	**85704**	...
		97-2210-00004		...	...	O|O	**85704**	...
		97-2210-00005		...	...	O|O	**85704**	...
		97-2210-00006		...	...	O|O	**85704**	...
		97-2210-00009		...	...	O|O	**85704**	...
		97-2210-00011		...	...	O|O	**85704**	...
		74412		...	...	O|O	**85704**	...
		4975518		...	...	O|O	**85704**	...
		87252000001		...	...	O|O	**85704**	...
		87252000003		...	...	O|O	**85704**	...
		97221000001		...	...	O|O	**85704**	...
		97221000002		...	...	O|O	**85704**	...

APPLICATION GUIDE - TRUCKS, TRAILERS AND BUSES

Year Ano Année	Model Modelo Modle	OEM #		Front			Rear	
				Fleetline	GasSLX		Fleetline	GasSLX
FLXIBLE BUS (CONT'D)								
	Model 870 Flex Bus, Metro	97221000003		...	...	O|O	**85704**	...
		97221000004		...	...	O|O	**85704**	...
		97221000005		...	...	O|O	**85704**	...
		97221000006		...	...	O|O	**85704**	...
		97221000009		...	...	O|O	**85704**	...
		97221000011		...	...	O|O	**85704**	...
	Models with O.E.M. Number	6-05-9	O|O	**85304**	...		...	...
		6-05-13		...	...	O|O	**85304**	...
		6-367-8	O|O	**85700**	...		...	...
		6-367-12	O|O	**85700**	...		...	...
		6-367-14	O|O	**85700**	...		...	...
		6-367-16	O|O	**85700**	...		...	...
		97-2201-00151	O|O	**85700**	...		...	...
		97-2210-00170		**85733**	...		...	...
		6059	O|O	**85304**	...		...	...
		60513		...	...	O|O	**85304**	...
		63678	O|O	**85700**	...		...	...
		636712	O|O	**85700**	...		...	...
		636714	O|O	**85700**	...		...	...
		636716	O|O	**85700**	...		...	...
		695125		...	...	O|O	**85704**	...
		3166657	O|O	**85700**	...		...	...
		3192333	O|O	**85700**	...		...	...
		22012067	O|O	**85700**	...		...	...
		22012114	O|O	**85700**	...		...	...
		22024061		...	...	O|O	**85704**	...
		22025067		...	...	O|O	**85704**	...
		22025305		...	...	O|O	**85704**	...
		97220100151	O|O	**85700**	...		...	...
		97221000170		**85733**	...		...	...
FLYER INDUSTRIES								
91-21	Coaches with Low Floor	009863	–|–	**85722**	...		...	...
	Additional O.E.M. Interchanges	592-6568	O|O	**85700**				
		015915	–|O	**85711**				
		3166657	O|O	**85700**				
		3192333	O|O	**85700**				
		4975501	O|O	**85700**				
		4975552	–|O	**85711**	...		...	...
		5926568	O|O	**85700**				
		5979574	O|O	**85700**				
		22012067	O|O	**85700**	...		...	...
		22012114	O|O	**85700**	...		...	...
	Coaches with Low Floor	15813		...	...	–|–	**85708**	...
FORD								
8500 SERIES								
	Models with 101", 113" & 122" BBC Conventional Tractors with Link Cabmate Models FH101, FH1322 & FH1322-A	1201-1043	O|O	**83025**				
		1202-1043	O|O	**83025**				
		12011043	O|O	**83025**				
		12021043	O|O	**83025**				
9500 SERIES								
	Models with 101", 113" & 122" BBC Conventional Tractors with Link Cabmate Models FH101, FH1322 & FH1322-A	1201-1043	O|O	**83025**				

APPLICATION GUIDE - TRUCKS, TRAILERS AND BUSES

Year Ano Année	Model Modelo Modle	OEM #		Front			Rear	
				Fleetline	GasSLX		Fleetline	GasSLX

FORD (CONT'D)

9500 SERIES (cont'd)

	Models with 101", 113" & 122" BBC Conventional Tractors with Link Cabmate Models FH101, FH1322 & FH1322-A	1202-1043	○|○	83025				
		12011043	○|○	83025				
		12021043	○|○	83025				
	Models with O.E.M. Number	F6HZ5K407AB	○|○	83034				
		F6HZ-5K407-AB	○|○	83034				

A9513

96-98	All Models with 10000 lb or 12000 lb Axle and 54" Taperleaf Spring	F6HT18045AC	○|○	85054	...		...	...
		F6HT-18045-AC	○|○	85054	...		...	...
		F6HZ18124A	○|○	85054	...		...	...
		F6HZ18124G	○|○	85054	...		...	...
		F6HZ-18124-A	○|○	85054	...		...	...
		F6HZ-18124-G	○|○	85054	...		...	...
96-98	All with 12000 lb, 13000 lb or 14600 lb Axle and 60" Taperleaf Spring	F6HT18045EB	○|○	85055	89439		...	...
		F6HT18045EC	○|○	85055	89439		...	...
		F6HT-18045-EB	○|○	85055	89439		...	...
		F6HT-18045-EC	○|○	85055	89439		...	...
		F6HZ18124D	○|○	85055	89439		...	...
		F6HZ18124E	○|○	85055	89439		...	...
		F6HZ18124F	○|○	85055	89439		...	...
		F6HZ-18124-D	○|○	85055	89439		...	...
		F6HZ-18124-E	○|○	85055	89439		...	...
		F6HZ-18124-F	○|○	85055	89439		...	...
96-98	All with 13200 lb or 14600 lb Axle and 54" Taperleaf Spring	F6HT18045GB	○|○	85030	89440		...	...
		F6HT18045GC	○|○	85030	89440		...	...
		F6HT-18045-GB	○|○	85030	89440		...	...
		F6HT-18045-GC	○|○	85030	89440		...	...
96-98	All with 23000 lb Axle and 52" Taperleaf spring	F5HZ18125A		...	...	○|○	85314	89425
		F5HZ-18125-A		...	...	○|○	85314	89425
96-98	All with Hendrickson HAS-400, HA-210 or HA-230 Air Suspension	47902-28		...	...	○|○	85013	89414
		4790228		...	...	○|○	85013	89414
		F6HZ18080FC		...	...	○|○	85013	89414
		F6HZ18125D		...	...	○|○	85013	89414
		F6HZ-18080-FC		...	...	○|○	85013	89414
		F6HZ-18125-D		...	...	○|○	85013	89414
96-98	All with Neway AD-246 Air Suspension	90045099		...	...	○|○	85906	89407
		90045132		...	...	○|○	85906	89407
		90045132		...	...	○|○	85909	...
96-98	Models with 8500 or 9000 lb Axle and 54" Taperleaf Spring	F6HT18045HC	○|○	85054	...		...	...
		F6HT-18045-HC	○|○	85054	...		...	...
96-98	Models with 10000 lb Axle and 54" Multileaf Spring	F6HT18045KA	○|○	89402	...		...	...
		F6HT-18045-KA	○|○	89402	...		...	...
96-98	Models with 12000 or 13200 lb Axle and 54" Multileaf Spring	F6HT18045BC	○|○	85047	89435		...	...
		F6HT-18045-BC	○|○	85047	89435		...	...
96-98	Models with 21000 lb or 23000 lb Axle and 46" Taperleaf spring	F5HZ18125B		...	...	○|○	85001	89410
		F5HZ-18125-B		...	...	○|○	85001	89410
96-98	Models with Hendrickson 40LH Model Tandem Axle	57241-2		...	...		83109	...
		572412		...	...		83109	...
		F6HT18080B		...	...		83109	...
		F6HT18080DA		...	...		83109	...
		F6HT-18080-B		...	...		83109	...
		F6HT-18080-DA		...	...		83109	...
		F6HZ18125B		...	...		83109	...

APPLICATION GUIDE - TRUCKS, TRAILERS AND BUSES

Year Ano Année	Model Modelo Modle	OEM #		Front			Rear	
				Fleetline	GasSLX		Fleetline	GasSLX
FORD (CONT'D)								
A9513 (cont'd)								
96-98	Models with Hendrickson 40LH Model Tandem Axle	F6HZ-18125-B		...	...		83109	...
A9522								
1997	All Models with 10000 lb or 12000 lb Axle and 54" Taperleaf Spring	F6HT18045AC	○|○	85054	...		...	...
		F6HT-18045-AC	○|○	85054	...		...	...
		F6HZ18124A	○|○	85054	...		...	...
		F6HZ18124G	○|○	85054	...		...	...
		F6HZ-18124-A	○|○	85054	...		...	...
		F6HZ-18124-G	○|○	85054	...		...	...
1997	All with 12000 lb, 13000 lb or 14600 lb Axle and 60" Taperleaf Spring	F6HT18045EB	○|○	85055	89439		...	...
		F6HT18045EC	○|○	85055	89439		...	...
		F6HT-18045-EB	○|○	85055	89439		...	...
		F6HT-18045-EC	○|○	85055	89439		...	...
		F6HZ18124D	○|○	85055	89439		...	...
		F6HZ18124E	○|○	85055	89439		...	...
		F6HZ18124F	○|○	85055	89439		...	...
		F6HZ-18124-D	○|○	85055	89439		...	...
		F6HZ-18124-E	○|○	85055	89439		...	...
		F6HZ-18124-F	○|○	85055	89439		...	...
1997	All with 13200 lb or 14600 lb Axle and 54" Taperleaf Spring	F6HT18045GB	○|○	85030	89440		...	...
		F6HT18045GC	○|○	85030	89440		...	...
		F6HT-18045-GB	○|○	85030	89440		...	...
		F6HT-18045-GC	○|○	85030	89440		...	...
1997	All with 23000 lb Axle and 52" Taperleaf spring	F5HZ18125A		...	...	○|○	85314	89425
		F5HZ-18125-A		...	...	○|○	85314	89425
1997	All with Hendrickson HAS-400, HA-210 or HA-230 Air Suspension	47902-28		...	...	○|○	85013	89414
		4790228		...	...	○|○	85013	89414
		F6HZ18080FC		...	...	○|○	85013	89414
		F6HZ18125D		...	...	○|○	85013	89414
		F6HZ-18080-FC		...	...	○|○	85013	89414
		F6HZ-18125-D		...	...	○|○	85013	89414
1997	All with Neway AD-246 Air Suspension	90045099		...	...	○|○	85906	89407
		90045132		...	...	○|○	85906	89407
		90045132		...	...	○|○	85909	...
1997	Models with 8500 or 9000 lb Axle and 54" Taperleaf Spring	F6HT18045HC	○|○	85054	...		...	...
		F6HT-18045-HC	○|○	85054	...		...	...
1997	Models with 12000 or 13200 lb Axle and 54" Multileaf Spring	F6HT18045BC	○|○	85047	89435		...	...
		F6HT-18045-BC	○|○	85047	89435		...	...
1997	Models with 21000 lb or 23000 lb Axle and 46" Taperleaf spring	F5HZ18125B		...	...	○|○	85001	89410
		F5HZ-18125-B		...	...	○|○	85001	89410
1997	Models with Hendrickson 40LH Model Tandem Axle	57241-2		...	...		83109	...
		572412		...	...		83109	...
		F6HT18080B		...	...		83109	...
		F6HT18080DA		...	...		83109	...
		F6HT-18080-B		...	...		83109	...
		F6HT-18080-DA		...	...		83109	...
		F6HZ18125B		...	...		83109	...
		F6HZ-18125-B		...	...		83109	...
ADDITIONAL APPLICATIONS								
	CL9000 & CLT9000 Cabover Tractors (Sleeper & Non-Sleeper) with Link Cabmate Model FCL110-2P	1202-0032	○|○	83016				

APPLICATION GUIDE - TRUCKS, TRAILERS AND BUSES

Year Ano Année	Model Modelo Modle	OEM #		Front			Rear	
				Fleetline	GasSLX		Fleetline	GasSLX

FORD (CONT'D)

ADDITIONAL APPLICATIONS (cont'd)

	CL9000 & CLT9000 Cabover Tractors (Sleeper & Non-Sleeper) with Link Cabmate Model FCL110-2P	12020032	O|O	**83016**				
	Models with Link Cab Suspension	1202-0042	O|O	**83025**				
		12020042	O|O	**83025**				

AEROMAX (A, AT, AAT, 8500, 9500) SERIES

1996	8000 Models with 12000 or 13000 lb Axles	F6HT18045LA	O|O	**85376**	...		...	...
		F6HT-18045-LA	O|O	**85376**	...		...	...
1996	8000 Models with 16000 lb. Multileaf Spring	F6HT18045AA	O|O	**85054**	...		...	...
		F6HT-18045-AA	O|O	**85054**	...		...	...

AT9513

96-98	All Models with 10000 lb or 12000 lb Axle and 54" Taperleaf Spring	F6HT18045AC	O|O	**85054**	...		...	...
		F6HT-18045-AC	O|O	**85054**	...		...	...
		F6HZ18124A	O|O	**85054**	...		...	...
		F6HZ18124G	O|O	**85054**	...		...	...
		F6HZ-18124-A	O|O	**85054**	...		...	...
		F6HZ-18124-G	O|O	**85054**	...		...	...
96-98	All with 12000 lb, 13000 lb or 14600 lb Axle and 60" Taperleaf Spring	F6HT18045EB	O|O	**85055**	**89439**		...	...
		F6HT18045EC	O|O	**85055**	**89439**		...	...
		F6HT-18045-EB	O|O	**85055**	**89439**		...	...
		F6HT-18045-EC	O|O	**85055**	**89439**		...	...
		F6HZ18124D	O|O	**85055**	**89439**		...	...
		F6HZ18124E	O|O	**85055**	**89439**		...	...
		F6HZ18124F	O|O	**85055**	**89439**		...	...
		F6HZ-18124-D	O|O	**85055**	**89439**		...	...
		F6HZ-18124-E	O|O	**85055**	**89439**		...	...
		F6HZ-18124-F	O|O	**85055**	**89439**		...	...
96-98	All with 13200 lb or 14600 lb Axle and 54" Taperleaf Spring	F6HT18045GB	O|O	**85030**	**89440**		...	...
		F6HT18045GC	O|O	**85030**	**89440**		...	...
		F6HT-18045-GB	O|O	**85030**	**89440**		...	...
		F6HT-18045-GC	O|O	**85030**	**89440**		...	...
96-98	All with 23000 lb Axle and 52" Taperleaf spring	F5HZ18125A		...	...	O|O	**85314**	**89425**
		F5HZ-18125-A		...	...	O|O	**85314**	**89425**
96-98	All with Hendrickson HAS-400, HA-210 or HA-230 Air Suspension	47902-28		...	...	O|O	**85013**	**89414**
		4790228		...	...	O|O	**85013**	**89414**
		F6HZ18080FC		...	...	O|O	**85013**	**89414**
		F6HZ18125D		...	...	O|O	**85013**	**89414**
		F6HZ-18080-FC		...	...	O|O	**85013**	**89414**
		F6HZ-18125-D		...	...	O|O	**85013**	**89414**
96-98	All with Neway AD-246 Air Suspension	90045099		...	...	O|O	**85906**	**89407**
		90045132		...	...	O|O	**85906**	**89407**
		90045132		...	...	O|O	**85909**	...
96-98	Models with 8500 or 9000 lb Axle and 54" Taperleaf Spring	F6HT18045HC	O|O	**85054**	...		...	...
		F6HT-18045-HC	O|O	**85054**	...		...	...
96-98	Models with 10000 lb Axle and 54" Multileaf Spring	F6HT18045KA	O|O	**89402**	...		...	...
		F6HT-18045-KA	O|O	**89402**	...		...	...
96-98	Models with 12000 or 13200 lb Axle and 54" Multileaf Spring	F6HT18045BC	O|O	**85047**	**89435**		...	...
		F6HT-18045-BC	O|O	**85047**	**89435**		...	...
96-98	Models with 21000 lb or 23000 lb Axle and 46" Taperleaf spring	F5HZ18125B		...	...	O|O	**85001**	**89410**
		F5HZ-18125-B		...	...	O|O	**85001**	**89410**
96-98	Models with Hendrickson 40LH Model Tandem Axle	57241-2		...	...		**83109**	...
		572412		...	...		**83109**	...
		F6HT18080B		...	...		**83109**	...

APPLICATION GUIDE - TRUCKS, TRAILERS AND BUSES

Year Ano Année	Model Modelo Modle	OEM #		Front			Rear	
				Fleetline	GasSLX		Fleetline	GasSLX
FORD (CONT'D)								
AT9513 (cont'd)								
96-98	Models with Hendrickson 40LH Model Tandem Axle	F6HT18080DA		...	...		83109	...
		F6HT-18080-B		...	...		83109	...
		F6HT-18080-DA		...	...		83109	...
		F6HZ18125B		...	...		83109	...
		F6HZ-18125-B		...	...		83109	...
AT9522								
97-98	All Models with 10000 lb or 12000 lb Axle and 54" Taperleaf Spring	F6HT18045AC	○|○	85054	...		...	...
		F6HT-18045-AC	○|○	85054	...		...	...
		F6HZ18124A	○|○	85054	...		...	...
		F6HZ18124G	○|○	85054	...		...	...
		F6HZ-18124-A	○|○	85054	...		...	...
		F6HZ-18124-G	○|○	85054	...		...	...
97-98	All with 12000 lb, 13000 lb or 14600 lb Axle and 60" Taperleaf Spring	F6HT18045EB	○|○	85055	89439		...	...
		F6HT18045EC	○|○	85055	89439		...	...
		F6HT-18045-EB	○|○	85055	89439		...	...
		F6HT-18045-EC	○|○	85055	89439		...	...
		F6HZ18124D	○|○	85055	89439		...	...
		F6HZ18124E	○|○	85055	89439		...	...
		F6HZ18124F	○|○	85055	89439		...	...
		F6HZ-18124-D	○|○	85055	89439		...	...
		F6HZ-18124-E	○|○	85055	89439		...	...
		F6HZ-18124-F	○|○	85055	89439		...	...
97-98	All with 13200 lb or 14600 lb Axle and 54" Taperleaf Spring	F6HT18045GB	○|○	85030	89440		...	...
		F6HT18045GC	○|○	85030	89440		...	...
		F6HT-18045-GB	○|○	85030	89440		...	...
		F6HT-18045-GC	○|○	85030	89440		...	...
97-98	All with 23000 lb Axle and 52" Taperleaf spring	F5HZ18125A		...	...	○|○	85314	89425
		F5HZ-18125-A		...	...	○|○	85314	89425
97-98	All with Hendrickson HAS-400, HA-210 or HA-230 Air Suspension	47902-28		...	...	○|○	85013	89414
		4790228		...	...	○|○	85013	89414
		F6HZ18080FC		...	...	○|○	85013	89414
		F6HZ18125D		...	...	○|○	85013	89414
		F6HZ-18080-FC		...	...	○|○	85013	89414
		F6HZ-18125-D		...	...	○|○	85013	89414
97-98	All with Neway AD-246 Air Suspension	90045099		...	...	○|○	85906	89407
		90045132		...	...	○|○	85906	89407
		90045132		...	...	○|○	85909	...
97-98	Models with 8500 or 9000 lb Axle and 54" Taperleaf Spring	F6HT18045HC	○|○	85054	...		...	...
		F6HT-18045-HC	○|○	85054	...		...	...
97-98	Models with 10000 lb Axle and 54" Multileaf Spring	F6HT18045KA	○|○	89402	...		...	...
		F6HT-18045-KA	○|○	89402	...		...	...
97-98	Models with 12000 or 13200 lb Axle and 54" Multileaf Spring	F6HT18045BC	○|○	85047	89435		...	...
		F6HT-18045-BC	○|○	85047	89435		...	...
97-98	Models with 21000 lb or 23000 lb Axle and 46" Taperleaf spring	F5HZ18125B		...	...	○|○	85001	89410
		F5HZ-18125-B		...	...	○|○	85001	89410
97-98	Models with Hendrickson 40LH Model Tandem Axle	57241-2		...	...		83109	...
		572412		...	...		83109	...
		F6HT18080B		...	...		83109	...
		F6HT18080DA		...	...		83109	...
		F6HT-18080-B		...	...		83109	...
		F6HT-18080-DA		...	...		83109	...
		F6HZ18125B		...	...		83109	...
		F6HZ-18125-B		...	...		83109	...

APPLICATION GUIDE - TRUCKS, TRAILERS AND BUSES

Year Ano Année	Model Modelo Modle	OEM #		Front			Rear	
				Fleetline	GasSLX		Fleetline	GasSLX

FORD (CONT'D)

B600

80-94	B - Series - Bus Cowl Chassis	E0HT18045AA	O|O	**83309**	...		...	...
		E0HT18045AB	O|O	**83309**	...		...	...
		E0HT-18045-AA	O|O	**83309**	...		...	...
		E0HT-18045-AB	O|O	**83309**	...		...	...
		F1HT18045AA	O|O	**83309**	...		...	...
		F1HT-18045-AA	O|O	**83309**	...		...	...

B700

80-94	B - Series - Bus Cowl Chassis	E0HT18045AA	O|O	**83309**	...		...	...
		E0HT18045AB	O|O	**83309**	...		...	...
		E0HT-18045-AA	O|O	**83309**	...		...	...
		E0HT-18045-AB	O|O	**83309**	...		...	...
		F1HT18045AA	O|O	**83309**	...		...	...
		F1HT-18045-AA	O|O	**83309**	...		...	...
1994	Models with with 14600 lb Multileaf Spring	F4HT18045EA	O|O	**83125**	...		...	...
		F4HT-18045-EA	O|O	**83125**	...		...	...
1994	Models with with 15000, 17500, 19000 lb Taperleaf Springs	F4HT18080AA		...	...	O|O	**85314**	**89425**
		F4HT18080AB		...	...	O|O	**85314**	**89425**
		F4HT-18080-AA		...	...	O|O	**85314**	**89425**
		F4HT-18080-AB		...	...	O|O	**85314**	**89425**

B800

95-96	B - Series - Bus Cowl Chassis	E0HT18045AA	O|O	**83309**	...		...	...
		E0HT18045AB	O|O	**83309**	...		...	...
		E0HT-18045-AA	O|O	**83309**	...		...	...
		E0HT-18045-AB	O|O	**83309**	...		...	...
		F1HT18045AA	O|O	**83309**	...		...	...
		F1HT-18045-AA	O|O	**83309**	...		...	...
95-97	Models with 52" Multileaf Spring	F4HT18045CB	O|O	**83107**	...		...	...
		F4HT-18045-CB	O|O	**83107**	...		...	...
95-97	Models with with 15000, 17500, 19000 lb Taperleaf Springs	F4HT18080AA		...	...	O|O	**85314**	**89425**
		F4HT18080AB		...	...	O|O	**85314**	**89425**
		F4HT-18080-AA		...	...	O|O	**85314**	**89425**
		F4HT-18080-AB		...	...	O|O	**85314**	**89425**
95-98	Models with with 14600 lb Multileaf Spring	F4HT-18045-EA	O|O	**83125**	...		...	...
1995	Models with with 14600 lb Multileaf Spring	F4HT18045EA	O|O	**83125**	...		...	...

B7000

83-87	B - Series - Bus Cowl Chassis	E0HT18045AA	O|O	**83309**	...		...	...
		E0HT18045AB	O|O	**83309**	...		...	...
		E0HT-18045-AA	O|O	**83309**	...		...	...
		E0HT-18045-AB	O|O	**83309**	...		...	...
		F1HT18045AA	O|O	**83309**	...		...	...
		F1HT-18045-AA	O|O	**83309**	...		...	...

B - SERIES - BUS COWL CHASSIS

94-97	B - 700 with 21000 lb Taperleaf Springs	F4HT18080BA		...	...	O|O	**85001**	**89410**
		F4HT-18080-BA		...	...	O|O	**85001**	**89410**
94-97	B - 800 with 21000 lb Taperleaf Springs	F4HT18080BA		...	...	O|O	**85001**	**89410**
		F4HT-18080-BA		...	...	O|O	**85001**	**89410**

C600

80-86	Models with 3100 lb Spring and 7000 lb Axle	D7HT18045JA	O|O	**83308**	...		...	...

APPLICATION GUIDE - TRUCKS, TRAILERS AND BUSES

Year Ano Année	Model Modelo Modle	OEM #		Front			Rear	
				Fleetline	GasSLX		Fleetline	GasSLX
FORD (CONT'D)								
C600 (cont'd)								
80-86	Models with 3100 lb Spring and 7000 lb Axle	D7HT-18045-JA	○|○	83308	...		...	...
80-86	Models with 4040, 5040 lb Springs and 7000, 9000, 12000 lb Axles	D2EF18045AA	○|○	83312	89409		...	...
		D2EF-18045-AA	○|○	83312	89409		...	...
C700								
80-86	Models with 3100 lb Spring and 7000 lb Axle	D7HT18045JA	○|○	83308	...		...	...
		D7HT-18045-JA	○|○	83308	...		...	...
80-86	Models with 4040, 5040 lb Springs and 7000, 9000, 12000 lb Axles	D2EF18045AA	○|○	83312	89409		...	...
		D2EF-18045-AA	○|○	83312	89409		...	...
C800								
80-86	Models with 4040, 5040 lb Springs and 7000, 9000, 12000 lb Axles	D2EF18045AA	○|○	83312	89409		...	...
		D2EF-18045-AA	○|○	83312	89409		...	...
80-89	Models with 3100 lb Spring and 7000 lb Axle	D7HT18045JA	○|○	83308	...		...	...
		D7HT-18045-JA	○|○	83308	...		...	...
C7000								
80-86	Models with 3100 lb Spring and 7000 lb Axle	D7HT18045JA	○|○	83308	...		...	...
		D7HT-18045-JA	○|○	83308	...		...	...
80-86	Models with 4040, 5040 lb Springs and 7000, 9000, 12000 lb Axles	D2EF18045AA	○|○	83312	89409		...	...
		D2EF-18045-AA	○|○	83312	89409		...	...
C8000								
80-90	Models with 3100 lb Spring and 7000 lb Axle	D7HT18045JA	○|○	83308	...		...	...
		D7HT-18045-JA	○|○	83308	...		...	...
C & CT SERIES - TILT CAB								
64-66	C700/1100, CT-700/1100 with 7000, 9000, 11000, 15000 lb. Axles	D2HF18045CA	○|○	83308	...		...	...
		D2HF-18045-CA	○|○	83308	...		...	...
64-67	C-550, C-600, C-650, C-700, C-750 Models	C6PF18077F		...	...	○|○	83225	...
		C6PF-18077-F		...	...	○|○	83225	...
64-67	C-550, C-600 with 6000 lb. Axle - and Power Steering	C2TA18045A	○|○	83216	...		...	...
		C2TA-18045-A	○|○	83216	...		...	...
64-67	C-550, C-600 with 6000 lb. Axle - Exc. with Power Steering	C6PF18077A	○|○	G63306	...		...	...
		C6PF-18077-A	○|○	G63306	...		...	...
67-69	C-600, C-650, C-700, C-750, C-800, C-850, C-1000 with 7000, 9000, 11000, 12000,15000 lb. Axles - Exc. with 175" Wheel Base	D2HF18045CA	○|○	83308	...		...	...
		D2HF-18045-CA	○|○	83308	...		...	...
67-71	C-600, C-650, C-700, C-750, C-800, C-850, C-1000 with 7000, 9000, 11000, 12000,15000 lb. Axles and 175" Wheel Base	C8HA18045A	○|○	83312	89409		...	...
		C8HA-18045-A	○|○	83312	89409		...	...
71-73	C-500, C-550, C-600, C-650, C-700, C-750 with 6000 & 7000 lb. Axle	D1TF18045LA	○|○	83312	89409		...	...
		D1TF-18045-LA	○|○	83312	89409		...	...
69-79	C-750, C-800, C-850, C-900, CT-750, CT-800, CT-850, CT-900, CT-950 with 9000 lb. to 15000 lb. Axles	C8HA18045A	○|○	83312	89409		...	...
		C8HA-18045-A	○|○	83312	89409		...	...
		D1TF18045LA	○|○	83312	89409		...	...
		D1TF-18045-LA	○|○	83312	89409		...	...
		D2KF18045AA	○|○	83312	89409		...	...
		D2KF-18045-AA	○|○	83312	89409		...	...
76-79	C-600, C-700, C-750, C-800, C-900, CT-800, CT-900 Models	D2EF18045AA	○|○	83312	89409		...	...
		D2EF-18045-AA	○|○	83312	89409		...	...
		D7KF18045EA	○|○	83312	89409		...	...
		D7KF-18045-EA	○|○	83312	89409		...	...
87-89	C-600, C-700, C-800, C-7000, CT-800, CT-8000 with 4040, 5040 lb. Springs and 7000, 9000, 12000 lb. Axles	D2EF18045AA	○|○	83312	89409		...	...

Year Ano Année	Model Modelo Modle	OEM #		Front			Rear	
				Fleetline	GasSLX		Fleetline	GasSLX
FORD (CONT'D)								
C & CT SERIES - TILT CAB (cont'd)								
87-89	C-600, C-700, C-800, C-7000, CT-800, CT-8000 with 4040, 5040 lb. Springs and 7000, 9000, 12000 lb. Axles	D2EF-18045-AA	O|O	83312	89409		...	...
1990	C-600, C-700, C-800, C-7000, CT-800, CT-8000 with 4040, 5040 lb Springs and 7000, 9000, 12000 lb Axles	D2EF18045AA	O|O	83312	89409		...	...
		D2EF-18045-AA	O|O	83312	89409		...	...
CF7000								
86-97	Models with 12000 lb or 13000 lb Axle	.....		...	...	O|O	85302	89420
		87HU18045AA	O|O	85301	...		...	...
		87HU-18045-AA	O|O	85301	...		...	...
		E5HT18045AA	O|O	85301	...		...	...
		E5HT-18045-AA	O|O	85301	...		...	...
		E6HZ18124A	O|O	85301	...		...	...
		E6HZ-18124-A	O|O	85301	...		...	...
		E7HZ18124A	O|O	85301	...		...	...
		E7HZ-18124-A	O|O	85301	...		...	...
92-97	Models with 9000 lb Axle	F2HT18045BA	O|O	85376	...		...	...
		F2HT18045CA	O|O	85376	...		...	...
		F2HT-18045-BA	O|O	85376	...		...	...
		F2HT-18045-CA	O|O	85376	...		...	...
		F2HZ18124A	O|O	85376	...		...	...
		F2HZ-18124-A	O|O	85376	...		...	...
		F6HT18045LA	O|O	85376	...		...	...
		F6HT-18045-LA	O|O	85376	...		...	...
96-97	Models with 16000 lb. Multileaf Spring	F6HT18045AA	O|O	85054	...		...	...
		F6HT-18045-AA	O|O	85054	...		...	...
CF8000								
87-97	Models with 12000 lb or 13000 lb Axle	.....		...	...	O|O	85302	89420
		87HU18045AA	O|O	85301	...		...	...
		87HU-18045-AA	O|O	85301	...		...	...
		E5HT18045AA	O|O	85301	...		...	...
		E5HT-18045-AA	O|O	85301	...		...	...
		E6HZ18124A	O|O	85301	...		...	...
		E6HZ-18124-A	O|O	85301	...		...	...
		E7HZ18124A	O|O	85301	...		...	...
		E7HZ-18124-A	O|O	85301	...		...	...
92-97	Models with 9000 lb Axle	F2HT18045BA	O|O	85376	...		...	...
		F2HT18045CA	O|O	85376	...		...	...
		F2HT-18045-BA	O|O	85376	...		...	...
		F2HT-18045-CA	O|O	85376	...		...	...
		F2HZ18124A	O|O	85376	...		...	...
		F2HZ-18124-A	O|O	85376	...		...	...
		F6HT18045LA	O|O	85376	...		...	...
		F6HT-18045-LA	O|O	85376	...		...	...
96-97	Models with 16000 lb. Multileaf Spring	F6HT18045AA	O|O	85054	...		...	...
		F6HT-18045-AA	O|O	85054	...		...	...
CF SERIES (BRAZILIAN BUILT)								
86-89	CF - 600, CF - 700 Models	E5HT18045AA	O|O	85301	...		...	...
		E5HT18080DA		...	...	O|O	85315	...
		E5HT18080EA		...	...	O|O	85315	...
		E5HT-18045-AA	O|O	85301	...		...	...
		E5HT-18080-DA		...	...	O|O	85315	...
		E5HT-18080-EA		...	...	O|O	85315	...

APPLICATION GUIDE - TRUCKS, TRAILERS AND BUSES

Year Ano Année	Model Modelo Modle	OEM #		Front			Rear	
				Fleetline	GasSLX		Fleetline	GasSLX
FORD (CONT'D)								
CFT8000								
92-97	Models with 9000 lb Axle	F2HT18045BA	○|○	**85376**	...		...	...
		F2HT18045CA	○|○	**85376**	...		...	...
		F2HT-18045-BA	○|○	**85376**	...		...	...
		F2HT-18045-CA	○|○	**85376**	...		...	...
		F2HZ18124A	○|○	**85376**	...		...	...
		F2HZ-18124-A	○|○	**85376**	...		...	...
		F6HT18045LA	○|○	**85376**	...		...	...
		F6HT-18045-LA	○|○	**85376**	...		...	...
96-97	Models with 16000 lb. Multileaf Spring	F6HT18045AA	○|○	**85054**	...		...	...
		F6HT-18045-AA	○|○	**85054**	...		...	...
CL9000								
81-91	Models with O.E.M. Number	D7HT18045NA	○|○	**85301**	...		...	...
		D7HT-18045-NA	○|○	**85301**	...		...	...
81-91	Models with Rear Tandem Axle with Neway Suspension	D7HA18080AA		...	...	○|○	**83123**	**89405**
		D7HA-18080-AA		...	...	○|○	**83123**	**89405**
81-91	Models with Single Rear Axle Suspension	D4HA18080AA		...	...	○|○	**83209**	**89414**
		D4HA-18080-AA		...	...	○|○	**83209**	**89414**
90-91	Models with Multileaf Spring	F1HT18045NA	○|○	**85040**	...		...	...
		F1HT-18045-NA	○|○	**85040**	...		...	...
CL & CLT SERIES - HIGHWAY TRACTOR TILT CAB								
78-80	CL-9000, CLT-9000 Models	D7HT18045NA	○|○	**85301**	...		...	...
		D7HT-18045-NA	○|○	**85301**	...		...	...
78-80	CL-9000, CLT-9000 with Rear Tandem Axle with Neway Suspension	D7HA18080AA		...	...	○|○	**83123**	**89405**
		D7HA-18080-AA		...	...	○|○	**83123**	**89405**
78-80	CL-9000, CLT-9000 with Single Rear Axle Suspension	D4HA18080AA		...	...	○|○	**83209**	**89414**
		D4HA-18080-AA		...	...	○|○	**83209**	**89414**
	Models with Hendrickson Rear Air Suspension	47902-13		...	...	○|○	**83122**	**89406**
		4790213		...	...	○|○	**83122**	**89406**
CLT9000								
81-91	Models with O.E.M. Number	D7HT18045NA	○|○	**85301**	...		...	...
		D7HT-18045-NA	○|○	**85301**	...		...	...
81-91	Models with Rear Tandem Axle with Neway Suspension	D7HA18080AA		...	...	○|○	**83123**	**89405**
		D7HA-18080-AA		...	...	○|○	**83123**	**89405**
81-91	Models with Single Rear Axle Suspension	D4HA18080AA		...	...	○|○	**83209**	**89414**
		D4HA-18080-AA		...	...	○|○	**83209**	**89414**
90-91	Models with Multileaf Spring	F1HT18045NA	○|○	**85040**	...		...	...
		F1HT-18045-NA	○|○	**85040**	...		...	...
CT800D								
81-82	Models with 3100 lb Spring and 7000 lb Axle	D7HT18045JA	○|○	**83308**	...		...	...
		D7HT-18045-JA	○|○	**83308**	...		...	...
CT8000								
81-86	Models with 4040, 5040 lb Springs and 7000, 9000, 12000 lb Axles	D2EF18045AA	○|○	**83312**	**89409**		...	...
		D2EF-18045-AA	○|○	**83312**	**89409**		...	...
81-90	Models with 3100 lb Spring and 7000 lb Axle	D7HT18045JA	○|○	**83308**	...		...	...
		D7HT-18045-JA	○|○	**83308**	...		...	...
E-350 SUPER DUTY								
92-98	Type A School bus and Type C Motorhomes with Ford E350 Chassis	8C2Z18124D	–|○	**G63622**	...		...	...

FORD (CONT'D)

E-350 SUPER DUTY (cont'd)

Year Ano Année	Model Modelo Modle	OEM #	Front		Rear	
			Fleetline	GasSLX	Fleetline	GasSLX
92-98	Type A School bus and Type C Motorhomes with Ford E350 Chassis	8C2Z18125A	...	...	G63623	...
		8C2Z18125B	...	...	G63623	...
		8C2Z18125C	...	...	G63623	...
		8C2Z18125D	...	...	G63623	...
		8C2Z-18124-D	G63622	...	...	...
		8C2Z-18125-A	...	...	G63623	...
		8C2Z-18125-B	...	...	G63623	...
		8C2Z-18125-C	...	...	G63623	...
		8C2Z-18125-D	...	...	G63623	...
		8C24-18045-DA	G63622	...	...	...
		8C24-18080-DB	...	...	G63623	...
		8C2418045DA	G63622	...	...	...
		8C2418080DB	...	...	G63623	...
		ASH1136	...	...	G63623	...
		ASH1154	G63622	...	...	...
		ASH-1136	...	...	G63623	...
		ASH-1154	G63622	...	...	...
		AT163G	G63622	...	...	...
		AT164G	...	...	G63623	...
		AT-163G	G63622	...	...	...
		AT-164G	...	...	G63623	...
2020	Type A School bus and Type C Motorhomes with Ford E450 Chassis	8C2Z18124D	G63622	...	...	...
		8C2Z18125A	...	...	G63623	...
		8C2Z18125B	...	...	G63623	...
		8C2Z18125C	...	...	G63623	...
		8C2Z18125D	...	...	G63623	...
		8C2Z-18124-D	G63622	...	...	...
		8C2Z-18125-A	...	...	G63623	...
		8C2Z-18125-B	...	...	G63623	...
		8C2Z-18125-C	...	...	G63623	...
		8C2Z-18125-D	...	...	G63623	...
		8C24-18045-DA	G63622	...	...	...
		8C24-18080-DB	...	...	G63623	...
		8C2418045DA	G63622	...	...	...
		8C2418080DB	...	...	G63623	...
		ASH1136	...	...	G63623	...
		ASH1154	G63622	...	...	...
		ASH-1136	...	...	G63623	...
		ASH-1154	G63622	...	...	...
		AT163G	G63623	...	...	...
		AT164G	...	...	G63623	...
		AT-163G	G63622	...	...	...
		AT-164G	...	...	G63623	...

E-450 SUPER DUTY

92-02	Type A School bus and Type C Motorhomes with Ford E450 Chassis	8C2Z18124D	G63622	...	...	...
		8C2Z18125A	...	...	G63623	...
		8C2Z18125B	...	...	G63623	...
		8C2Z18125C	...	...	G63623	...
		8C2Z18125D	...	...	G63623	...
		8C2Z-18124-D	G63622	...	...	...
		8C2Z-18125-A	...	...	G63623	...
		8C2Z-18125-B	...	...	G63623	...
		8C2Z-18125-C	...	...	G63623	...

Year Ano Année	Model Modelo Modle	OEM #	Front		Rear	
			Fleetline	GasSLX	Fleetline	GasSLX

FORD (CONT'D)

E-450 SUPER DUTY (cont'd)

92-02	Type A School bus and Type C Motorhomes with Ford E450 Chassis	8C2Z-18125-D		...	...	−|○	G63623	...
		8C24-18045-DA	−|○	G63622	...		...	...
		8C24-18080-DB		...	...	−|○	G63623	...
		8C2418045DA	−|○	G63622	...		...	...
		8C2418080DB		...	...	−|○	G63623	...
		ASH1136		...	...	−|○	G63623	...
		ASH1154	−|○	G63622	...		...	...
		ASH-1136		...	...	−|○	G63623	...
		ASH-1154	−|○	G63622	...		...	...
		AT163G	−|○	G63622	...		...	...
		AT164G		...	...	−|○	G63623	...
		AT-163G	−|○	G63622	...		...	...
		AT-164G		...	...	−|○	G63623	...
2020	Type A School bus and Type C Motorhomes with Ford E450 Chassis	8C2Z18124D	−|○	G63622	...		...	...
		8C2Z18125A		...	...	−|○	G63623	...
		8C2Z18125B		...	...	−|○	G63623	...
		8C2Z18125C		...	...	−|○	G63623	...
		8C2Z18125D		...	...	−|○	G63623	...
		8C2Z-18124-D	−|○	G63622	...		...	...
		8C2Z-18125-A		...	...	−|○	G63623	...
		8C2Z-18125-B		...	...	−|○	G63623	...
		8C2Z-18125-C		...	...	−|○	G63623	...
		8C2Z-18125-D		...	...	−|○	G63623	...
		8C24-18045-DA	−|○	G63622	...		...	...
		8C24-18080-DB		...	...	−|○	G63623	...
		8C2418045DA	−|○	G63622	...		...	...
		8C2418080DB		...	...	−|○	G63623	...
		ASH1136		...	...	−|○	G63623	...
		ASH1154	−|○	G63622	...		...	...
		ASH-1136		...	...	−|○	G63623	...
		ASH-1154	−|○	G63622	...		...	...
		AT163G	−|○	G63622	...		...	...
		AT164G		...	...	−|○	G63623	...
		AT-163G	−|○	G63622	...		...	...
		AT-164G		...	...	−|○	G63623	...

F53

1998	MotorHomes with Ford F53 Chassis with 16,000 lb GVW to 22,000 lb GVW	1C34-18045-AA	○|○	83209	89414		...	...
		1C34-18045-JA	○|○	83209	89414		...	...
		1C3418045AA	○|○	83209	89414		...	...
		1C3418045JA	○|○	83209	89414		...	...
		9U9Z18124A	○|○	83209	89414		...	...
		9U9Z-18124-A	○|○	83209	89414		...	...
		9U94-18045-AA	○|○	83209	89414		...	...
		9U9418045AA	○|○	83209	89414		...	...
		ASH294	○|○	83209	89414		...	...
		ASH1022	○|○	83209	89414		...	...
		ASH1205	○|○	83209	89414		...	...
		ASH1228	○|○	83209	89414		...	...
		ASH1229	○|○	83209	89414		...	...
		ASH25822	○|○	83209	89414		...	...
		ASH25823	○|○	83209	89414		...	...
		ASH-294	○|○	83209	89414		...	...
		ASH-1022	○|○	83209	89414		...	...

APPLICATION GUIDE - TRUCKS, TRAILERS AND BUSES

Year Ano Année	Model Modelo Modle	OEM #		Front			Rear	
				Fleetline	GasSLX		Fleetline	GasSLX

FORD (CONT'D)

F53 (cont'd)

1998	MotorHomes with Ford F53 Chassis with 16,000 lb GVW to 22,000 lb GVW	ASH-1205	O|O	**83209**	**89414**		...	...
		ASH-1228	O|O	**83209**	**89414**		...	...
		ASH-1229	O|O	**83209**	**89414**		...	...
		ASH-25822	O|O	**83209**	**89414**		...	...
		ASH-25823	O|O	**83209**	**89414**		...	...
		AT620	O|O	**83209**	**89414**		...	...
		AT766	O|O	**83209**	**89414**		...	...
		AT-620	O|O	**83209**	**89414**		...	...
		AT-766	O|O	**83209**	**89414**		...	...
2005	MotorHomes with Ford F53 Chassis with 16,000 lb GVW to 22,000 lb GVW	1C34-18045-AA	O|O	**83209**	**89414**		...	...
		1C34-18045-JA	O|O	**83209**	**89414**		...	...
		1C3418045AA	O|O	**83209**	**89414**		...	...
		1C3418045JA	O|O	**83209**	**89414**		...	...
		9U9Z18124A	O|O	**83209**	**89414**		...	...
		9U9Z-18124-A	O|O	**83209**	**89414**		...	...
		9U94-18045-AA	O|O	**83209**	**89414**		...	...
		9U9418045AA	O|O	**83209**	**89414**		...	...
		ASH294	O|O	**83209**	**89414**		...	...
		ASH1022	O|O	**83209**	**89414**		...	...
		ASH1205	O|O	**83209**	**89414**		...	...
		ASH1228	O|O	**83209**	**89414**		...	...
		ASH1229	O|O	**83209**	**89414**		...	...
		ASH25822	O|O	**83209**	**89414**		...	...
		ASH25823	O|O	**83209**	**89414**		...	...
		ASH-294	O|O	**83209**	**89414**		...	...
		ASH-1022	O|O	**83209**	**89414**		...	...
		ASH-1205	O|O	**83209**	**89414**		...	...
		ASH-1228	O|O	**83209**	**89414**		...	...
		ASH-1229	O|O	**83209**	**89414**		...	...
		ASH-25822	O|O	**83209**	**89414**		...	...
		ASH-25823	O|O	**83209**	**89414**		...	...
		AT620	O|O	**83209**	**89414**		...	...
		AT766	O|O	**83209**	**89414**		...	...
		AT-620	O|O	**83209**	**89414**		...	...
		AT-766	O|O	**83209**	**89414**		...	...
2010	MotorHomes with Ford F53 Chassis with 16,000 lb GVW to 22,000 lb GVW	1C34-18045-AA	O|O	**83209**	**89414**		...	...
		1C34-18045-JA	O|O	**83209**	**89414**		...	...
		1C3418045AA	O|O	**83209**	**89414**		...	...
		1C3418045JA	O|O	**83209**	**89414**		...	...
		9U9Z18124A	O|O	**83209**	**89414**		...	...
		9U9Z-18124-A	O|O	**83209**	**89414**		...	...
		9U94-18045-AA	O|O	**83209**	**89414**		...	...
		9U9418045AA	O|O	**83209**	**89414**		...	...
		ASH294	O|O	**83209**	**89414**		...	...
		ASH1022	O|O	**83209**	**89414**		...	...
		ASH1205	O|O	**83209**	**89414**		...	...
		ASH1228	O|O	**83209**	**89414**		...	...
		ASH1229	O|O	**83209**	**89414**		...	...
		ASH25822	O|O	**83209**	**89414**		...	...
		ASH25823	O|O	**83209**	**89414**		...	...
		ASH-294	O|O	**83209**	**89414**		...	...
		ASH-1022	O|O	**83209**	**89414**		...	...
		ASH-1205	O|O	**83209**	**89414**		...	...
		ASH-1228	O|O	**83209**	**89414**		...	...

APPLICATION GUIDE - TRUCKS, TRAILERS AND BUSES

Year Ano Année	Model Modelo Modle	OEM #		Front			Rear	
				Fleetline	GasSLX		Fleetline	GasSLX
FORD (CONT'D)								
F53 (cont'd)								
2010	MotorHomes with Ford F53 Chassis with 16,000 lb GVW to 22,000 lb GVW	ASH-1229	O|O	83209	89414		...	...
		ASH-25822	O|O	83209	89414		...	...
		ASH-25823	O|O	83209	89414		...	...
		AT620	O|O	83209	89414		...	...
		AT766	O|O	83209	89414		...	...
		AT-620	O|O	83209	89414		...	...
		AT-766	O|O	83209	89414		...	...
F59								
11-21	F59 Commercial Chassis with 16,000 lb or 19,500 GVW	471700007117		...	...	O|O	85010	...
		471700009775		...	...	O|O	85010	...
		ASH12261		...	...	O|O	85010	...
		ASH24474		...	...	O|O	85010	...
		ASH24589		...	...	O|O	85010	...
		ASH-12261		...	...	O|O	85010	...
		ASH-24474		...	...	O|O	85010	...
		ASH-24523		...	...	O|O	85010	...
		ASH-24589		...	...	O|O	85010	...
		BU9Z18125A		...	...	O|O	85010	...
		BU9Z-18125-A		...	...	O|O	85010	...
		CU9Z18125A		...	...	O|O	85010	...
		CU9Z-18125-A		...	...	O|O	85010	...
		DU9Z18125A		...	...	O|O	85010	...
		DU9Z18125B		...	...	O|O	85010	...
		DU9Z-18125-A		...	...	O|O	85010	...
		DU9Z-18125-B		...	...	O|O	85010	...
		DU94-18080-CA		...	...	O|O	85010	...
		DU94-18080-CB		...	...	O|O	85010	...
		DU9418080CA		...	...	O|O	85010	...
		DU9418080CB		...	...	O|O	85010	...
11-21	F59 Commercial Chassis with 16,000 lb to 22,000 GVW	ASH12251	O|O	85013	89414		...	...
		ASH24473	O|O	85013	89414		...	...
		ASH24522	O|O	85013	89414		...	...
		ASH24634	O|O	85013	89414		...	...
		ASH-12251	O|O	85013	89414		...	...
		ASH-24473	O|O	85013	89414		...	...
		ASH-24522	O|O	85013	89414		...	...
		ASH-24634	O|O	85013	89414		...	...
		BU9Z18124A	O|O	85013	89414		...	...
		BU9Z-18124-A	O|O	85013	89414		...	...
		CU9Z18124A	O|O	85013	89414		...	...
		CU9Z-18124-A	O|O	85013	89414		...	...
		DU9Z18124A	O|O	85013	89414		...	...
		DU9Z18124B	O|O	85013	89414		...	...
		DU9Z-18124-A	O|O	85013	89414		...	...
		DU9Z-18124-B	O|O	85013	89414		...	...
88-97	F59 Commercial Chassis with 16,000 lb or 19,500 GVW	ASH12261		...	...	O|O	85010	...
		ASH24474		...	...	O|O	85010	...
		ASH24589		...	...	O|O	85010	...
		ASH-12261		...	...	O|O	85010	...
		ASH-24474		...	...	O|O	85010	...
		ASH-24523		...	...	O|O	85010	...
		ASH-24589		...	...	O|O	85010	...
		BU9Z18125A		...	...	O|O	85010	...

APPLICATION GUIDE - TRUCKS, TRAILERS AND BUSES

Year Ano Année	Model Modelo Modle	OEM #		Front			Rear	
				Fleetline	GasSLX		Fleetline	GasSLX

FORD (CONT'D)

F59 (cont'd)

88-97	F59 Commercial Chassis with 16,000 lb or 19,500 GVW	BU9Z-18125-A		...	...		85010	...
		CU9Z18125A		...	...		85010	...
		CU9Z-18125-A		...	...		85010	...
		DU9Z18125A		...	...		85010	...
		DU9Z18125B		...	...		85010	...
		DU9Z-18125-A		...	...		85010	...
		DU9Z-18125-B		...	...		85010	...
88-97	F59 Commercial Chassis with 16,000 lb to 22,000 GVW	ASH12251		85013	89414		...	...
		ASH24473		85013	89414		...	...
		ASH24522		85013	89414		...	...
		ASH24634		85013	89414		...	...
		ASH-12251		85013	89414		...	...
		ASH-24473		85013	89414		...	...
		ASH-24522		85013	89414		...	...
		ASH-24634		85013	89414		...	...
		BU9Z18124A		85013	89414		...	...
		BU9Z-18124-A		85013	89414		...	...
		CU9Z18124A		85013	89414		...	...
		CU9Z-18124-A		85013	89414		...	...
		DU9Z18124A		85013	89414		...	...
		DU9Z18124B		85013	89414		...	...
		DU9Z-18124-A		85013	89414		...	...
		DU9Z-18124-B		85013	89414		...	...
89-97	F59 Commercial Chassis with 16,000 lb or 19,500 GVW	471700007117		...	...		85010	...
		471700009775		...	...		85010	...
		DU94-18080-CA		...	...		85010	...
		DU94-18080-CB		...	...		85010	...
		DU9418080CA		...	...		85010	...
		DU9418080CB		...	...		85010	...

F600

83-89	Models with 9000 lb Axle with H.D. Suspension & 12000 lb Axle	D2HF18045AA		83314	...		...	...
		D2HF-18045-AA		83314	...		...	...
		D7HT18045CA		83314	...		...	...
		D7HT-18045-CA		83314	...		...	...
70-90	Models with 13000 & 15000 lb Rear Axle	D7HT18080BA		...	...		83225	...
		D7HT-18080-BA		...	...		83225	...
80-90	Models with 17000 & 18000 lb Rear Axle	D7HF18080AA		...	...		83215	...
		D7HF-18080-AA		...	...		83215	...
		D7HT18080DA		...	...		83215	...
		D7HT-18080-DA		...	...		83215	...
80-94	Exc. 9000 lb Axle with H.D. Suspension & 12000 lb Axle	E0HT18045AA		83309	...		...	...
		E0HT18045AB		83309	...		...	...
		E0HT-18045-AA		83309	...		...	...
		E0HT-18045-AB		83309	...		...	...
86-94	Models with O.E.M. Number	ASH24446		...	...		83215	...
		ASH-24446		...	...		83215	...
		AX310		...	...		83215	...
		AX-310		...	...		83215	...
		E6HT18080AA		...	...		83215	...
		E6HT-18080-AA		...	...		83215	...
		E6HZ18125D		...	...		83215	...
		E6HZ-18125-D		...	...		83215	...
1990	Models with Multileaf Spring	F1HT18045AA		83309	...		...	...

APPLICATION GUIDE - TRUCKS, TRAILERS AND BUSES

Year Ano Année	Model Modelo Modle	OEM #		Front			Rear	
				Fleetline	GasSLX		Fleetline	GasSLX
FORD (CONT'D)								
F600 (cont'd)								
1990	Models with Multileaf Spring	F1HT-18045-AA	○|○	**83309**	...		...	...
F600 LPO								
90-94	Models with O.E.M. Number	E9HS18080AA		...	...	○|○	**85716**	...
		E9HS-18080-AA		...	...	○|○	**85716**	...
F650								
00-02	Models with 8500 or 9000 lb Front Axle	3U2Z18124MAA	○|○	**83131**	...		...	...
		3U2Z-18124-MAA	○|○	**83131**	...		...	...
		AA494	○|○	**83131**	...		...	...
		AA-494	○|○	**83131**	...		...	...
		ASH397	○|○	**83131**	...		...	...
		ASH-397	○|○	**83131**	...		...	...
		XC3Z18124JA	○|○	**83131**	...		...	...
		XC3Z-18124-JA	○|○	**83131**	...		...	...
		XC35-18045-AB	○|○	**83131**	...		...	...
		XC35-18045-AD	○|○	**83131**	...		...	...
		XC35-18045-JA	○|○	**83131**	...		...	...
		XC3518045AB	○|○	**83131**	...		...	...
		XC3518045AD	○|○	**83131**	...		...	...
		XC3518045JA	○|○	**83131**	...		...	...
00-03	Models with 23,000 lb Multi-leaf Rear Springs	ASH2447		...	...	○|○	**83140**	...
		ASH-2447		...	...	○|○	**83140**	...
		AT696		...	...	○|○	**83140**	...
		AT-696		...	...	○|○	**83140**	...
		F81A18080ZC		...	...	○|○	**83140**	...
		F81A-18080-ZC		...	...	○|○	**83140**	...
		F81Z18125ZA		...	...	○|○	**83140**	...
		F81Z-18125-ZA		...	...	○|○	**83140**	...
00-03	Models with Hendrickson HAS - 190 Rear Air Suspension	1C44-18080-AA		...	...	○|○	**83123**	**89405**
		1C4418080AA		...	...	○|○	**83123**	**89405**
		60670-008		...	...	○|○	**83123**	**89405**
		60670-008L		...	...	○|○	**83123**	**89405**
		60670008		...	...	○|○	**83123**	**89405**
		60670008L		...	...	○|○	**83123**	**89405**
02-07	Models with Vari-Rate Rear Suspension	AA620		...	...	○|○	**83101**	...
		AA-620		...	...	○|○	**83101**	...
00-13	Models with 8,500 lb Front Suspension	4C4Z18124HB	○|○	**83135**	...		...	...
		4C4Z18124P	○|○	**83135**	...		...	...
		4C4Z-18124-HB	○|○	**83135**	...		...	...
		4C4Z-18124-P	○|○	**83135**	...		...	...
		3584117C2	○|○	**83135**	...		...	...
		AA615	○|○	**83135**	...		...	...
		AA-615	○|○	**83135**	...		...	...
		AT811	○|○	**83135**	...		...	...
		AT-811	○|○	**83135**	...		...	...
		FC4Z18124HB	○|○	**83135**	...		...	...
		FC4Z-18124-HB	○|○	**83135**	...		...	...
00-13	Models with 10,000 lb Front Suspension	4C4Z18124QA	○|○	**83175**	...		...	...
		4C4Z-18124-QA	○|○	**83175**	...		...	...
		3584116C1	○|○	**83175**	...		...	...
		3584116C2	○|○	**83175**	...		...	...
		AA616	○|○	**83175**	...		...	...
		AA-616	○|○	**83175**	...		...	...

FORD (CONT'D)

F650 (cont'd)

Year Ano Année	Model Modelo Modle	OEM #		Front			Rear	
				Fleetline	GasSLX		Fleetline	GasSLX
00-13	Models with 12,000 & 13,200 lb Front Springs	4C4Z18124JB	O|O	**85928**	...		...	...
		4C4Z18124RA	O|O	**85928**	...		...	...
		4C4Z-18124-JB	O|O	**85928**	...		...	...
		4C4Z-18124-RA	O|O	**85928**	...		...	...
		3584118C2	O|O	**85928**	...		...	...
		AA617	O|O	**85928**	...		...	...
		AA-617	O|O	**85928**	...		...	...
		AT812	O|O	**85928**	...		...	...
		AT-812	O|O	**85928**	...		...	...
03-13	Models with Hendrickson HAS - 230 Rear Air Suspension	4C4Z18125CA		...	...	O|O	**85976**	...
		4C4Z-18125-CA		...	...	O|O	**85976**	...
		60675-003		...	...	O|O	**85976**	...
		60675-003L		...	...	O|O	**85976**	...
		60675003		...	...	O|O	**85976**	...
		60675003L		...	...	O|O	**85976**	...
		ASH722		...	...	O|O	**85976**	...
		ASH1105		...	...	O|O	**85976**	...
		ASH-722		...	...	O|O	**85976**	...
		ASH-1105		...	...	O|O	**85976**	...
00-15	Models with 10,000 lb Front Suspension	2C44-18045-BA	O|O	**83175**	...		...	...
		2C4418045BA	O|O	**83175**	...		...	...
		ASH24492	O|O	**83175**	...		...	...
		ASH-24492	O|O	**83175**	...		...	...
04-15	Models with 21,000 lb Rear Air Suspension	4C4Z18125DA		...	...	O|O	**85926**	...
		4C4Z-18125-DA		...	...	O|O	**85926**	...
		3578858C1		...	...	O|O	**85926**	...
		3578858C2		...	...	O|O	**85926**	...
04-15	Models with 22,000 lb Multi-leaf Rear Springs	4C4Z18125B		...	...	–|O	**83317**	...
		4C4Z-18125-B		...	...	–|O	**83317**	...
		501906C91		...	...	–|O	**83317**	...
		501906C92		...	...	–|O	**83317**	...
		ASH24661		...	...	–|O	**83317**	...
		ASH-24661		...	...	–|O	**83317**	...
04-15	Models with International Air Suspension (4x2)	3553628C1		...	...	O|O	**85927**	...
		3553628C2		...	...	O|O	**85927**	...
		AA619		...	...	O|O	**85927**	...
		AA-619		...	...	O|O	**85927**	...
15-19	Models with 13,500, 15,500 & 19,000 lb Multi-leaf Rear Springs	471700011531		...	...	O|O	**85180**	...
		ASH24660		...	...	O|O	**85180**	...
		ASH-24660		...	...	O|O	**85180**	...
		FC4Z18125A		...	...	O|O	**85180**	...
		FC4Z-18125-A		...	...	O|O	**85180**	...
		FC44-18080-AB		...	...	O|O	**85180**	...
		FC4418080AB		...	...	O|O	**85180**	...
15-19	Models with 19.5" or 22.5" Wheels (22,000 lb GVW)	471700011530	O|O	**85181**	...		...	...
		ASH24658	O|O	**85181**	...		...	...
		ASH24659	O|O	**85181**	...		...	...
		ASH-24658	O|O	**85181**	...		...	...
		ASH-24659	O|O	**85181**	...		...	...
		FC4Z18124A	O|O	**85181**	...		...	...
		FC4Z18124B	O|O	**85181**	...		...	...
		FC4Z-18124-A	O|O	**85181**	...		...	...
		FC4Z-18124-B	O|O	**85181**	...		...	...
		FC44-18045-BB	O|O	**85181**	...		...	...

APPLICATION GUIDE - TRUCKS, TRAILERS AND BUSES

Year Ano Année	Model Modelo Modle	OEM #		Front			Rear	
				Fleetline	GasSLX		Fleetline	GasSLX

FORD (CONT'D)

F650 (cont'd)

15-19	Models with 19.5" or 22.5" Wheels (22,000 lb GVW)	FC4418045BB	○|○	**85181**	...		...	...
15-19	Models with Hendrickson HAS - 400/460 Rear Air Suspension	60675-014		...	...	○|○	**85978**	...
		60675014		...	...	○|○	**85978**	...
		ASH25838		...	...	○|○	**85978**	...
		ASH-25838		...	...	○|○	**85978**	...
		FC4Z18125E		...	...	○|○	**85978**	...
		FC4Z-18125-E		...	...	○|○	**85978**	...
15-19	Models with Hendrickson Rear Air Suspension	60670-012		...	...	○|○	**83168**	...
		60670012		...	...	○|○	**83168**	...
		ASH24662		...	...	○|○	**83168**	...
		ASH-24662		...	...	○|○	**83168**	...
		FC4Z18125C		...	...	○|○	**83168**	...
		FC4Z-18125-C		...	...	○|○	**83168**	...
15-23	Models with Hendrickson Rear Air Suspension	60670-011		...	...	○|○	**83148**	...
		60670011		...	...	○|○	**83148**	...
		ASH24663		...	...	○|○	**83148**	...
		ASH-24663		...	...	○|○	**83148**	...
		FC4Z18125D		...	...	○|○	**83148**	...
		FC4Z-18125-D		...	...	○|○	**83148**	...
21-23	Models with 13,500, 15,500 & 19,000 lb Multi-leaf Rear Springs	471700011531		...	...	○|○	**85180**	...
		ASH24660		...	...	○|○	**85180**	...
		ASH-24660		...	...	○|○	**85180**	...
		FC4Z18125A		...	...	○|○	**85180**	...
		FC4Z-18125-A		...	...	○|○	**85180**	...
		FC44-18080-AB		...	...	○|○	**85180**	...
		FC4418080AB		...	...	○|○	**85180**	...
21-23	Models with 19.5" or 22.5" Wheels (22,000 lb GVW)	471700011530	○|○	**85181**	...		...	...
		ASH24658	○|○	**85181**	...		...	...
		ASH24659	○|○	**85181**	...		...	...
		ASH-24658	○|○	**85181**	...		...	...
		ASH-24659	○|○	**85181**	...		...	...
		FC4Z18124A	○|○	**85181**	...		...	...
		FC4Z18124B	○|○	**85181**	...		...	...
		FC4Z-18124-A	○|○	**85181**	...		...	...
		FC4Z-18124-B	○|○	**85181**	...		...	...
		FC44-18045-BB	○|○	**85181**	...		...	...
		FC4418045BB	○|○	**85181**	...		...	...
21-23	Models with Hendrickson HAS - 400/460 Rear Air Suspension	60675-014		...	...	○|○	**85978**	...
		60675014		...	...	○|○	**85978**	...
		ASH25838		...	...	○|○	**85978**	...
		ASH-25838		...	...	○|○	**85978**	...
		FC4Z18125E		...	...	○|○	**85978**	...
		FC4Z-18125-E		...	...	○|○	**85978**	...
21-23	Models with Hendrickson Rear Air Suspension	60670-012		...	...	○|○	**83168**	...
		60670012		...	...	○|○	**83168**	...
		ASH24662		...	...	○|○	**83168**	...
		ASH-24662		...	...	○|○	**83168**	...
		FC4Z18125C		...	...	○|○	**83168**	...
		FC4Z-18125-C		...	...	○|○	**83168**	...
2014	...	4C4Z18124HB	○|○	**83135**	...		...	...
		4C4Z18124P	○|○	**83135**	...		...	...
		4C4Z-18124-HB	○|○	**83135**	...		...	...
		4C4Z-18124-P	○|○	**83135**	...		...	...
		3584117C2	○|○	**83135**	...		...	...

FORD (CONT'D)

F650 (cont'd)

Year Ano Année	Model Modelo Modle	OEM #		Front			Rear	
				Fleetline	GasSLX		Fleetline	GasSLX
2014	...	AA615	O|O	**83135**	...		...	...
		AA-615	O|O	**83135**	...		...	...
		AT811	O|O	**83135**	...		...	...
		AT-811	O|O	**83135**	...		...	...
		FC4Z18124HB	O|O	**83135**	...		...	...
		FC4Z-18124-HB	O|O	**83135**	...		...	...
2014	...	4C4Z18124QA	O|O	**83175**	...		...	...
		4C4Z-18124-QA	O|O	**83175**	...		...	...
		3584116C1	O|O	**83175**	...		...	...
		3584116C2	O|O	**83175**	...		...	...
		AA616	O|O	**83175**	...		...	...
		AA-616	O|O	**83175**	...		...	...
2014	...	4C4Z18124JB	O|O	**85928**	...		...	...
		4C4Z18124RA	O|O	**85928**	...		...	...
		4C4Z-18124-JB	O|O	**85928**	...		...	...
		4C4Z-18124-RA	O|O	**85928**	...		...	...
		3584118C2	O|O	**85928**	...		...	...
		AA617	O|O	**85928**	...		...	...
		AA-617	O|O	**85928**	...		...	...
		AT812	O|O	**85928**	...		...	...
		AT-812	O|O	**85928**	...		...	...
2014	...	4C4Z18125CA		...	...	O|O	**85976**	...
		4C4Z-18125-CA		...	...	O|O	**85976**	...
		60675-003		...	...	O|O	**85976**	...
		60675-003L		...	...	O|O	**85976**	...
		60675003		...	...	O|O	**85976**	...
		60675003L		...	...	O|O	**85976**	...
		ASH722		...	...	O|O	**85976**	...
		ASH1105		...	...	O|O	**85976**	...
		ASH-722		...	...	O|O	**85976**	...
		ASH-1105		...	...	O|O	**85976**	...
2015	Models with 8,500 lb Front Suspension	4C4Z18124HB	O|O	**83135**	...		...	...
		4C4Z18124P	O|O	**83135**	...		...	...
		4C4Z-18124-HB	O|O	**83135**	...		...	...
		4C4Z-18124-P	O|O	**83135**	...		...	...
		3584117C2	O|O	**83135**	...		...	...
		AA615	O|O	**83135**	...		...	...
		AA-615	O|O	**83135**	...		...	...
		AT811	O|O	**83135**	...		...	...
		AT-811	O|O	**83135**	...		...	...
		FC4Z18124HB	O|O	**83135**	...		...	...
		FC4Z-18124-HB	O|O	**83135**	...		...	...
2015	Models with 10,000 lb Front Suspension	4C4Z18124QA	O|O	**83175**	...		...	...
		4C4Z-18124-QA	O|O	**83175**	...		...	...
		3584116C1	O|O	**83175**	...		...	...
		3584116C2	O|O	**83175**	...		...	...
		AA616	O|O	**83175**	...		...	...
		AA-616	O|O	**83175**	...		...	...
2015	Models with 12,000 & 13,200 lb Front Springs	4C4Z18124JB	O|O	**85928**	...		...	...
		4C4Z18124RA	O|O	**85928**	...		...	...
		4C4Z-18124-JB	O|O	**85928**	...		...	...
		4C4Z-18124-RA	O|O	**85928**	...		...	...
		3584118C2	O|O	**85928**	...		...	...
		AA617	O|O	**85928**	...		...	...

APPLICATION GUIDE - TRUCKS, TRAILERS AND BUSES

FORD (CONT'D)

F650 (cont'd)

Year Ano Année	Model Modelo Modle	OEM #		Front Fleetline	Front GasSLX		Rear Fleetline	Rear GasSLX
2015	Models with 12,000 & 13,200 lb Front Springs	AA-617	○|○	**85928**	...		...	...
		AT812	○|○	**85928**	...		...	...
		AT-812	○|○	**85928**	...		...	...
2015	Models with Hendrickson HAS - 230 Rear Air Suspension	4C4Z18125CA		...	...	○|○	**85976**	...
		4C4Z-18125-CA		...	...	○|○	**85976**	...
		60675-003		...	...	○|○	**85976**	...
		60675-003L		...	...	○|○	**85976**	...
		60675003		...	...	○|○	**85976**	...
		60675003L		...	...	○|○	**85976**	...
		ASH722		...	...	○|○	**85976**	...
		ASH1105		...	...	○|○	**85976**	...
		ASH-722		...	...	○|○	**85976**	...
		ASH-1105		...	...	○|○	**85976**	...

F700

70-89	Models with 13000 & 15000 lb Rear Axle	D7HT-18080-BA		...	...	○|○	**83225**	...
83-89	Models with 9000 lb Axle with H.D. Suspension & 12000 lb Axle	D2HF18045AA	○|○	**83314**	...		...	...
		D2HF-18045-AA	○|○	**83314**	...		...	...
		D7HT18045CA	○|○	**83314**	...		...	...
		D7HT-18045-CA	○|○	**83314**	...		...	...
70-90	Models with 13000 & 15000 lb Rear Axle	D7HT18080BA		...	...	○|○	**83225**	...
80-90	Models with 17000 & 18000 lb Rear Axle	D7HF18080AA		...	...	○|○	**83215**	...
		D7HF-18080-AA		...	...	○|○	**83215**	...
		D7HT18080DA		...	...	○|○	**83215**	...
		D7HT-18080-DA		...	...	○|○	**83215**	...
80-94	Exc. 9000 lb Axle with H.D. Suspension & 12000 lb Axle	E0HT18045AA	○|○	**83309**	...		...	...
		E0HT18045AB	○|○	**83309**	...		...	...
		E0HT-18045-AA	○|○	**83309**	...		...	...
		E0HT-18045-AB	○|○	**83309**	...		...	...
94-97	Models with 52" or 54" Taperleaf Springs and with 10000 or 12000 lb Axle	F4HT18045DA	○|○	**85063**	...		...	...
		F4HT-18045-DA	○|○	**85063**	...		...	...
		F5HZ18124C	○|○	**85063**	...		...	...
		F5HZ-18124-C	○|○	**85063**	...		...	...
94-97	Models with with 15000, 17500, 19000 lb Taperleaf Springs	F4HT18080AA		...	...	○|○	**85314**	**89425**
		F4HT18080AB		...	...	○|○	**85314**	**89425**
		F4HT-18080-AA		...	...	○|○	**85314**	**89425**
		F4HT-18080-AB		...	...	○|○	**85314**	**89425**
94-97	w/ Multileaf Spring and w/ 10000, 12000 or 13200 lb Axle	F4HT18045CB	○|○	**83107**	...		...	...
		F4HT-18045-CB	○|○	**83107**	...		...	...
		F5HZ18124B	○|○	**83107**	...		...	...
		F5HZ-18124-B	○|○	**83107**	...		...	...
86-98	Models with O.E.M. Number	ASH24446		...	...	○|○	**83215**	...
		ASH-24446		...	...	○|○	**83215**	...
		AX310		...	...	○|○	**83215**	...
		AX-310		...	...	○|○	**83215**	...
		E6HT18080AA		...	...	○|○	**83215**	...
		E6HT-18080-AA		...	...	○|○	**83215**	...
		E6HZ18125D		...	...	○|○	**83215**	...
		E6HZ-18125-D		...	...	○|○	**83215**	...
94-98	Models with Taperleaf Springs and with 6000, 7000, 8500, 9000 lb Axle	F4HT18045AB	○|○	**83314**	...		...	...
		F4HT18045AC	○|○	**83314**	...		...	...
		F4HT-18045-AB	○|○	**83314**	...		...	...
		F4HT-18045-AC	○|○	**83314**	...		...	...
		F5HZ18124A	○|○	**83314**	...		...	...

APPLICATION GUIDE - TRUCKS, TRAILERS AND BUSES

Year Ano Année	Model Modelo Modle	OEM #		Front			Rear	
				Fleetline	GasSLX		Fleetline	GasSLX
FORD (CONT'D)								
F700 (cont'd)								
94-98	Models with Taperleaf Springs and with 6000, 7000, 8500, 9000 lb Axle	F5HZ-18124-A	O|O	**83314**	...		...	...
94-98	Models with with 15000, 17500, 19000 lb Taperleaf Springs	F5HZ18125A		...	...	O|O	**85314**	**89425**
		F5HZ-18125-A		...	...	O|O	**85314**	**89425**
1990	Models with Multileaf Spring	F1HT18045AA	O|O	**83309**	...		...	...
		F1HT-18045-AA	O|O	**83309**	...		...	...
1994	Models with with 14600 lb Multileaf Spring	F4HT18045EA	O|O	**83125**	...		...	...
		F4HT-18045-EA	O|O	**83125**	...		...	...
		F5HZ18124D	O|O	**83125**	...		...	...
		F5HZ-18124-D	O|O	**83125**	...		...	...
F700 LPO								
90-94	Models with O.E.M. Number	E9HS18080AA		...	...	O|O	**85716**	...
		E9HS-18080-AA		...	...	O|O	**85716**	...
F750								
00-02	Models with 8500 or 9000 lb Front Axle	3U2Z18124MAA	O|O	**83131**	...		...	...
		3U2Z-18124-MAA	O|O	**83131**	...		...	...
		AA494	O|O	**83131**	...		...	...
		AA-494	O|O	**83131**	...		...	...
		ASH397	O|O	**83131**	...		...	...
		ASH-397	O|O	**83131**	...		...	...
		XC3Z18124JA	O|O	**83131**	...		...	...
		XC3Z-18124-JA	O|O	**83131**	...		...	...
		XC35-18045-AB	O|O	**83131**	...		...	...
		XC35-18045-AD	O|O	**83131**	...		...	...
		XC35-18045-JA	O|O	**83131**	...		...	...
		XC3518045AB	O|O	**83131**	...		...	...
		XC3518045AD	O|O	**83131**	...		...	...
		XC3518045JA	O|O	**83131**	...		...	...
00-03	Models with 23,000 lb Multi-leaf Rear Springs	ASH2447		...	...	O|O	**83140**	...
		ASH-2447		...	...	O|O	**83140**	...
		AT696		...	...	O|O	**83140**	...
		AT-696		...	...	O|O	**83140**	...
		F81A18080ZC		...	...	O|O	**83140**	...
		F81A-18080-ZC		...	...	O|O	**83140**	...
		F81Z18125ZA		...	...	O|O	**83140**	...
		F81Z-18125-ZA		...	...	O|O	**83140**	...
00-03	Models with Hendrickson HAS - 190 Rear Air Suspension	1C44-18080-AA		...	...	O|O	**83123**	**89405**
		1C4418080AA		...	...	O|O	**83123**	**89405**
		60670-008		...	...	O|O	**83123**	**89405**
		60670-008L		...	...	O|O	**83123**	**89405**
		60670008		...	...	O|O	**83123**	**89405**
		60670008L		...	...	O|O	**83123**	**89405**
02-07	Models with Vari-Rate Rear Suspension	AA620		...	...	O|O	**83101**	...
		AA-620		...	...	O|O	**83101**	...
00-13	Models with 8,500 lb Front Suspension	4C4Z18124HB	O|O	**83135**	...		...	...
		4C4Z18124P	O|O	**83135**	...		...	...
		4C4Z-18124-HB	O|O	**83135**	...		...	...
		4C4Z-18124-P	O|O	**83135**	...		...	...
		3584117C2	O|O	**83135**	...		...	...
		AA615	O|O	**83135**	...		...	...
		AA-615	O|O	**83135**	...		...	...
		AT811	O|O	**83135**	...		...	...
		AT-811	O|O	**83135**	...		...	...

APPLICATION GUIDE - TRUCKS, TRAILERS AND BUSES

Year Ano Année	Model Modelo Modle	OEM #		Front			Rear	
				Fleetline	GasSLX		Fleetline	GasSLX
FORD (CONT'D)								
F750 (cont'd)								
00-13	Models with 8,500 lb Front Suspension	FC4Z18124HB	O|O	**83135**	...		...	...
		FC4Z-18124-HB	O|O	**83135**	...		...	...
00-13	Models with 10,000 lb Front Suspension	4C4Z18124QA	O|O	**83175**	...		...	...
		4C4Z-18124-QA	O|O	**83175**	...		...	...
		3584116C1	O|O	**83175**	...		...	...
		3584116C2	O|O	**83175**	...		...	...
		AA616	O|O	**83175**	...		...	...
		AA-616	O|O	**83175**	...		...	...
00-13	Models with 12,000 & 13,200 lb Front Springs	4C4Z18124JB	O|O	**85928**	...		...	...
		4C4Z18124RA	O|O	**85928**	...		...	...
		4C4Z-18124-JB	O|O	**85928**	...		...	...
		4C4Z-18124-RA	O|O	**85928**	...		...	...
		3584118C2	O|O	**85928**	...		...	...
		AA617	O|O	**85928**	...		...	...
		AA-617	O|O	**85928**	...		...	...
		AT812	O|O	**85928**	...		...	...
		AT-812	O|O	**85928**	...		...	...
03-13	Models with Hendrickson HAS - 230 Rear Air Suspension	4C4Z18125CA		...	...	O|O	**85976**	...
		4C4Z-18125-CA		...	...	O|O	**85976**	...
		60675-003		...	...	O|O	**85976**	...
		60675-003L		...	...	O|O	**85976**	...
		60675003		...	...	O|O	**85976**	...
		60675003L		...	...	O|O	**85976**	...
		ASH722		...	...	O|O	**85976**	...
		ASH1105		...	...	O|O	**85976**	...
		ASH-722		...	...	O|O	**85976**	...
		ASH-1105		...	...	O|O	**85976**	...
00-15	Models with 10,000 lb Front Suspension	2C44-18045-BA	O|O	**83175**	...		...	...
		2C4418045BA	O|O	**83175**	...		...	...
		ASH24492	O|O	**83175**	...		...	...
		ASH-24492	O|O	**83175**	...		...	...
04-15	Models with 21,000 lb Rear Air Suspension	4C4Z18125DA		...	...	O|O	**85926**	...
		4C4Z-18125-DA		...	...	O|O	**85926**	...
		3578858C1		...	...	O|O	**85926**	...
		3578858C2		...	...	O|O	**85926**	...
04-15	Models with 22,000 lb Multi-leaf Rear Springs	4C4Z18125B		...	...	–|O	**83317**	...
		4C4Z-18125-B		...	...	–|O	**83317**	...
		501906C91		...	...	–|O	**83317**	...
		501906C92		...	...	–|O	**83317**	...
		ASH24661		...	...	–|O	**83317**	...
		ASH-24661		...	...	–|O	**83317**	...
04-15	Models with International Air Suspension (4x2)	3553628C1		...	...	O|O	**85927**	...
		3553628C2		...	...	O|O	**85927**	...
		AA619		...	...	O|O	**85927**	...
		AA-619		...	...	O|O	**85927**	...
15-19	Models with 13,500, 15,500 & 19,000 lb Multi-leaf Rear Springs	471700011531		...	...	O|O	**85180**	...
		ASH24660		...	...	O|O	**85180**	...
		ASH-24660		...	...	O|O	**85180**	...
		FC4Z18125A		...	...	O|O	**85180**	...
		FC4Z-18125-A		...	...	O|O	**85180**	...
		FC44-18080-AB		...	...	O|O	**85180**	...
		FC4418080AB		...	...	O|O	**85180**	...
15-19	Models with 19.5" or 22.5" Wheels (22,000 lb GVW)	471700011530	O|O	**85181**	...		...	...
		ASH24658	O|O	**85181**	...		...	...

Year Ano Année	Model Modelo Modle	OEM #		Front			Rear	
				Fleetline	GasSLX		Fleetline	GasSLX
FORD (CONT'D)								
F750 (cont'd)								
15-19	Models with 19.5" or 22.5" Wheels (22,000 lb GVW)	ASH24659	O|O	**85181**	...		...	...
		ASH-24658	O|O	**85181**	...		...	...
		ASH-24659	O|O	**85181**	...		...	...
		FC4Z18124A	O|O	**85181**	...		...	...
		FC4Z18124B	O|O	**85181**	...		...	...
		FC4Z-18124-A	O|O	**85181**	...		...	...
		FC4Z-18124-B	O|O	**85181**	...		...	...
		FC44-18045-BB	O|O	**85181**	...		...	...
		FC4418045BB	O|O	**85181**	...		...	...
15-19	Models with Hendrickson HAS - 400/460 Rear Air Suspension	60675-014		...	...	O|O	**85978**	...
		60675014		...	...	O|O	**85978**	...
		ASH25838		...	...	O|O	**85978**	...
		ASH-25838		...	...	O|O	**85978**	...
		FC4Z18125E		...	...	O|O	**85978**	...
		FC4Z-18125-E		...	...	O|O	**85978**	...
15-19	Models with Hendrickson Rear Air Suspension	60670-012		...	...	O|O	**83168**	...
		60670012		...	...	O|O	**83168**	...
		ASH24662		...	...	O|O	**83168**	...
		ASH-24662		...	...	O|O	**83168**	...
		FC4Z18125C		...	...	O|O	**83168**	...
		FC4Z-18125-C		...	...	O|O	**83168**	...
15-23	Models with Hendrickson Rear Air Suspension	60670-011		...	...	O|O	**83148**	...
		60670011		...	...	O|O	**83148**	...
		ASH24663		...	...	O|O	**83148**	...
		ASH-24663		...	...	O|O	**83148**	...
		FC4Z18125D		...	...	O|O	**83148**	...
		FC4Z-18125-D		...	...	O|O	**83148**	...
21-23	Models with 13,500, 15,500 & 19,000 lb Multi-leaf Rear Springs	471700011531		...	...	O|O	**85180**	...
		ASH24660		...	...	O|O	**85180**	...
		ASH-24660		...	...	O|O	**85180**	...
		FC4Z18125A		...	...	O|O	**85180**	...
		FC4Z-18125-A		...	...	O|O	**85180**	...
		FC44-18080-AB		...	...	O|O	**85180**	...
		FC4418080AB		...	...	O|O	**85180**	...
21-23	Models with 19.5" or 22.5" Wheels (22,000 lb GVW)	471700011530	O|O	**85181**	...		...	...
		ASH24658	O|O	**85181**	...		...	...
		ASH24659	O|O	**85181**	...		...	...
		ASH-24658	O|O	**85181**	...		...	...
		ASH-24659	O|O	**85181**	...		...	...
		FC4Z18124A	O|O	**85181**	...		...	...
		FC4Z18124B	O|O	**85181**	...		...	...
		FC4Z-18124-A	O|O	**85181**	...		...	...
		FC4Z-18124-B	O|O	**85181**	...		...	...
		FC44-18045-BB	O|O	**85181**	...		...	...
		FC4418045BB	O|O	**85181**	...		...	...
21-23	Models with Hendrickson HAS - 400/460 Rear Air Suspension	60675-014		...	...	O|O	**85978**	...
		60675014		...	...	O|O	**85978**	...
		ASH25838		...	...	O|O	**85978**	...
		ASH-25838		...	...	O|O	**85978**	...
		FC4Z18125E		...	...	O|O	**85978**	...
		FC4Z-18125-E		...	...	O|O	**85978**	...
21-23	Models with Hendrickson Rear Air Suspension	60670-012		...	...	O|O	**83168**	...
		60670012		...	...	O|O	**83168**	...
		ASH24662		...	...	O|O	**83168**	...

APPLICATION GUIDE - TRUCKS, TRAILERS AND BUSES

Year Ano Année	Model Modelo Modle	OEM #		Front			Rear	
				Fleetline	GasSLX		Fleetline	GasSLX
FORD (CONT'D)								
F750 (cont'd)								
21-23	Models with Hendrickson Rear Air Suspension	ASH-24662		...	...	O|O	**83168**	...
		FC4Z18125C		...	...	O|O	**83168**	...
		FC4Z-18125-C		...	...	O|O	**83168**	...
2014	...	4C4Z18124HB	O|O	**83135**	...		...	...
		4C4Z18124P	O|O	**83135**	...		...	...
		4C4Z-18124-HB	O|O	**83135**	...		...	...
		4C4Z-18124-P	O|O	**83135**	...		...	...
		3584117C2	O|O	**83135**	...		...	...
		AA615	O|O	**83135**	...		...	...
		AA-615	O|O	**83135**	...		...	...
		AT811	O|O	**83135**	...		...	...
		AT-811	O|O	**83135**	...		...	...
		FC4Z18124HB	O|O	**83135**	...		...	...
		FC4Z-18124-HB	O|O	**83135**	...		...	...
2014	...	4C4Z18124QA	O|O	**83175**	...		...	...
		4C4Z-18124-QA	O|O	**83175**	...		...	...
		3584116C1	O|O	**83175**	...		...	...
		3584116C2	O|O	**83175**	...		...	...
		AA616	O|O	**83175**	...		...	...
		AA-616	O|O	**83175**	...		...	...
2014	...	4C4Z18124JB	O|O	**85928**	...		...	...
		4C4Z18124RA	O|O	**85928**	...		...	...
		4C4Z-18124-JB	O|O	**85928**	...		...	...
		4C4Z-18124-RA	O|O	**85928**	...		...	...
		3584118C2	O|O	**85928**	...		...	...
		AA617	O|O	**85928**	...		...	...
		AA-617	O|O	**85928**	...		...	...
		AT812	O|O	**85928**	...		...	...
		AT-812	O|O	**85928**	...		...	...
2014	...	4C4Z18125CA		...	...	O|O	**85976**	...
		4C4Z-18125-CA		...	...	O|O	**85976**	...
		60675-003		...	...	O|O	**85976**	...
		60675-003L		...	...	O|O	**85976**	...
		60675003		...	...	O|O	**85976**	...
		60675003L		...	...	O|O	**85976**	...
		ASH722		...	...	O|O	**85976**	...
		ASH1105		...	...	O|O	**85976**	...
		ASH-722		...	...	O|O	**85976**	...
		ASH-1105		...	...	O|O	**85976**	...
2015	Models with 8,500 lb Front Suspension	4C4Z18124HB	O|O	**83135**	...		...	...
		4C4Z18124P	O|O	**83135**	...		...	...
		4C4Z-18124-HB	O|O	**83135**	...		...	...
		4C4Z-18124-P	O|O	**83135**	...		...	...
		3584117C2	O|O	**83135**	...		...	...
		AA615	O|O	**83135**	...		...	...
		AA-615	O|O	**83135**	...		...	...
		AT811	O|O	**83135**	...		...	...
		AT-811	O|O	**83135**	...		...	...
		FC4Z18124HB	O|O	**83135**	...		...	...
		FC4Z-18124-HB	O|O	**83135**	...		...	...
2015	Models with 10,000 lb Front Suspension	4C4Z18124QA	O|O	**83175**	...		...	...
		4C4Z-18124-QA	O|O	**83175**	...		...	...
		3584116C1	O|O	**83175**	...		...	...
		3584116C2	O|O	**83175**	...		...	...

APPLICATION GUIDE - TRUCKS, TRAILERS AND BUSES

Year Ano Année	Model Modelo Modle	OEM #		Front			Rear	
				Fleetline	GasSLX		Fleetline	GasSLX
FORD (CONT'D)								
F750 (cont'd)								
2015	Models with 10,000 lb Front Suspension	AA616	O|O	**83175**	...		...	...
		AA-616	O|O	**83175**	...		...	...
2015	Models with 12,000 & 13,200 lb Front Springs	4C4Z18124JB	O|O	**85928**	...		...	...
		4C4Z18124RA	O|O	**85928**	...		...	...
		4C4Z-18124-JB	O|O	**85928**	...		...	...
		4C4Z-18124-RA	O|O	**85928**	...		...	...
		3584118C2	O|O	**85928**	...		...	...
		AA617	O|O	**85928**	...		...	...
		AA-617	O|O	**85928**	...		...	...
		AT812	O|O	**85928**	...		...	...
		AT-812	O|O	**85928**	...		...	...
2015	Models with Hendrickson HAS - 230 Rear Air Suspension	4C4Z18125CA		...	...	O|O	**85976**	...
		4C4Z-18125-CA		...	...	O|O	**85976**	...
		60675-003		...	...	O|O	**85976**	...
		60675-003L		...	...	O|O	**85976**	...
		60675003		...	...	O|O	**85976**	...
		60675003L		...	...	O|O	**85976**	...
		ASH722		...	...	O|O	**85976**	...
		ASH1105		...	...	O|O	**85976**	...
		ASH-722		...	...	O|O	**85976**	...
		ASH-1105		...	...	O|O	**85976**	...
F800								
80-89	Models with 13000 & 15000 lb Rear Axle	D7HT-18080-BA		...	...	O|O	**83225**	...
83-89	Models with 9000 lb Axle with H.D. Suspension & 12000 lb Axle	D2HF18045AA	O|O	**83314**	...		...	...
		D2HF-18045-AA	O|O	**83314**	...		...	...
		D7HT18045CA	O|O	**83314**	...		...	...
		D7HT-18045-CA	O|O	**83314**	...		...	...
80-90	Models with 13000 & 15000 lb Rear Axle	D7HT18080BA		...	...	O|O	**83225**	...
80-90	Models with 17000 & 18000 lb Rear Axle	D7HF18080AA		...	...	O|O	**83215**	...
		D7HF-18080-AA		...	...	O|O	**83215**	...
		D7HT18080DA		...	...	O|O	**83215**	...
		D7HT-18080-DA		...	...	O|O	**83215**	...
80-94	Exc. 9000 lb Axle with H.D. Suspension & 12000 lb Axle	E0HT18045AA	O|O	**83309**	...		...	...
		E0HT18045AB	O|O	**83309**	...		...	...
		E0HT-18045-AA	O|O	**83309**	...		...	...
		E0HT-18045-AB	O|O	**83309**	...		...	...
86-97	Models with O.E.M. Number	ASH24446		...	...	O|O	**83215**	...
		ASH-24446		...	...	O|O	**83215**	...
		AX310		...	...	O|O	**83215**	...
		AX-310		...	...	O|O	**83215**	...
		E6HT18080AA		...	...	O|O	**83215**	...
		E6HT-18080-AA		...	...	O|O	**83215**	...
		E6HZ18125D		...	...	O|O	**83215**	...
		E6HZ-18125-D		...	...	O|O	**83215**	...
94-97	Models with 52" or 54" Taperleaf Springs and with 10000 or 12000 lb Axle	F4HT18045DA	O|O	**85063**	...		...	...
		F4HT-18045-DA	O|O	**85063**	...		...	...
		F5HZ18124C	O|O	**85063**	...		...	...
		F5HZ-18124-C	O|O	**85063**	...		...	...
94-97	Models with 21000 Taperleaf Springs	F4HT18080BA		...	...	O|O	**85001**	**89410**
		F4HT-18080-BA		...	...	O|O	**85001**	**89410**
94-97	Models with with 15000, 17500, 19000 lb Taperleaf Springs	F4HT18080AA		...	...	O|O	**85314**	**89425**
		F4HT18080AB		...	...	O|O	**85314**	**89425**
		F4HT-18080-AA		...	...	O|O	**85314**	**89425**

APPLICATION GUIDE - TRUCKS, TRAILERS AND BUSES

Year Ano Année	Model Modelo Modle	OEM #		Front			Rear	
				Fleetline	GasSLX		Fleetline	GasSLX
FORD (CONT'D)								
F800 (cont'd)								
94-97	Models with with 15000, 17500, 19000 lb Taperleaf Springs	F4HT-18080-AB		...	...	O|O	85314	89425
94-98	Models with Taperleaf Springs and with 6000, 7000, 8500, 9000 lb Axle	F4HT18045AB	O|O	83314	...		...	...
		F4HT18045AC	O|O	83314	...		...	...
		F4HT-18045-AB	O|O	83314	...		...	...
		F4HT-18045-AC	O|O	83314	...		...	...
		F5HZ18124A	O|O	83314	...		...	...
		F5HZ-18124-A	O|O	83314	...		...	...
94-98	Models with with 15000, 17500, 19000 lb Taperleaf Springs	F5HZ18125A		...	...	O|O	85314	89425
		F5HZ-18125-A		...	...	O|O	85314	89425
1990	Models with Multileaf Spring	F1HT18045AA	O|O	83309	...		...	...
		F1HT-18045-AA	O|O	83309	...		...	...
1994	Models with with 14600 lb Multileaf Spring	F4HT18045EA	O|O	83125	...		...	...
		F4HT-18045-EA	O|O	83125	...		...	...
		F5HZ18124D	O|O	83125	...		...	...
		F5HZ-18124-D	O|O	83125	...		...	...
1994	w/ Multileaf Spring and w/ 10000, 12000 or 13200 lb Axle	F4HT18045CB	O|O	83107	...		...	...
		F4HT-18045-CB	O|O	83107	...		...	...
		F5HZ18124B	O|O	83107	...		...	...
		F5HZ-18124-B	O|O	83107	...		...	...
F7000								
80-87	Exc. 9000 lb Axle with H.D. Suspension & 12000 lb Axle	E0HT18045AA	O|O	83309	...		...	...
		E0HT18045AB	O|O	83309	...		...	...
		E0HT-18045-AA	O|O	83309	...		...	...
		E0HT-18045-AB	O|O	83309	...		...	...
83-87	Models with 9000 lb Axle with H.D. Suspension & 12000 lb Axle	D2HF18045AA	O|O	83314	...		...	...
		D2HF-18045-AA	O|O	83314	...		...	...
		D7HT18045CA	O|O	83314	...		...	...
		D7HT-18045-CA	O|O	83314	...		...	...
F8000								
83-87	Exc. 9000 lb Axle with H.D. Suspension & 12000 lb Axle	E0HT18045AA	O|O	83309	...		...	...
		E0HT18045AB	O|O	83309	...		...	...
		E0HT-18045-AA	O|O	83309	...		...	...
		E0HT-18045-AB	O|O	83309	...		...	...
83-87	Models with 9000 lb Axle with H.D. Suspension & 12000 lb Axle	D2HF18045AA	O|O	83314	...		...	...
		D2HF-18045-AA	O|O	83314	...		...	...
		D7HT18045CA	O|O	83314	...		...	...
		D7HT-18045-CA	O|O	83314	...		...	...
F SERIES - CONVENTIONAL CAB								
64-66	F-800, F-850-,F-900, F-950, F-1000 - Exc. Diesel with 11000 CP Axle	C1TT18045D	O|O	G63406	...		...	...
		C1TT-18045-D	O|O	G63406	...		...	...
64-66	F-1000 Models with 11000 lb. to 15000 lb. Axles	C1TT18045D	O|O	G63406	...		...	...
		C1TT-18045-D	O|O	G63406	...		...	...
64-69	F-500, F-600, F-700, F-750 with 6000 & 7000 Axle	C2TA18045A	O|O	83216	...		...	...
		C2TA-18045-A	O|O	83216	...		...	...
64-69	F-600, F-650, F-700, F-750, F-800 with 13000 & 15000 lb. Rear Axle	D7HT18080BA		...	...	O|O	83225	...
		D7HT-18080-BA		...	...	O|O	83225	...
64-69	F-800, F-850-,F-900, F-950, F-1000 with 6000, 7000, 9000, 11000, 12000, 15000, 18000 lb. Axles (Exc. Diesel with 6000 and 7000 lb. Axles)	C1TT18045C	O|O	83312	89409		...	...
		C1TT-18045-C	O|O	83312	89409		...	...
		C6PF18077DL	O|O	83312	89409		...	...
		C6PF-18077-DL	O|O	83312	89409		...	...
64-69	F-950, F-1000, F-1100 Diesel with 7000 lb. Axle	C6PF18077DN	O|O	83314	...		...	...

FORD (CONT'D)

F SERIES - CONVENTIONAL CAB (cont'd)

Year Ano Année	Model Modelo Modle	OEM #		Front Fleetline	Front GasSLX		Rear Fleetline	Rear GasSLX
64-69	F-950, F-1000, F-1100 Diesel with 7000 lb. Axle	C6PF-18077-DN	O|O	83314	...		...	...
67-69	F-500, F-600, F-650, F-700, F-750 with 5500, 6000, 7000 & 9000 lb. Axles	C8TA18045AA	–|O	G63386	...		...	...
		C8TA-18045-AA	–|O	G63386	...		...	...
70-72	F-700 (Diesel), F-750 with 9000 lb. Axle	D2HF18045CA	O|O	83308	...		...	...
		D2HF-18045-CA	O|O	83308	...		...	...
64-79	F-500, F-600 (2 x 4), F-650, F-700, F-750	C7PF18077A		...	...	O|O	83225	...
		C7PF-18077-A		...	...	O|O	83225	...
		D2TF18080HA		...	...	O|O	83225	...
		D2TF-18080-HA		...	...	O|O	83225	...
70-79	F-500, F-600, F-650, F-700, F-750, F-800 with 5500, 6000, 7000 & 9000 lb. Axles	D2TF18045GA	O|O	83308	...		...	...
		D2TF-18045-GA	O|O	83308	...		...	...
70-79	F-500, F-600, F-650, F-700, F-750 with 5500, 6000, 7000 & 9000 lb. Axles	D2HT18045GA	O|O	83308	...		...	...
		D2HT-18045-GA	O|O	83308	...		...	...
70-79	F-650, F-750, F-800 with 13000 & 15000 lb. Rear Axle	D7HT-18080-BA		...	...	O|O	83225	...
73-79	F-700 (Diesel), F-750, F-800 with 9000 lb. Axle	D2EF18045AA	O|O	83312	89409		...	...
		D2EF-18045-AA	O|O	83312	89409		...	...
		D2TF18045AA	O|O	83312	89409		...	...
		D2TF-18045-AA	O|O	83312	89409		...	...
		D7HT18045BA	O|O	83312	89409		...	...
		D7HT-18045-BA	O|O	83312	89409		...	...
76-79	F-800	D2HT18080HA		...	...	O|O	83225	...
		D2HT-18080-HA		...	...	O|O	83225	...
		D7HT18045GA	O|O	83308	...		...	...
		D7HT-18045-GA	O|O	83308	...		...	...
70-80	F-650, F-750, F-800 with 13000 & 15000 lb. Rear Axle	D7HT18080BA		...	...	O|O	83225	...
80-82	F-8000, FT-700, FT-8000 - Exc. 9000 lb. Axle with H.D. Suspension & 12000 lb. Axle	E0HT18045AA	O|O	83309	...		...	...
		E0HT18045AB	O|O	83309	...		...	...
		E0HT-18045-AA	O|O	83309	...		...	...
		E0HT-18045-AB	O|O	83309	...		...	...
83-87	FT-700 - Exc. 9000 lb. Axle with H.D. Suspension & 12000 lb. Axle	E0HT18045AA	O|O	83309	...		...	...
		E0HT18045AB	O|O	83309	...		...	...
		E0HT-18045-AA	O|O	83309	...		...	...
		E0HT-18045-AB	O|O	83309	...		...	...
80-89	F-650 with 13000 & 15000 lb. Rear Axle	D7HT-18080-BA		...	...	O|O	83225	...
81-89	F-650 with 13000 & 15000 lb. Rear Axle	D7HT18080BA		...	...	O|O	83225	...
88-89	F-8000, FT-700, FT-8000 - Exc. 9000 lb. Axle with H.D. Suspension & 12000 lb. Axle	E0HT18045AA	O|O	83309	...		...	...
		E0HT18045AB	O|O	83309	...		...	...
		E0HT-18045-AA	O|O	83309	...		...	...
		E0HT-18045-AB	O|O	83309	...		...	...
1990	F-650 with 13000 & 15000 lb Rear Axle	D7HT18080BA		...	...	O|O	83225	...
		D7HT-18080-BA		...	...	O|O	83225	...
1990	F-8000, FT-700, FT-8000 - Exc. 9000 lb Axle with H.D. Suspension & 12000 lb Axle	E0HT18045AA	O|O	83309	...		...	...
		E0HT18045AB	O|O	83309	...		...	...
		E0HT-18045-AA	O|O	83309	...		...	...
		E0HT-18045-AB	O|O	83309	...		...	...

FT800

83-89	Models with 9000 lb Axle with H.D. Suspension & 12000 lb Axle	D2HF18045AA	O|O	83314	...		...	...
		D2HF-18045-AA	O|O	83314	...		...	...
		D7HT18045CA	O|O	83314	...		...	...
		D7HT-18045-CA	O|O	83314	...		...	...

APPLICATION GUIDE - TRUCKS, TRAILERS AND BUSES

Year Ano Année	Model Modelo Modle	OEM #		Front			Rear	
				Fleetline	GasSLX		Fleetline	GasSLX
FORD (CONT'D)								
FT800 (cont'd)								
80-90	Exc. 9000 lb Axle with H.D. Suspension & 12000 lb Axle	E0HT18045AA	○|○	**83309**	...		...	...
		E0HT18045AB	○|○	**83309**	...		...	...
		E0HT-18045-AA	○|○	**83309**	...		...	...
		E0HT-18045-AB	○|○	**83309**	...		...	...
FT900								
90-94	Models with 9000 lb Axle with H.D. Suspension or 10000, 11000, or 12000 lb Axles	C4HZ18124E	○|○	**83309**	...		...	...
		C4HZ-18124-E	○|○	**83309**	...		...	...
		F1HT18045AA	○|○	**83309**	...		...	...
		F1HT-18045-AA	○|○	**83309**	...		...	...
		F1HZ18124A	○|○	**83309**	...		...	...
		F1HZ-18124-A	○|○	**83309**	...		...	...
94-97	Models with 52" or 54" Taperleaf Springs and with 10000 or 12000 lb Axle	F4HT18045DA	○|○	**85063**	...		...	...
		F4HT-18045-DA	○|○	**85063**	...		...	...
		F5HZ18124C	○|○	**85063**	...		...	...
		F5HZ-18124-C	○|○	**85063**	...		...	...
94-97	Models with Taperleaf Springs and with 6000, 7000, 8500 or 9000 lb Axles	F4HT18045AB	○|○	**83314**	...		...	...
		F4HT-18045-AB	○|○	**83314**	...		...	...
		F5HZ18124A	○|○	**83314**	...		...	...
		F5HZ-18124-A	○|○	**83314**	...		...	...
90-98	Models with shock located forward of rear axle	ASH24446		...	...	○|○	**83215**	...
		ASH-24446		...	...	○|○	**83215**	...
		AX310		...	...	○|○	**83215**	...
		AX-310		...	...	○|○	**83215**	...
		E6HT18080AA		...	...	○|○	**83215**	...
		E6HT-18080-AA		...	...	○|○	**83215**	...
		E6HZ18125D		...	...	○|○	**83215**	...
		E6HZ-18125-D		...	...	○|○	**83215**	...
94-98	Models with 46" Taperleaf Spring and 15000, 17500 or 19000 lb Axle	F4HT18080AA		...	...	○|○	**85314**	**89425**
		F4HT18080AB		...	...	○|○	**85314**	**89425**
		F4HT-18080-AA		...	...	○|○	**85314**	**89425**
		F4HT-18080-AB		...	...	○|○	**85314**	**89425**
		F5HZ18125DA		...	...	○|○	**85314**	**89425**
		F5HZ-18125-DA		...	...	○|○	**85314**	**89425**
94-98	Models with 46" Taperleaf Springs and 21000 lb Axle	F4HT18080BA		...	...	○|○	**85001**	**89410**
		F4HT-18080-BA		...	...	○|○	**85001**	**89410**
94-98	Models with Multileaf Spring and 14600 lb Axle	F4HT18045EA	○|○	**83125**	...		...	...
		F4HT-18045-EA	○|○	**83125**	...		...	...
		F5HZ18124D	○|○	**83125**	...		...	...
		F5HZ-18124-D	○|○	**83125**	...		...	...
94-98	w/ Multileaf Spring and w/ 10000, 12000 or 13200 lb Axle	F4HT18045CB	○|○	**83107**	...		...	...
		F4HT-18045-CB	○|○	**83107**	...		...	...
		F5HZ18124B	○|○	**83107**	...		...	...
		F5HZ-18124-B	○|○	**83107**	...		...	...
FT8000								
83-87	Exc. 9000 lb Axle with H.D. Suspension & 12000 lb Axle	E0HT18045AA	○|○	**83309**	...		...	...
		E0HT18045AB	○|○	**83309**	...		...	...
		E0HT-18045-AA	○|○	**83309**	...		...	...
		E0HT-18045-AB	○|○	**83309**	...		...	...
83-87	Models with 9000 lb Axle with H.D. Suspension & 12000 lb Axle	D2HF18045AA	○|○	**83314**	...		...	...
		D2HF-18045-AA	○|○	**83314**	...		...	...
		D7HT18045CA	○|○	**83314**	...		...	...

APPLICATION GUIDE - TRUCKS, TRAILERS AND BUSES

Year Ano Année	Model Modelo Modle	OEM #		Front			Rear	
				Fleetline	GasSLX		Fleetline	GasSLX
FORD (CONT'D)								
FT8000 (cont'd)								
83-87	Models with 9000 lb Axle with H.D. Suspension & 12000 lb Axle	D7HT-18045-CA	O|O	**83314**	...		...	...
FT-900								
90-92	(Low Profile Vehicle)	E9HS18080AA		...	...	O|O	**85716**	...
		E9HS-18080-AA		...	...	O|O	**85716**	...
90-94	(Low Profile Vehicle)	E9HZ18124A	O|O	**83309**	...		...	...
		E9HZ-18124-A	O|O	**83309**	...		...	...
90-94	FT-900LP with 9000 lb Axle with H.D. Suspension or 10000, 11000, or 12000 lb Axles	E9HS18045AA	O|O	**83309**	...		...	...
		E9HS-18045-AA	O|O	**83309**	...		...	...
H AND HT SERIES - HI TILT CAB								
61-63	HT-950 with 11000 lb. Axle	.....	O|O	**83314**	...		...	...
61-66	HT-950 with 12000 & 15000 lb. Axle	.....	O|O	**83314**	...		...	...
L800								
80-85	Models with 7000, 9000, 12000, 16000 lb Axles	D2HF18045AA	O|O	**83314**	...		...	...
		D2HF18045BA	O|O	**83309**	...		...	...
		D2HF-18045-AA	O|O	**83314**	...		...	...
		D2HF-18045-BA	O|O	**83309**	...		...	...
		D2HT18045CA	O|O	**83314**	...		...	...
		D2HT-18045-CA	O|O	**83314**	...		...	...
		D7HT18045DA	O|O	**83309**	...		...	...
		D7HT-18045-DA	O|O	**83309**	...		...	...
80-85	Models with 7000, 9000, 12000 lb Axles	D2EF18045AA	O|O	**83312**	**89409**		...	...
		D2EF-18045-AA	O|O	**83312**	**89409**		...	...
		D2KF18045AA	O|O	**83312**	**89409**		...	...
		D2KF-18045-AA	O|O	**83312**	**89409**		...	...
		D7HF18045FA	O|O	**83312**	**89409**		...	...
		D7HF-18045-FA	O|O	**83312**	**89409**		...	...
		D7HT18045BA	O|O	**83312**	**89409**		...	...
		D7HT-18045-BA	O|O	**83312**	**89409**		...	...
L900								
1981	Models with 7000, 9000, 12000, 16000 lb Axles	D2HF18045AA	O|O	**83314**	...		...	...
		D2HF18045BA	O|O	**83309**	...		...	...
		D2HF-18045-AA	O|O	**83314**	...		...	...
		D2HF-18045-BA	O|O	**83309**	...		...	...
		D2HT18045CA	O|O	**83314**	...		...	...
		D2HT-18045-CA	O|O	**83314**	...		...	...
		D7HT18045DA	O|O	**83309**	...		...	...
		D7HT-18045-DA	O|O	**83309**	...		...	...
1981	Models with 7000, 9000, 12000 lb Axles	D2EF18045AA	O|O	**83312**	**89409**		...	...
		D2EF-18045-AA	O|O	**83312**	**89409**		...	...
		D2KF18045AA	O|O	**83312**	**89409**		...	...
		D2KF-18045-AA	O|O	**83312**	**89409**		...	...
		D7HF18045FA	O|O	**83312**	**89409**		...	...
		D7HF-18045-FA	O|O	**83312**	**89409**		...	...
		D7HT18045BA	O|O	**83312**	**89409**		...	...
		D7HT-18045-BA	O|O	**83312**	**89409**		...	...
L8000								
81-85	Models with 7000, 9000, 12000, 16000 lb Axles	D2HF18045AA	O|O	**83314**	...		...	...

APPLICATION GUIDE - TRUCKS, TRAILERS AND BUSES

Year Ano Année	Model Modelo Modle	OEM #		Front			Rear	
				Fleetline	GasSLX		Fleetline	GasSLX
FORD (CONT'D)								
L8000 (cont'd)								
81-85	Models with 7000, 9000, 12000, 16000 lb Axles	D2HF-18045-AA	○|○	**83314**	...		...	...
		D2HT18045CA	○|○	**83314**	...		...	...
		D2HT-18045-CA	○|○	**83314**	...		...	...
81-88	Models with 7000, 9000, 12000, 16000 lb Axles	D2HF18045BA	○|○	**83309**	...		...	...
		D2HF-18045-BA	○|○	**83309**	...		...	...
		D7HT18045DA	○|○	**83309**	...		...	...
		D7HT-18045-DA	○|○	**83309**	...		...	...
81-88	Models with 7000, 9000, 12000 lb Axles	D2EF18045AA	○|○	**83312**	**89409**		...	...
		D2EF-18045-AA	○|○	**83312**	**89409**		...	...
		D2KF18045AA	○|○	**83312**	**89409**		...	...
		D2KF-18045-AA	○|○	**83312**	**89409**		...	...
		D7HF18045FA	○|○	**83312**	**89409**		...	...
		D7HF-18045-FA	○|○	**83312**	**89409**		...	...
		D7HT18045BA	○|○	**83312**	**89409**		...	...
		D7HT-18045-BA	○|○	**83312**	**89409**		...	...
L8000F								
90-97	Models with 52" Taperleaf Spring	F1HT18045GA	○|○	**85006**	...		...	...
		F1HT18045GB	○|○	**85006**	...		...	...
		F1HT-18045-GA	○|○	**85006**	...		...	...
		F1HT-18045-GB	○|○	**85006**	...		...	...
90-97	Models with 58" Parabolic Taperleaf Spring	F1HT18045RA	○|○	**89402**	...		...	...
		F1HT18045RB	○|○	**89402**	...		...	...
		F1HT-18045-RA	○|○	**89402**	...		...	...
		F1HT-18045-RB	○|○	**89402**	...		...	...
91-97	Models with 4000, 4500, 5400, 6000, 7200 lb Multileaf Springs and with 9000, 10000, 12000 or 16000 lb Axles	F1HT18045CB	○|○	**83216**	...		...	...
		F1HT-18045-CB	○|○	**83216**	...		...	...
91-97	Models with 4500, 5400, 6000, 7200, 10000 lb Multileaf Springs and with 10000, 12000, 13200, 16000 lb Axles	F1HT18045DB	○|○	**83308**	...		...	...
		F1HT-18045-DB	○|○	**83308**	...		...	...
91-97	Models with Multleaf Spring	F1HT18045DA	○|○	**83312**	**89409**		...	...
		F1HT-18045-DA	○|○	**83312**	**89409**		...	...
94-97	Models with 21000 or 23000 lb. with 46" Taperleaf Spring	F4HT18080BA		...	...	○|○	**85001**	**89410**
		F4HT-18080-BA		...	...	○|○	**85001**	**89410**
L9000								
81-85	Models with 7000, 9000, 12000, 16000 lb Axles	D2HF18045AA	○|○	**83314**	...		...	...
		D2HF-18045-AA	○|○	**83314**	...		...	...
		D2HT18045CA	○|○	**83314**	...		...	...
		D2HT-18045-CA	○|○	**83314**	...		...	...
81-90	Models with 7000, 9000, 12000, 16000 lb Axles	D2HF18045BA	○|○	**83309**	...		...	...
		D2HF-18045-BA	○|○	**83309**	...		...	...
		D7HT18045DA	○|○	**83309**	...		...	...
		D7HT-18045-DA	○|○	**83309**	...		...	...
81-97	Models with 7000, 9000, 12000 lb Axles	D2EF18045AA	○|○	**83312**	**89409**		...	...
		D2EF-18045-AA	○|○	**83312**	**89409**		...	...
		D2KF18045AA	○|○	**83312**	**89409**		...	...
		D2KF-18045-AA	○|○	**83312**	**89409**		...	...
		D7HF18045FA	○|○	**83312**	**89409**		...	...
		D7HF-18045-FA	○|○	**83312**	**89409**		...	...
		D7HT18045BA	○|○	**83312**	**89409**		...	...
		D7HT-18045-BA	○|○	**83312**	**89409**		...	...
91-97	Models with 52" Taperleaf Spring	F1HT18045GA	○|○	**85006**	...		...	...
		F1HT18045GB	○|○	**85006**	...		...	...

APPLICATION GUIDE - TRUCKS, TRAILERS AND BUSES

Year Ano Année	Model Modelo Modle	OEM #		Front			Rear	
				Fleetline	GasSLX		Fleetline	GasSLX
FORD (CONT'D)								
L9000 (cont'd)								
91-97	Models with 52" Taperleaf Spring	F1HT-18045-GA	O|O	**85006**	...		...	...
		F1HT-18045-GB	O|O	**85006**	...		...	...
91-97	Models with 58" Parabolic Taperleaf Spring	F1HT18045RA	O|O	**89402**	...		...	...
		F1HT18045RB	O|O	**89402**	...		...	...
		F1HT-18045-RA	O|O	**89402**	...		...	...
		F1HT-18045-RB	O|O	**89402**	...		...	...
91-97	Models with 4000, 4500, 5400, 6000, 7200 lb Multileaf Springs and with 9000, 10000, 12000 or 16000 lb Axles	F1HT18045CB	O|O	**83216**	...		...	...
		F1HT-18045-CB	O|O	**83216**	...		...	...
91-97	Models with 4500, 5400, 6000, 7200, 10000 lb Multileaf Springs and with 10000, 12000, 13200, 16000 lb Axles	F1HT18045DB	O|O	**83308**	...		...	...
		F1HT-18045-DB	O|O	**83308**	...		...	...
91-97	Models with Multleaf Spring	F1HT18045DA	O|O	**83312**	**89409**		...	...
		F1HT-18045-DA	O|O	**83312**	**89409**		...	...
94-97	Models with 21000 or 23000 lb. with 46" Taperleaf Spring	F4HT18080BA		...	...	O|O	**85001**	**89410**
		F4HT-18080-BA		...	...	O|O	**85001**	**89410**
L, LT & LTS - CONVENTIONAL CAB								
73-79	L-800, L8000, L-900,L-9000, LT-800, LT-880, LT8000, LT-900, LT-9000, LTS-8000, LTS-900, LTS-9000 with 7000, 9000, 12000, 16000 lb. Axles	D2HF18045AA	O|O	**83314**	...		...	...
		D2HF-18045-AA	O|O	**83314**	...		...	...
		D2HT18045CA	O|O	**83314**	...		...	...
		D2HT-18045-CA	O|O	**83314**	...		...	...
73-79	L-800, L8000, L-900, L-9000, LT-800, LT-880, LT8000, LT-900, LT-9000 with 7000, 9000, 12000 lb. Axles	D2EF18045AA	O|O	**83312**	**89409**		...	...
		D2EF-18045-AA	O|O	**83312**	**89409**		...	...
		D2KF18045AA	O|O	**83312**	**89409**		...	...
		D2KF-18045-AA	O|O	**83312**	**89409**		...	...
		D7HF18045FA	O|O	**83312**	**89409**		...	...
		D7HF-18045-FA	O|O	**83312**	**89409**		...	...
		D7HT18045BA	O|O	**83312**	**89409**		...	...
		D7HT-18045-BA	O|O	**83312**	**89409**		...	...
73-80	L-800, L850, L-900,L-9000, LT-800, LT-850, LT880, LT-900, LT-9000, LTS-800, LTS-850, LTS-900 with 7000, 9000, 12000, 16000 lb. Axles	D2HF18045BA	O|O	**83309**	...		...	...
		D2HF-18045-BA	O|O	**83309**	...		...	...
		D7HT18045DA	O|O	**83309**	...		...	...
		D7HT-18045-DA	O|O	**83309**	...		...	...
73-89	LTS-800, LTS-850, LTS-900, LTS-9000 with 16000 lb. Axle	D0HA18045E	O|O	**83312**	**89409**		...	...
		D0HA-18045-E	O|O	**83312**	**89409**		...	...
		D2HF18045DA	O|O	**83312**	**89409**		...	...
		D2HF-18045-DA	O|O	**83312**	**89409**		...	...
		D7HT18045EA	O|O	**83312**	**89409**		...	...
		D7HT-18045-EA	O|O	**83312**	**89409**		...	...
	L-8000, L-9000, LT-8000, LT-9000 with Hendrickson Rear Air Suspension	47902-13		...	...	O|O	**83122**	**89406**
		4790213		...	...	O|O	**83122**	**89406**
LA8000F								
91-97	All with Hendrickson HAS-400, HA-210 or HA-230 Air Suspension	47902-28		...	...	O|O	**85013**	**89414**
		4790228		...	...	O|O	**85013**	**89414**
91-97	Models with 52" or 58" Taperleaf Spring	F1HT18045EA	O|O	**89402**	...		...	...
		F1HT18045EB	O|O	**89402**	...		...	...
		F1HT-18045-EA	O|O	**89402**	...		...	...
		F1HT-18045-EB	O|O	**89402**	...		...	...
91-97	Models with 4000, 4500, 5400, 6000, or 7200 lb. Multileaf Spring	F1HT18045CB	O|O	**83216**	...		...	...
		F1HT-18045-CB	O|O	**83216**	...		...	...
91-97	Models with with 4500 lb to 10000 lb Multileaf Spring	F1HT18045CA	O|O	**83308**	...		...	...

APPLICATION GUIDE - TRUCKS, TRAILERS AND BUSES

Year Ano Année	Model Modelo Modle	OEM #		Front			Rear	
				Fleetline	GasSLX		Fleetline	GasSLX
FORD (CONT'D)								
LA8000F (cont'd)								
91-97	Models with with 4500 lb to 10000 lb Multileaf Spring	F1HT-18045-CA	○|○	**83308**	...		...	...
1996	Models with 12000 or 13000 lb Axles	F6HT18045LA	○|○	**85376**	...		...	...
		F6HT-18045-LA	○|○	**85376**	...		...	...
1996	Models with 16000 lb. Multileaf Spring	F6HT18045AA	○|○	**85054**	...		...	...
		F6HT-18045-AA	○|○	**85054**	...		...	...
LA9000								
90-97	Models with with 4500 lb to 10000 lb Multileaf Spring	F1HT18045CA	○|○	**83308**	...		...	...
		F1HT-18045-CA	○|○	**83308**	...		...	...
91-97	All with Hendrickson HAS-400, HA-210 or HA-230 Air Suspension	47902-28		...	...	○|○	**85013**	**89414**
		4790228		...	...	○|○	**85013**	**89414**
91-97	Models with 4000, 4500, 5400, 6000, or 7200 lb. Multileaf Spring	F1HT18045CB	○|○	**83216**	...		...	...
		F1HT-18045-CB	○|○	**83216**	...		...	...
LL9000								
90-92	Models with 4500, 5000, 6000 lb Springs and with 10000, 11000, 12000 lb Axles	F1HT18045DB	○|○	**83308**	...		...	...
		F1HT-18045-DB	○|○	**83308**	...		...	...
91-92	Models with 4000, 4500, 5400, 6000 or 7200 lb Multileaf Springs and with 9000, 10000, 12000 or 16000 lb Axles	F1HT18045CB	○|○	**83216**	...		...	...
		F1HT-18045-CB	○|○	**83216**	...		...	...
94-96	Models with 4000, 4500, 5400, 6000 or 7200 lb Multileaf Springs and with 9000, 10000, 12000 or 16000 lb Axles	F1HT18045CB	○|○	**83216**	...		...	...
		F1HT-18045-CB	○|○	**83216**	...		...	...
94-96	Models with 4500, 5000, 6000 lb Springs and with 10000, 11000, 12000 lb Axles	F1HT18045DB	○|○	**83308**	...		...	...
		F1HT-18045-DB	○|○	**83308**	...		...	...
LL, LLA, LTA, LTL, LTLA - CONVENTIONAL CAB								
80-85	LTL-900, LTL-9000 with 7000, 9000, 12000 lb. Axle	D2HF18045AA	○|○	**83314**	...		...	...
		D2HF-18045-AA	○|○	**83314**	...		...	...
1991	LLA-9000, LTLA-9000 with 4500, 5400, 6500 lb 58" Parabolic Taperleaf Spring	F0HT18045CA	○|○	**85006**	...		...	...
		F0HT-18045-CA	○|○	**85006**	...		...	...
		F1HT18045HB	○|○	**85006**	...		...	...
		F1HT-18045-HB	○|○	**85006**	...		...	...
1991	LTA-9000, LLA-9000 or LTLA-9000 Models	47902-28		...	...	○|○	**85013**	**89414**
		4790228		...	...	○|○	**85013**	**89414**
		F1HT18045CA	○|○	**83308**	...		...	...
		F1HT-18045-CA	○|○	**83308**	...		...	...
1993	LL-9000 with 4500, 5000, 6000 lb Springs and with 10000, 11000, 12000 lb Axles	F1HT18045DB	○|○	**83308**	...		...	...
		F1HT-18045-DB	○|○	**83308**	...		...	...
LLA9000								
92-97	Models with 4000, 4500, 5400, 6000 or 7200 lb Multileaf Springs and with 9000, 10000, 12000 or 16000 lb Axles	F1HT18045CB	○|○	**83216**	...		...	...
		F1HT-18045-CB	○|○	**83216**	...		...	...
92-97	Models with 4500, 5400, 6500 lb 58" Parabolic Taperleaf Spring	F0HT18045CA	○|○	**85006**	...		...	...
		F0HT-18045-CA	○|○	**85006**	...		...	...
		F1HT18045HB	○|○	**85006**	...		...	...
		F1HT-18045-HB	○|○	**85006**	...		...	...
92-97	Models With 4500, 5400, 6000, 7200 or 10000 lb. Multileaf Spring	F1HT18045CA	○|○	**83308**	...		...	...
		F1HT-18045-CA	○|○	**83308**	...		...	...
92-97	Models with Hendrickson Rear Air Suspension	47902-28		...	...	○|○	**85013**	**89414**
		4790228		...	...	○|○	**85013**	**89414**
LN600								
80-85	Models with 3000, 3300 lb Springs and 5000, 5500, 6000, 7000 lb Axles	D7HT18045GA	○|○	**83308**	...		...	...

APPLICATION GUIDE - TRUCKS, TRAILERS AND BUSES

Year Ano Année	Model Modelo Modle	OEM #		Front			Rear	
				Fleetline	GasSLX		Fleetline	GasSLX
FORD (CONT'D)								
LN600 (cont'd)								
80-85	Models with 3000, 3300 lb Springs and 5000, 5500, 6000, 7000 lb Axles	D7HT-18045-GA	O|O	83308	...		...	...
80-85	Models with 4400 lb Spring and 7000, 9000 lb Axles	D2EF18045AA	O|O	83312	89409		...	...
		D2EF-18045-AA	O|O	83312	89409		...	...
80-85	Models with 11000, 13000, 15000, 17000 lb Axles	D7HT18080BA		...	...	O|O	83225	...
		D7HT-18080-BA		...	...	O|O	83225	...
LN700								
80-86	Models with 3000, 3300 lb Springs and 5000, 5500, 6000, 7000 lb Axles	D7HT18045GA	O|O	83308	...		...	...
		D7HT-18045-GA	O|O	83308	...		...	...
80-86	Models with 4400 lb Spring and 7000, 9000 lb Axles	D2EF18045AA	O|O	83312	89409		...	...
		D2EF-18045-AA	O|O	83312	89409		...	...
80-86	Models with 11000, 13000, 15000, 17000 lb Axles	D7HT18080BA		...	...	O|O	83225	...
		D7HT-18080-BA		...	...	O|O	83225	...
LN800								
80-85	Models with 3000, 3300 lb Springs and 5000, 5500, 6000, 7000 lb Axles	D7HT18045GA	O|O	83308	...		...	...
		D7HT-18045-GA	O|O	83308	...		...	...
80-85	Models with 4400 lb Spring and 7000, 9000 lb Axles	D2EF18045AA	O|O	83312	89409		...	...
		D2EF-18045-AA	O|O	83312	89409		...	...
80-85	Models with 6000, 7000, 9000, 12000, 16000 lb Axles	D2HF18045BA	O|O	83309	...		...	...
		D2HF-18045-BA	O|O	83309	...		...	...
		D7HT18045DA	O|O	83309	...		...	...
		D7HT-18045-DA	O|O	83309	...		...	...
LN900								
1981	Models with 6000, 7000, 9000, 12000, 16000 lb Axles	D2HF18045BA	O|O	83309	...		...	...
		D2HF-18045-BA	O|O	83309	...		...	...
		D7HT18045DA	O|O	83309	...		...	...
		D7HT-18045-DA	O|O	83309	...		...	...
LN7000								
81-97	Models with 3000, 3300 lb Springs and 5000, 5500, 6000, 7000 lb Axles	D7HT18045GA	O|O	83308	...		...	...
		D7HT-18045-GA	O|O	83308	...		...	...
81-97	Models with 4400 lb Spring and 7000, 9000 lb Axles	D2EF18045AA	O|O	83312	89409		...	...
		D2EF-18045-AA	O|O	83312	89409		...	...
90-97	Models with 52" Taperleaf Spring	F1HT18045GA	O|O	85006	...		...	...
		F1HT18045GB	O|O	85006	...		...	...
		F1HT-18045-GA	O|O	85006	...		...	...
		F1HT-18045-GB	O|O	85006	...		...	...
90-97	Models with 58" Parabolic Taperleaf Spring	F1HT18045RA	O|O	89402	...		...	...
		F1HT18045RB	O|O	89402	...		...	...
		F1HT-18045-RA	O|O	89402	...		...	...
		F1HT-18045-RB	O|O	89402	...		...	...
90-97	Models with Multileaf Spring	F1HT18045DA	O|O	83312	89409		...	...
		F1HT-18045-DA	O|O	83312	89409		...	...
91-97	Models with 4000, 4500, 5400, 6000 or 7200 lb Multileaf Springs and with 9000, 10000, 12000 or 16000 lb Axles	F1HT18045CB	O|O	83216	...		...	...
		F1HT-18045-CB	O|O	83216	...		...	...
91-97	Models with 4500, 5400, 6000, 7200, 10000 lb Springs and with 10000, 12000, 13200, 16000 lb Axles	F1HT18045DB	O|O	83308	...		...	...
		F1HT-18045-DB	O|O	83308	...		...	...
94-97	Models with 21000 or 23000 lb. with 46" Taperleaf Spring	F4HT18080BA		...	...	O|O	85001	89410
		F4HT-18080-BA		...	...	O|O	85001	89410
LN8000								
81-88	Models with 6000, 7000, 9000, 12000, 16000 lb Axles	D2HF18045BA	O|O	83309	...		...	...

APPLICATION GUIDE - TRUCKS, TRAILERS AND BUSES

Year Ano Année	Model Modelo Modle	OEM #		Front			Rear	
				Fleetline	GasSLX		Fleetline	GasSLX
FORD (CONT'D)								
LN8000 (cont'd)								
81-88	Models with 6000, 7000, 9000, 12000, 16000 lb Axles	D2HF-18045-BA	○|○	**83309**	...		...	...
		D7HT18045DA	○|○	**83309**	...		...	...
		D7HT-18045-DA	○|○	**83309**	...		...	...
81-97	Models with 3000, 3300 lb Springs and 5000, 5500, 6000, 7000 lb Axles	D7HT18045GA	○|○	**83308**	...		...	...
		D7HT-18045-GA	○|○	**83308**	...		...	...
81-97	Models with 4400 lb Spring and 7000, 9000 lb Axles	D2EF18045AA	○|○	**83312**	**89409**		...	...
		D2EF-18045-AA	○|○	**83312**	**89409**		...	...
90-97	Models with 52" Taperleaf Spring	F1HT18045GA	○|○	**85006**	...		...	...
		F1HT18045GB	○|○	**85006**	...		...	...
		F1HT-18045-GA	○|○	**85006**	...		...	...
		F1HT-18045-GB	○|○	**85006**	...		...	...
90-97	Models with 58" Parabolic Taperleaf Spring	F1HT18045RA	○|○	**89402**	...		...	...
		F1HT18045RB	○|○	**89402**	...		...	...
		F1HT-18045-RA	○|○	**89402**	...		...	...
		F1HT-18045-RB	○|○	**89402**	...		...	...
90-97	Models with Multileaf Spring	F1HT18045DA	○|○	**83312**	**89409**		...	...
		F1HT-18045-DA	○|○	**83312**	**89409**		...	...
91-97	Models with 4000, 4500, 5400, 6000 or 7200 lb Multileaf Springs and with 9000, 10000, 12000 or 16000 lb Axles	F1HT18045CB	○|○	**83216**	...		...	...
		F1HT-18045-CB	○|○	**83216**	...		...	...
91-97	Models with 4500, 5400, 6000, 7200, 10000 lb Springs and with 10000, 12000, 13200, 16000 lb Axles	F1HT18045DB	○|○	**83308**	...		...	...
		F1HT-18045-DB	○|○	**83308**	...		...	...
94-97	Models with 21000 or 23000 lb. with 46" Taperleaf Spring	F4HT18080BA		...	...	○|○	**85001**	**89410**
		F4HT-18080-BA		...	...	○|○	**85001**	**89410**
LN9000								
81-89	Models with 6000, 7000, 9000, 12000, 16000 lb Axles	D2HF18045BA	○|○	**83309**	...		...	...
		D2HF-18045-BA	○|○	**83309**	...		...	...
		D7HT18045DA	○|○	**83309**	...		...	...
		D7HT-18045-DA	○|○	**83309**	...		...	...
90-97	Models with 52" Taperleaf Spring	F1HT18045GA	○|○	**85006**	...		...	...
		F1HT18045GB	○|○	**85006**	...		...	...
		F1HT-18045-GA	○|○	**85006**	...		...	...
		F1HT-18045-GB	○|○	**85006**	...		...	...
90-97	Models with 58" Parabolic Taperleaf Spring	F1HT18045RA	○|○	**89402**	...		...	...
		F1HT18045RB	○|○	**89402**	...		...	...
		F1HT-18045-RA	○|○	**89402**	...		...	...
		F1HT-18045-RB	○|○	**89402**	...		...	...
90-97	Models with Multileaf Spring	F1HT18045DA	○|○	**83312**	**89409**		...	...
		F1HT-18045-DA	○|○	**83312**	**89409**		...	...
91-97	Models with 4000, 4500, 5400, 6000 or 7200 lb Multileaf Springs and with 9000, 10000, 12000 or 16000 lb Axles	F1HT18045CB	○|○	**83216**	...		...	...
		F1HT-18045-CB	○|○	**83216**	...		...	...
91-97	Models with 4500, 5400, 6000, 7200, 10000 lb Springs and with 10000, 12000, 13200, 16000 lb Axles	F1HT18045DB	○|○	**83308**	...		...	...
		F1HT-18045-DB	○|○	**83308**	...		...	...
94-97	Models with 21000 or 23000 lb. with 46" Taperleaf Spring	F4HT18080BA		...	...	○|○	**85001**	**89410**
		F4HT-18080-BA		...	...	○|○	**85001**	**89410**
LN & LNT - CONVENTIONAL CAB								
70-71	LN-800, LN-850, LNT-900, with 7000, 9000, 12000 lb. Axles	D2TF18045GA	○|○	**83308**	...		...	...
		D2TF-18045-GA	○|○	**83308**	...		...	...
70-75	LN-700, LN-750 Diesel with 9000 lb. Axle	C1TT18045C	○|○	**83312**	**89409**		...	...
		C1TT-18045-C	○|○	**83312**	**89409**		...	...

APPLICATION GUIDE - TRUCKS, TRAILERS AND BUSES

Year Ano Année	Model Modelo Modle	OEM #		Front			Rear	
				Fleetline	GasSLX		Fleetline	GasSLX
FORD (CONT'D)								
LN & LNT - CONVENTIONAL CAB (cont'd)								
76-77	LN-800, LN-8000, LN-900, LN-9000, LNT-800, LNT-8000, LNT-900, LNT-9000	D2KF18045AA	O|O	83312	89409		...	...
		D2KF-18045-AA	O|O	83312	89409		...	...
70-79	LN-800, LN-850, LN-8000, LN-900, LN-9000, LNT-800, LNT-850, LNT-880, LNT-8000, LNT-900, LNT-9000 with 6000, 7000, 9000, 12000, 16000 lb. Axles	D2HF18045BA	O|O	83309	...		...	...
		D2HF-18045-BA	O|O	83309	...		...	...
		D7HT18045DA	O|O	83309	...		...	...
		D7HT-18045-DA	O|O	83309	...		...	...
76-79	LN-600, LN-650, LN-700, LN-800	D7HT18045BA	O|O	83312	89409		...	...
		D7HT-18045-BA	O|O	83312	89409		...	...
76-81	LN-800, LN-8000, LN-900, LN-9000, LNT-800, LNT-8000, LNT-900, LNT-9000	D2HF18045AA	O|O	83314	...		...	...
		D2HF-18045-AA	O|O	83314	...		...	...
		D7HT18045CA	O|O	83314	...		...	...
		D7HT-18045-CA	O|O	83314	...		...	...
70-89	LN-600, LN-650, LN-700, LN-750, LN-7000, LN-800, LN-8000, LNT-800, LNT-8000 with 3000, 3300 lb. Springs and 5000, 5500, 6000, 7000 lb. Axles	D7HT18045GA	O|O	83308	...		...	...
		D7HT-18045-GA	O|O	83308	...		...	...
70-89	LN-600, LN-700, LN-7000, LN-800, LN-8000, LNT-800, LNT-8000 with 4400 lb. Spring and 7000, 9000 lb. Axles	D2EF18045AA	O|O	83312	89409		...	...
		D2EF-18045-AA	O|O	83312	89409		...	...
86-89	LN-600, LN-700, LN-750 with 11000, 13000, 15000, 17000 lb. Axles	D7HT18080BA		...	...	O|O	83225	...
		D7HT-18080-BA		...	...	O|O	83225	...
	LN-7000, LN-8000, LN-9000, LNT-8000, LNT-9000 with Hendrickson Rear Air Suspension	47902-13		...	...	O|O	83122	89406
		4790213		...	...	O|O	83122	89406
		F0HT18080AA		...	...	O|O	83122	89406
		F0HT-18080-AA		...	...	O|O	83122	89406
		F0HZ18125A		...	...	O|O	83122	89406
		F0HZ-18125-A		...	...	O|O	83122	89406
LNT800								
81-84	Models with 3000, 3300 lb Springs and 5000, 5500, 6000, 7000 lb Axles	D7HT18045GA	O|O	83308	...		...	...
		D7HT-18045-GA	O|O	83308	...		...	...
81-84	Models with 4400 lb Spring and 7000, 9000 lb Axles	D2EF18045AA	O|O	83312	89409		...	...
		D2EF-18045-AA	O|O	83312	89409		...	...
81-84	Models with 6000, 7000, 9000, 12000, 16000 lb Axles	D2HF18045BA	O|O	83309	...		...	...
		D2HF-18045-BA	O|O	83309	...		...	...
		D7HT18045DA	O|O	83309	...		...	...
		D7HT-18045-DA	O|O	83309	...		...	...
LNT900								
1981	Models with 6000, 7000, 9000, 12000, 16000 lb Axles	D2HF18045BA	O|O	83309	...		...	...
		D2HF-18045-BA	O|O	83309	...		...	...
		D7HT18045DA	O|O	83309	...		...	...
		D7HT-18045-DA	O|O	83309	...		...	...
LNT8000								
81-89	Models with 3000, 3300 lb Springs and 5000, 5500, 6000, 7000 lb Axles	D7HT18045GA	O|O	83308	...		...	...
		D7HT-18045-GA	O|O	83308	...		...	...
81-89	Models with 4400 lb Spring and 7000, 9000 lb Axles	D2EF18045AA	O|O	83312	89409		...	...
		D2EF-18045-AA	O|O	83312	89409		...	...
81-89	Models with 6000, 7000, 9000, 12000, 16000 lb Axles	D2HF18045BA	O|O	83309	...		...	...
		D2HF-18045-BA	O|O	83309	...		...	...
		D7HT18045DA	O|O	83309	...		...	...
		D7HT-18045-DA	O|O	83309	...		...	...

APPLICATION GUIDE - TRUCKS, TRAILERS AND BUSES

Year Ano Année	Model Modelo Modle	OEM #		Front			Rear	
				Fleetline	GasSLX		Fleetline	GasSLX
FORD (CONT'D)								
LNT8000F								
87-97	Models with 3000, 3300 lb Springs and 5000, 5500, 6000, 7000 lb Axles	D7HT18045GA	O|O	**83308**	...		...	...
		D7HT-18045-GA	O|O	**83308**	...		...	...
90-97	Models with 52" Taperleaf Spring	F1HT18045GA	O|O	**85006**	...		...	...
		F1HT18045GB	O|O	**85006**	...		...	...
		F1HT-18045-GA	O|O	**85006**	...		...	...
		F1HT-18045-GB	O|O	**85006**	...		...	...
90-97	Models with 58" Parabolic Taperleaf Spring	F1HT18045RA	O|O	**89402**	...		...	...
		F1HT18045RB	O|O	**89402**	...		...	...
		F1HT-18045-RA	O|O	**89402**	...		...	...
		F1HT-18045-RB	O|O	**89402**	...		...	...
90-97	Models with Multileaf Spring	F1HT18045DA	O|O	**83312**	**89409**		...	...
		F1HT-18045-DA	O|O	**83312**	**89409**		...	...
91-97	Models with 4000, 4500, 5400, 6000 or 7200 lb Multileaf Springs and with 9000, 10000, 12000 or 16000 lb Axles	F1HT18045CB	O|O	**83216**	...		...	...
		F1HT-18045-CB	O|O	**83216**	...		...	...
91-97	Models with 4500, 5400, 6000, 7200, 10000 lb Springs and with 10000, 12000, 13200, 16000 lb Axles	F1HT18045DB	O|O	**83308**	...		...	...
		F1HT-18045-DB	O|O	**83308**	...		...	...
94-97	Models with 21000 or 23000 lb. with 46" Taperleaf Spring	F4HT18080BA		...	...	O|O	**85001**	**89410**
		F4HT-18080-BA		...	...	O|O	**85001**	**89410**
LNT9000								
81-89	Models with 6000, 7000, 9000, 12000, 16000 lb Axles	D2HF18045BA	O|O	**83309**	...		...	...
		D2HF-18045-BA	O|O	**83309**	...		...	...
		D7HT18045DA	O|O	**83309**	...		...	...
		D7HT-18045-DA	O|O	**83309**	...		...	...
90-97	Models with 52" Taperleaf Spring	F1HT18045GA	O|O	**85006**	...		...	...
		F1HT18045GB	O|O	**85006**	...		...	...
		F1HT-18045-GA	O|O	**85006**	...		...	...
		F1HT-18045-GB	O|O	**85006**	...		...	...
90-97	Models with 58" Parabolic Taperleaf Spring	F1HT18045RA	O|O	**89402**	...		...	...
		F1HT18045RB	O|O	**89402**	...		...	...
		F1HT-18045-RA	O|O	**89402**	...		...	...
		F1HT-18045-RB	O|O	**89402**	...		...	...
90-97	Models with Multileaf Spring	F1HT18045DA	O|O	**83312**	**89409**		...	...
		F1HT-18045-DA	O|O	**83312**	**89409**		...	...
91-97	Models with 4000, 4500, 5400, 6000 or 7200 lb Multileaf Springs and with 9000, 10000, 12000 or 16000 lb Axles	F1HT18045CB	O|O	**83216**	...		...	...
		F1HT-18045-CB	O|O	**83216**	...		...	...
91-97	Models with 4500, 5400, 6000, 7200, 10000 lb Springs and with 10000, 12000, 13200, 16000 lb Axles	F1HT18045DB	O|O	**83308**	...		...	...
		F1HT-18045-DB	O|O	**83308**	...		...	...
94-97	Models with 21000 or 23000 lb. with 46" Taperleaf Spring	F4HT18080BA		...	...	O|O	**85001**	**89410**
		F4HT-18080-BA		...	...	O|O	**85001**	**89410**
LOUISVILLE SERIES - CONVENTIONAL CAB								
96-97	All Models with 10000 lb or 12000 lb Axle and 54" Taperleaf Spring	F6HT18045AC	O|O	**85054**	...		...	...
		F6HT-18045-AC	O|O	**85054**	...		...	...
		F6HZ18124A	O|O	**85054**	...		...	...
		F6HZ18124G	O|O	**85054**	...		...	...
		F6HZ-18124-A	O|O	**85054**	...		...	...
		F6HZ-18124-G	O|O	**85054**	...		...	...
96-97	All with 54" Multileaf Spring and with 8500 or 9000 lb Axle	F6HT18045JB	O|O	**89402**	...		...	...
		F6HT18045JC	O|O	**89402**	...		...	...
		F6HT-18045-JB	O|O	**89402**	...		...	...

APPLICATION GUIDE - TRUCKS, TRAILERS AND BUSES

Year Ano Année	Model Modelo Modle	OEM #		Front			Rear	
				Fleetline	GasSLX		Fleetline	GasSLX

FORD (CONT'D)

LOUISVILLE SERIES - CONVENTIONAL CAB (cont'd)

96-97	All with 54" Multileaf Spring and with 8500 or 9000 lb Axle	F6HT-18045-JC	O|O	**89402**	...		...	...
		F6HZ18124J	O|O	**89402**	...		...	...
		F6HZ-18124-J	O|O	**89402**	...		...	...
96-97	All with 8500 lb or 9000 lb Axle with 54" Taperleaf Spring	F6HT18045HB	O|O	**85054**	...		...	...
		F6HT18045HC	O|O	**85054**	...		...	...
		F6HT-18045-HB	O|O	**85054**	...		...	...
		F6HT-18045-HC	O|O	**85054**	...		...	...
		F6HZ18124H	O|O	**85054**	...		...	...
		F6HZ-18124-H	O|O	**85054**	...		...	...
96-97	All with 12000 lb, 13000 lb or 14600 lb Axle and 60" Taperleaf Spring	F6HT18045EB	O|O	**85055**	**89439**		...	...
		F6HT18045EC	O|O	**85055**	**89439**		...	...
		F6HT-18045-EB	O|O	**85055**	**89439**		...	...
		F6HT-18045-EC	O|O	**85055**	**89439**		...	...
		F6HZ18124D	O|O	**85055**	**89439**		...	...
		F6HZ18124E	O|O	**85055**	**89439**		...	...
		F6HZ18124F	O|O	**85055**	**89439**		...	...
		F6HZ-18124-D	O|O	**85055**	**89439**		...	...
		F6HZ-18124-E	O|O	**85055**	**89439**		...	...
		F6HZ-18124-F	O|O	**85055**	**89439**		...	...
96-98	All with 54" Multi-leaf Spring and 14600 or 16000 lb Axle	F6HT18045CC	O|O	**85055**	**89439**		...	...
		F6HT-18045-CC	O|O	**85055**	**89439**		...	...
		F6HZ18124C	O|O	**85055**	**89439**		...	...
		F6HZ-18124-C	O|O	**85055**	**89439**		...	...
96-98	All with 13200 lb or 14600 lb Axle and 54" Taperleaf Spring	F6HT18045GB	O|O	**85030**	**89440**		...	...
		F6HT18045GC	O|O	**85030**	**89440**		...	...
		F6HT-18045-GB	O|O	**85030**	**89440**		...	...
		F6HT-18045-GC	O|O	**85030**	**89440**		...	...
	All with 54" Multileaf Spring and with 12000 or 13200 lb Axle	F6HT18045BC	O|O	**85047**	**89435**		...	...
		F6HT-18045-BC	O|O	**85047**	**89435**		...	...
	All with Hendrickson HAS-400 Air Suspension	47902-28		...	...	O|O	**85013**	**89414**
		4790228		...	...	O|O	**85013**	**89414**
		F6HZ18080FC		...	...	O|O	**85013**	**89414**
		F6HZ18125D		...	...	O|O	**85013**	**89414**
		F6HZ-18080-FC		...	...	O|O	**85013**	**89414**
		F6HZ-18125-D		...	...	O|O	**85013**	**89414**
	All with Neway AD-246 Air Suspension	90045099		...	...	O|O	**85906**	**89407**
		90045132		...	...	O|O	**85909**	...

LS8000F

90-97	Models with 52" or 58" Taperleaf Spring	F1HT18045EA	O|O	**89402**	...		...	...
		F1HT18045EB	O|O	**89402**	...		...	...
		F1HT-18045-EA	O|O	**89402**	...		...	...
		F1HT-18045-EB	O|O	**89402**	...		...	...
90-97	Models with with 4500 lb to 10000 lb Multileaf Spring	F1HT18045CA	O|O	**83308**	...		...	...
		F1HT-18045-CA	O|O	**83308**	...		...	...

L-SERIES CONVENTIONAL

	All with 60" Able Body Sleepers with Link Bunkmate Models FAS60-A & FAS60-AS	1201-1044	O|O	**83025**
		1202-1044	O|O	**83025**
		12011044	O|O	**83025**
		12021044	O|O	**83025**
	L, LT, LN, LNT 800, 8000, 9000 Models, LTS, LS 8000, 9000 Models, & LTL, LL 9000 Models with Link Cabmate Model FN89-A	1201-0012	O|O	**83023**

FORD (CONT'D)

L-SERIES CONVENTIONAL (cont'd)

Year Ano Année	Model Modelo Modle	OEM #		Front			Rear	
				Fleetline	GasSLX		Fleetline	GasSLX
	L, LT, LN, LNT 800, 8000, 9000 Models, LTS, LS 8000, 9000 Models, & LTL, LL 9000 Models with Link Cabmate Model FN89-A	1202-0012	○|○	83023				
		12010012	○|○	83023				
		12020012	○|○	83023				

LT800

81-84	Models with 7000, 9000, 12000, 16000 lb Axles	D2HF18045AA	○|○	83314	...		...	...
		D2HF18045BA	○|○	83309	...		...	...
		D2HF-18045-AA	○|○	83314	...		...	...
		D2HF-18045-BA	○|○	83309	...		...	...
		D2HT18045CA	○|○	83314	...		...	...
		D2HT-18045-CA	○|○	83314	...		...	...
		D7HT18045DA	○|○	83309	...		...	...
		D7HT-18045-DA	○|○	83309	...		...	...
81-84	Models with 7000, 9000, 12000 lb Axles	D2EF18045AA	○|○	83312	89409		...	...
		D2EF-18045-AA	○|○	83312	89409		...	...
		D2KF18045AA	○|○	83312	89409		...	...
		D2KF-18045-AA	○|○	83312	89409		...	...
		D7HF18045FA	○|○	83312	89409		...	...
		D7HF-18045-FA	○|○	83312	89409		...	...
		D7HT18045BA	○|○	83312	89409		...	...
		D7HT-18045-BA	○|○	83312	89409		...	...

LT8000

81-85	Models with 7000, 9000, 12000, 16000 lb Axles	D2HF18045AA	○|○	83314	...		...	...
		D2HF-18045-AA	○|○	83314	...		...	...
		D2HT18045CA	○|○	83314	...		...	...
		D2HT-18045-CA	○|○	83314	...		...	...
81-88	Models with 7000, 9000, 12000, 16000 lb Axles	D2HF18045BA	○|○	83309	...		...	...
		D2HF-18045-BA	○|○	83309	...		...	...
		D7HT18045DA	○|○	83309	...		...	...
		D7HT-18045-DA	○|○	83309	...		...	...
81-88	Models with 7000, 9000, 12000 lb Axles	D2EF18045AA	○|○	83312	89409		...	...
		D2EF-18045-AA	○|○	83312	89409		...	...
		D2KF18045AA	○|○	83312	89409		...	...
		D2KF-18045-AA	○|○	83312	89409		...	...
		D7HF18045FA	○|○	83312	89409		...	...
		D7HF-18045-FA	○|○	83312	89409		...	...
		D7HT18045BA	○|○	83312	89409		...	...
		D7HT-18045-BA	○|○	83312	89409		...	...

LT9000

81-85	Models with 7000, 9000, 12000, 16000 lb Axles	D2HF18045AA	○|○	83314	...		...	...
		D2HF-18045-AA	○|○	83314	...		...	...
		D2HT18045CA	○|○	83314	...		...	...
		D2HT-18045-CA	○|○	83314	...		...	...
81-90	Models with 7000, 9000, 12000, 16000 lb Axles	D2HF18045BA	○|○	83309	...		...	...
		D2HF-18045-BA	○|○	83309	...		...	...
		D7HT18045DA	○|○	83309	...		...	...
		D7HT-18045-DA	○|○	83309	...		...	...
81-97	Models with 7000, 9000, 12000 lb Axles	D2EF18045AA	○|○	83312	89409		...	...
		D2EF-18045-AA	○|○	83312	89409		...	...
		D2KF18045AA	○|○	83312	89409		...	...
		D2KF-18045-AA	○|○	83312	89409		...	...
		D7HF18045FA	○|○	83312	89409		...	...

FORD (CONT'D)

LT9000 (cont'd)

Year / Ano / Année	Model / Modelo / Modle	OEM #		Front			Rear	
				Fleetline	GasSLX		Fleetline	GasSLX
81-97	Models with 7000, 9000, 12000 lb Axles	D7HF-18045-FA	O|O	83312	89409		...	...
		D7HT18045BA	O|O	83312	89409		...	...
		D7HT-18045-BA	O|O	83312	89409		...	...
91-97	Models with 52" Taperleaf Spring	F1HT18045GA	O|O	85006	...		...	...
		F1HT18045GB	O|O	85006	...		...	...
		F1HT-18045-GA	O|O	85006	...		...	...
		F1HT-18045-GB	O|O	85006	...		...	...
91-97	Models with 58" Parabolic Taperleaf Spring	F1HT18045RA	O|O	89402	...		...	...
		F1HT18045RB	O|O	89402	...		...	...
		F1HT-18045-RA	O|O	89402	...		...	...
		F1HT-18045-RB	O|O	89402	...		...	...
91-97	Models with 4000, 4500, 5400, 6000, 7200 lb Multileaf Springs and with 9000, 10000, 12000 or 16000 lb Axles	F1HT18045CB	O|O	83216	...		...	...
		F1HT-18045-CB	O|O	83216	...		...	...
91-97	Models with 4500, 5400, 6000, 7200, 10000 lb Multileaf Springs and with 10000, 12000, 13200, 16000 lb Axles	F1HT18045DB	O|O	83308	...		...	...
		F1HT-18045-DB	O|O	83308	...		...	...
91-97	Models with Multleaf Spring	F1HT18045DA	O|O	83312	89409		...	...
		F1HT-18045-DA	O|O	83312	89409		...	...
94-97	Models with 21000 or 23000 lb. with 46" Taperleaf Spring	F4HT18080BA		...	...	O|O	85001	89410
		F4HT-18080-BA		...	...	O|O	85001	89410

LTA9000

91-97	Models with 4000, 4500, 5400, 6000 or 7200 lb Multileaf Springs and with 9000, 10000, 12000 or 16000 lb Axles	F1HT18045CB	O|O	83216	...		...	...
		F1HT-18045-CB	O|O	83216	...		...	...
91-97	Models With 4500, 5400, 6000, 7200 or 10000 lb. Multileaf Spring	F1HT18045CA	O|O	83308	...		...	...
		F1HT-18045-CA	O|O	83308	...		...	...
91-97	Models with Hendrickson Rear Air Suspension	47902-28		...	...	O|O	85013	89414
		4790228		...	...	O|O	85013	89414

LTLA9000

92-97	Models with 4000, 4500, 5400, 6000 or 7200 lb Multileaf Springs and with 9000, 10000, 12000 or 16000 lb Axles	F1HT18045CB	O|O	83216	...		...	...
		F1HT-18045-CB	O|O	83216	...		...	...
92-97	Models with 4500, 5400, 6500 lb 58" Parabolic Taperleaf Spring	F0HT18045CA	O|O	85006	...		...	...
		F0HT-18045-CA	O|O	85006	...		...	...
		F1HT18045HB	O|O	85006	...		...	...
		F1HT-18045-HB	O|O	85006	...		...	...
92-97	Models With 4500, 5400, 6000, 7200 or 10000 lb. Multileaf Spring	F1HT18045CA	O|O	83308	...		...	...
		F1HT-18045-CA	O|O	83308	...		...	...
92-97	Models with Hendrickson Rear Air Suspension	47902-28		...	...	O|O	85013	89414
		4790228		...	...	O|O	85013	89414

LTS9000

81-85	Models with 7000, 9000, 12000, 16000 lb Axles	D2HF18045AA	O|O	83314	...		...	...
		D2HF-18045-AA	O|O	83314	...		...	...
		D2HT18045CA	O|O	83314	...		...	...
		D2HT-18045-CA	O|O	83314	...		...	...
81-89	Models with 16000 lb Axle	D0HA18045E	O|O	83312	89409		...	...
		D0HA-18045-E	O|O	83312	89409		...	...
		D2HF18045DA	O|O	83312	89409		...	...
		D2HF-18045-DA	O|O	83312	89409		...	...
		D7HT18045EA	O|O	83312	89409		...	...
		D7HT-18045-EA	O|O	83312	89409		...	...
81-90	Models with 7000, 9000, 12000, 16000 lb Axles	D2HF18045BA	O|O	83309	...		...	...

APPLICATION GUIDE - TRUCKS, TRAILERS AND BUSES

Year Ano Année	Model Modelo Modle	OEM #		Front			Rear	
				Fleetline	GasSLX		Fleetline	GasSLX
FORD (CONT'D)								
LTS9000 (cont'd)								
81-90	Models with 7000, 9000, 12000, 16000 lb Axles	D2HF-18045-BA	○|○	**83309**	...		...	...
		D7HT18045DA	○|○	**83309**	...		...	...
		D7HT-18045-DA	○|○	**83309**	...		...	...
MOTORHOME CHASSIS								
57-76	P-400 & 4000 Motorhome Chassis with H.D. Springs	.....	○|○	**85012**	89413		...	...
73-76	M-400 & M-500 Motorhome Chassis	.....		...	...	○|○	**83225**	...
		.....	○|○	**85012**	89413		...	...
MOTORHOME CHASSIS / F53								
99-04	F53 Chassis with 16,000 lb GVW to 22,000 lb GVW	1C34-18045-JA	○|○	**83209**	89414		...	...
		1C3418045AA	○|○	**83209**	89414		...	...
		1C3418045JA	○|○	**83209**	89414		...	...
		9U9Z18124A	○|○	**83209**	89414		...	...
		9U9Z18124B	○|○	**83209**	89414		...	...
		9U9Z-18124-A	○|○	**83209**	89414		...	...
		9U94-18045-AA	○|○	**83209**	89414		...	...
		9U9418045AA	○|○	**83209**	89414		...	...
		ASH294	○|○	**83209**	89414		...	...
		ASH1022	○|○	**83209**	89414		...	...
		ASH1205	○|○	**83209**	89414		...	...
		ASH1228	○|○	**83209**	89414		...	...
		ASH1229	○|○	**83209**	89414		...	...
		ASH25822	○|○	**83209**	89414		...	...
		ASH25823	○|○	**83209**	89414		...	...
		ASH-294	○|○	**83209**	89414		...	...
		ASH-1022	○|○	**83209**	89414		...	...
		ASH-1205	○|○	**83209**	89414		...	...
		ASH-1228	○|○	**83209**	89414		...	...
		ASH-1229	○|○	**83209**	89414		...	...
		ASH-25822	○|○	**83209**	89414		...	...
		ASH-25823	○|○	**83209**	89414		...	...
		AT620	○|○	**83209**	89414		...	...
		AT766	○|○	**83209**	89414		...	...
		AT-620	○|○	**83209**	89414		...	...
		AT-766	○|○	**83209**	89414		...	...
		HU9Z18124B	○|○	**83209**	89414		...	...
		HU9Z18124C	○|○	**83209**	89414		...	...
		HU9418045AA	○|○	**83209**	89414		...	...
		HU9418045BA	○|○	**83209**	89414		...	...
99-04	Motorhome Chassis with 20,500 lb GVW to 22,000 lb GVW	9U9Z18125A		...	...	○|○	**83122**	89406
		9U9Z-18125-A		...	...	○|○	**83122**	89406
		9U94-18080-AA		...	...	○|○	**83122**	89406
		9U9418080AA		...	...	○|○	**83122**	89406
		ASH137		...	...	○|○	**83122**	89406
		ASH1023		...	...	○|○	**83122**	89406
		ASH1206		...	...	○|○	**83122**	89406
		ASH1230		...	...	○|○	**83122**	89406
		ASH25824		...	...	○|○	**83122**	89406
		ASH-137		...	...	○|○	**83122**	89406
		ASH-1023		...	...	○|○	**83122**	89406
		ASH-1206		...	...	○|○	**83122**	89406
		ASH-1230		...	...	○|○	**83122**	89406
		ASH-25824		...	...	○|○	**83122**	89406

FORD (CONT'D)

MOTORHOME CHASSIS / F53 (cont'd)

Year Ano Année	Model Modelo Modle	OEM #		Front			Rear	
				Fleetline	GasSLX		Fleetline	GasSLX
99-04	Motorhome Chassis with 20,500 lb GVW to 22,000 lb GVW	AT621		...	...		83122	89406
		AT-621		...	...		83122	89406
		HU9Z18125B		...	...		83122	89406
		HU9Z-18125-B		...	...		83122	89406
06-09	F53 Chassis with 16,000 lb GVW to 22,000 lb GVW	1C34-18045-JA		83209	89414		...	...
		1C3418045AA		83209	89414		...	...
		1C3418045JA		83209	89414		...	...
		9U9Z18124A		83209	89414		...	...
		9U9Z18124B		83209	89414		...	...
		9U9Z-18124-A		83209	89414		...	...
		9U94-18045-AA		83209	89414		...	...
		9U9418045AA		83209	89414		...	...
		ASH294		83209	89414		...	...
		ASH1022		83209	89414		...	...
		ASH1205		83209	89414		...	...
		ASH1228		83209	89414		...	...
		ASH1229		83209	89414		...	...
		ASH25822		83209	89414		...	...
		ASH25823		83209	89414		...	...
		ASH-294		83209	89414		...	...
		ASH-1022		83209	89414		...	...
		ASH-1205		83209	89414		...	...
		ASH-1228		83209	89414		...	...
		ASH-1229		83209	89414		...	...
		ASH-25822		83209	89414		...	...
		ASH-25823		83209	89414		...	...
		AT620		83209	89414		...	...
		AT766		83209	89414		...	...
		AT-620		83209	89414		...	...
		AT-766		83209	89414		...	...
		HU9Z18124B		83209	89414		...	...
		HU9Z18124C		83209	89414		...	...
		HU9418045AA		83209	89414		...	...
		HU9418045BA		83209	89414		...	...
06-09	Motorhome Chassis with 20,500 lb GVW to 22,000 lb GVW	9U9Z18125A		...	...		83122	89406
		9U9Z-18125-A		...	...		83122	89406
		9U94-18080-AA		...	...		83122	89406
		9U9418080AA		...	...		83122	89406
		ASH137		...	...		83122	89406
		ASH1023		...	...		83122	89406
		ASH1206		...	...		83122	89406
		ASH1230		...	...		83122	89406
		ASH25824		...	...		83122	89406
		ASH-137		...	...		83122	89406
		ASH-1023		...	...		83122	89406
		ASH-1206		...	...		83122	89406
		ASH-1230		...	...		83122	89406
		ASH-25824		...	...		83122	89406
		AT621		...	...		83122	89406
		AT-621		...	...		83122	89406
		HU9Z18125B		...	...		83122	89406
		HU9Z-18125-B		...	...		83122	89406
08-09	Motorhome Chassis with 16,000 lb GVW to 18,000 lb GVW	9U9Z18125B		...	...		83122	89406
		9U9Z-18125-B		...	...		83122	89406

FORD (CONT'D)

MOTORHOME CHASSIS / F53 (cont'd)

Year Ano Année	Model Modelo Modle	OEM #	Front Fleetline	Front GasSLX	Rear Fleetline	Rear GasSLX
08-09	Motorhome Chassis with 16,000 lb GVW to 18,000 lb GVW	ASH25825	...	...	83122	89406
		ASH-25825	...	...	83122	89406
11-20	F53 Stripped Chassis Commercial Stripped Chassis, 19,500 lb to 22,000 lb GVW	47 1700 007 203	85013	89414	...	...
		ASH24634	85013	89414	...	...
		DU94-18045-CB	85013	89414	...	...
11-20	F53 Stripped Chassis With BT Delivery Van Pack, 16,000 LB. GVW	471700007117	...	...	85010	...
		471700009775	...	...	85010	...
		DU94-18080-CA	...	...	85010	...
		DU94-18080-CB	...	...	85010	...
		DU9418080CA	...	...	85010	...
		DU9418080CB	...	...	85010	...
11-22	F53 Chassis with 16,000 lb GVW to 22,000 lb GVW	1C34-18045-JA	83209	89414	...	...
		1C3418045AA	83209	89414	...	...
		1C3418045JA	83209	89414	...	...
		9U9Z18124A	83209	89414	...	...
		9U9Z18124B	83209	89414	...	...
		9U9Z-18124-A	83209	89414	...	...
		9U94-18045-AA	83209	89414	...	...
		9U9418045AA	83209	89414	...	...
		ASH294	83209	89414	...	...
		ASH1022	83209	89414	...	...
		ASH1205	83209	89414	...	...
		ASH1228	83209	89414	...	...
		ASH1229	83209	89414	...	...
		ASH25822	83209	89414	...	...
		ASH25823	83209	89414	...	...
		ASH-294	83209	89414	...	...
		ASH-1022	83209	89414	...	...
		ASH-1205	83209	89414	...	...
		ASH-1228	83209	89414	...	...
		ASH-1229	83209	89414	...	...
		ASH-25822	83209	89414	...	...
		ASH-25823	83209	89414	...	...
		AT620	83209	89414	...	...
		AT766	83209	89414	...	...
		AT-620	83209	89414	...	...
		AT-766	83209	89414	...	...
		HU9Z18124B	83209	89414	...	...
		HU9Z18124C	83209	89414	...	...
		HU9418045AA	83209	89414	...	...
		HU9418045BA	83209	89414	...	...
11-22	Motorhome Chassis with 16,000 lb GVW to 18,000 lb GVW	9U9Z18125B	...	...	83122	89406
		9U9Z-18125-B	...	...	83122	89406
		ASH25825	...	...	83122	89406
		ASH-25825	...	...	83122	89406
11-22	Motorhome Chassis with 20,500 lb GVW to 22,000 lb GVW	9U9Z18125A	...	...	83122	89406
		9U9Z-18125-A	...	...	83122	89406
		9U94-18080-AA	...	...	83122	89406
		9U9418080AA	...	...	83122	89406
		ASH137	...	...	83122	89406
		ASH1023	...	...	83122	89406
		ASH1206	...	...	83122	89406
		ASH1230	...	...	83122	89406

FORD (CONT'D)

MOTORHOME CHASSIS / F53 (cont'd)

Year Ano Année	Model Modelo Modle	OEM #		Front Fleetline	Front GasSLX		Rear Fleetline	Rear GasSLX
11-22	Motorhome Chassis with 20,500 lb GVW to 22,000 lb GVW	ASH25824		...	...	O|O	83122	89406
		ASH-137		...	...	O|O	83122	89406
		ASH-1023		...	...	O|O	83122	89406
		ASH-1206		...	...	O|O	83122	89406
		ASH-1230		...	...	O|O	83122	89406
		ASH-25824		...	...	O|O	83122	89406
		AT621		...	...	O|O	83122	89406
		AT-621		...	...	O|O	83122	89406
		HU9Z18125B		...	...	O|O	83122	89406
		HU9Z-18125-B		...	...	O|O	83122	89406
88-97	F53 Chassis with 16,000 lb GVW to 22,000 lb GVW	1C34-18045-JA	O|O	83209	89414		...	...
		1C3418045AA	O|O	83209	89414		...	...
		1C3418045JA	O|O	83209	89414		...	...
		9U9Z18124A	O|O	83209	89414		...	...
		9U9Z18124B	O|O	83209	89414		...	...
		9U9Z-18124-A	O|O	83209	89414		...	...
		9U94-18045-AA	O|O	83209	89414		...	...
		9U9418045AA	O|O	83209	89414		...	...
		ASH294	O|O	83209	89414		...	...
		ASH1022	O|O	83209	89414		...	...
		ASH1205	O|O	83209	89414		...	...
		ASH1228	O|O	83209	89414		...	...
		ASH1229	O|O	83209	89414		...	...
		ASH25822	O|O	83209	89414		...	...
		ASH25823	O|O	83209	89414		...	...
		ASH-294	O|O	83209	89414		...	...
		ASH-1022	O|O	83209	89414		...	...
		ASH-1205	O|O	83209	89414		...	...
		ASH-1228	O|O	83209	89414		...	...
		ASH-1229	O|O	83209	89414		...	...
		ASH-25822	O|O	83209	89414		...	...
		ASH-25823	O|O	83209	89414		...	...
		AT620	O|O	83209	89414		...	...
		AT766	O|O	83209	89414		...	...
		AT-620	O|O	83209	89414		...	...
		AT-766	O|O	83209	89414		...	...
		HU9Z18124B	O|O	83209	89414		...	...
		HU9Z18124C	O|O	83209	89414		...	...
		HU9418045AA	O|O	83209	89414		...	...
		HU9418045BA	O|O	83209	89414		...	...
88-97	F53 Motorhome Chassis (Over 30 feet)	...	O|O	83125	...		...	...

N AND NT 89" BBC CONVENTIONAL CAB

64-69	M-750, N-800, N-850, N-900, N-950 with 6000, 7000, 9000, 11000, 12000 lb. Axles	C1TT18045C	O|O	83312	89409		...	...
		C1TT-18045-C	O|O	83312	89409		...	...
64-69	N-500, N-550, N-600, N-650, N-700, N-750	C7PF18077A		...	...	O|O	83225	...
		C7PF-18077-A		...	...	O|O	83225	...
		D2TF18080HA		...	...	O|O	83225	...
		D2TF-18080-HA		...	...	O|O	83225	...
64-69	N-500, N-550, N-600, N-650, N-700 with 5000, 6000, 7000 & 9000 lb. Axles	D2TF18045GA	O|O	83308	...		...	...
		D2TF-18045-GA	O|O	83308	...		...	...
64-69	N-600, N-650, N-700, N-750, N-800, N-850, N-900, N-950 with 6000, 7000, 9000, 11000, 12000 lb. Axles	C6PF18077DL	O|O	83312	89409		...	...

FORD (CONT'D)

N AND NT 89" BBC CONVENTIONAL CAB (cont'd)

Year Ano Année	Model Modelo Modle	OEM #	Front Fleetline	Front GasSLX	Rear Fleetline	Rear GasSLX
64-69	N-600, N-650, N-700, N-750, N-800, N-850, N-900, N-950 with 6000, 7000, 9000, 11000, 12000 lb. Axles	C6PF-18077-DL	83312	89409	...	...
64-69	N-1100 with 11000 thru 15000 lb. Axles	C6PF18077DN	83314	...	...	...
		C6PF-18077-DN	83314	...	...	...
67-69	N-850, N-900, N-950, N-1000, NT-850, NT-900,NT-950, NT-1000 with 6000, 7000, 9000, 11000, 12000, 15000, 18000 lb. Axles	C1TT18045D	G63406	...	...	...
		C1TT-18045-D	G63406	...	...	...
	Additional O.E.M. Interchanges	680029	85301			
		C6PF18077DD	83216			
		C6PF18077DE	83219			
		C6PF-18077-DD	83216			
		C6PF-18077-DE	83219			
	HN-80 with 21000 lb or 23000 lb Axle & 52" Taper leaf Rear Suspension	F6HT18080JA	...	...	85305	...
		F6HT-18080-JA	...	...	85305	...
	Models with O.E.M. Number	2C4Z18124BA	83175	...	...	...
		2C4Z-18124-BA	83175	...	...	...
		2C7Z18125AA	...	...	G63837	...
		2C7Z18125CA	...	...	G63607	...
		2C7Z-18125-AA	...	...	G63837	...
		2C7Z-18125-CA	...	...	G63607	...
		3U2Z18124BAA	G63809	...	...	...
		3U2Z18124BV	G63614	...	...	...
		3U2Z18124BW	G63614	...	...	...
		3U2Z18124EA	G63772	...	...	...
		3U2Z18124FA	G63608	...	...	...
		3U2Z18124FAA	G63809	...	...	...
		3U2Z18124JAA	G63614	...	...	...
		3U2Z18124YAA	G63809	...	...	...
		3U2Z18125AD	...	...	69575	...
		3U2Z18125CA	...	...	G63607	...
		3U2Z18125DA	...	...	G63525	...
		3U2Z18125EA	...	...	G63524	...
		3U2Z18125RA	...	...	G63623	...
		3U2Z-18124-BAA	G63809	...	...	...
		3U2Z-18124-BV	G63614	...	...	...
		3U2Z-18124-BW	G63614	...	...	...
		3U2Z-18124-EA	G63772	...	...	...
		3U2Z-18124-FA	G63608	...	...	...
		3U2Z-18124-FAA	G63809	...	...	...
		3U2Z-18124-JAA	G63614	...	...	...
		3U2Z-18124-YAA	G63809	...	...	...
		3U2Z-18125-AD	...	...	69575	...
		3U2Z-18125-CA	...	...	G63607	...
		3U2Z-18125-DA	...	...	G63525	...
		3U2Z-18125-EA	...	...	G63524	...
		3U2Z-18125-RA	...	...	G63623	...
		4C4O18045AA	83163	...	...	...
		4C4O18045BB	83135	...	...	...
		4C4O18045CA	85957	...	...	...
		4C4O18045DB	85927	...	...	...
		4C4O18045EA	85926	...	...	...
		4C4O18045GA	83175	...	...	...
		4C4O18045HA	83135	...	...	...
		4C4O18045JA	85928	...	...	...

APPLICATION GUIDE - TRUCKS, TRAILERS AND BUSES

Year Ano Année	Model Modelo Modle	OEM #		Front			Rear	
				Fleetline	GasSLX		Fleetline	GasSLX
FORD (CONT'D)								
	Models with O.E.M. Number	4C4O18045KA	O|O	**85976**	...		...	...
		4C4O18045LA	O|O	**85976**	...		...	...
		4C4O18045MA	O|O	**85926**	...		...	...
		4C4O18080AA		...	...	O|O	**83101**	...
		4C4O18080BA		...	...	–|O	**83317**	...
		4C4O-18045-AA	O|O	**83163**	...		...	...
		4C4O-18045-BB	O|O	**83135**	...		...	...
		4C4O-18045-CA	O|O	**85957**	...		...	...
		4C4O-18045-DB	O|O	**85927**	...		...	...
		4C4O-18045-EA	O|O	**85926**	...		...	...
		4C4O-18045-GA	O|O	**83175**	...		...	...
		4C4O-18045-HA	O|O	**83135**	...		...	...
		4C4O-18045-JA	O|O	**85928**	...		...	...
		4C4O-18045-KA	O|O	**85976**	...		...	...
		4C4O-18045-LA	O|O	**85976**	...		...	...
		4C4O-18045-MA	O|O	**85926**	...		...	...
		4C4O-18080-AA		...	...	O|O	**83101**	...
		4C4O-18080-BA		...	...	–|O	**83317**	...
		4C4Z18124AB	O|O	**83163**	...		...	...
		4C4Z18124BB	O|O	**83135**	...		...	...
		4C4Z18124CB	O|O	**85957**	...		...	...
		4C4Z18124DC	O|O	**85927**	...		...	...
		4C4Z18124EA	O|O	**85926**	...		...	...
		4C4Z18124GB	O|O	**83175**	...		...	...
		4C4Z18124KA	O|O	**85976**	...		...	...
		4C4Z18124LA	O|O	**85976**	...		...	...
		4C4Z18124M	O|O	**85926**	...		...	...
		4C4Z18125AB		...	...	O|O	**83101**	...
		4C4Z-18124-AB	O|O	**83163**	...		...	...
		4C4Z-18124-BB	O|O	**83135**	...		...	...
		4C4Z-18124-CB	O|O	**85957**	...		...	...
		4C4Z-18124-DC	O|O	**85927**	...		...	...
		4C4Z-18124-EA	O|O	**85926**	...		...	...
		4C4Z-18124-GB	O|O	**83175**	...		...	...
		4C4Z-18124-KA	O|O	**85976**	...		...	...
		4C4Z-18124-LA	O|O	**85976**	...		...	...
		4C4Z-18124-M	O|O	**85926**	...		...	...
		4C4Z-18125-AB		...	...	O|O	**83101**	...
		4U2Z18V124AA	–|–	**G63678**	...		...	...
		4U2Z-18V124-AA	–|–	**G63678**	...		...	...
		5C3Z18124JA	–|O	**G63969**	...		...	...
		5C3Z18125CF		...	...	O|O	**77969**	...
		5C3Z18125DA		...	...	O|O	**77968**	...
		5C3Z-18124-JA	–|O	**G63969**	...		...	...
		5C3Z-18125-CF		...	...	O|O	**77969**	...
		5C3Z-18125-DA		...	...	O|O	**77968**	...
		5U2Z18V124AA	–|–	**G63714**	...		...	...
		5U2Z18V124AHA	–|O	**G63622**	...		...	...
		5U2Z18V124AU	–|–	**G63772**	...		...	...
		5U2Z18V124BA	–|O	**G63716**	...		...	...
		5U2Z18V124CAA	O|O	**G63809**	...		...	...
		5U2Z18V124DB	O|O	**G63455**	...		...	...
		5U2Z18V124GA	O|O	**G63809**	...		...	...
		5U2Z18V124LA	–|O	**G63929**	...		...	...
		5U2Z18V125AE		...	...	O|O	**G63808**	...

APPLICATION GUIDE - TRUCKS, TRAILERS AND BUSES

FORD (CONT'D)

Year Ano Année	Model Modelo Modle	OEM #		Front			Rear	
				Fleetline	GasSLX		Fleetline	GasSLX
	Models with O.E.M. Number	5U2Z18V125AF		...	...	o|o	G63810	...
		5U2Z18V125BDA		...	...	–|o	G63623	...
		5U2Z18V125BGA		...	...	–|o	G63778	...
		5U2Z18V125BS		...	...	–|o	G63607	...
		5U2Z18V125BT		...	...	o|o	G63525	...
		5U2Z18V125BU		...	...	o|o	G63524	...
		5U2Z18V125F		...	...	o|o	G63676	...
		5U2Z18V125G		...	...	–|o	G63837	...
		5U2Z18V125H		...	...	o|o	G63406	...
		5U2Z-18V124-AA	–|–	G63714	...		...	...
		5U2Z-18V124-AHA	–|o	G63622	...		...	...
		5U2Z-18V124-AU	–|–	G63772	...		...	...
		5U2Z-18V124-BA	–|o	G63716	...		...	...
		5U2Z-18V124-CAA	o|o	G63809	...		...	...
		5U2Z-18V124-DB	o|o	G63455	...		...	...
		5U2Z-18V124-GA	o|o	G63809	...		...	...
		5U2Z-18V124-LA	–|o	G63929	...		...	...
		5U2Z-18V125-AE		...	...	o|o	G63808	...
		5U2Z-18V125-AF		...	...	o|o	G63810	...
		5U2Z-18V125-BDA		...	...	–|o	G63623	...
		5U2Z-18V125-BGA		...	...	–|o	G63778	...
		5U2Z-18V125-BS		...	...	–|o	G63607	...
		5U2Z-18V125-BT		...	...	o|o	G63525	...
		5U2Z-18V125-BU		...	...	o|o	G63524	...
		5U2Z-18V125-F		...	...	o|o	G63676	...
		5U2Z-18V125-G		...	...	–|o	G63837	...
		5U2Z-18V125-H		...	...	o|o	G63406	...
		6C2Z18124B	–|o	G63929	...		...	...
		6C2Z-18124-B	–|o	G63929	...		...	...
		6E7O18B038AA		...	...	o|o	83364	...
		6E7O-18B038-AA		...	...	o|o	83364	...
		6E7Z18124AB	o|o	83364	...		...	...
		6E7Z-18124-AB	o|o	83364	...		...	...
		6ETZ18125A		...	...	o|o	83364	...
		6ETZ-18125-A		...	...	o|o	83364	...
		6U2Z18V125A		...	...	–|o	G63837	...
		6U2Z18V125B		...	...	–|o	G63607	...
		6U2Z-18V125-B		...	...	–|o	G63607	...
		7C34-18045-HB	–|o	G63969	...		...	...
		7C34-18080-DCB		...	...	o|o	77968	...
		7C3418045HB	–|o	G63969	...		...	...
		7C3418080DCB		...	...	o|o	77968	...
		7W7Z18125B		...	...	–|o	69574	...
		7W7Z-18125-B		...	...	–|o	69574	...
		47902-8		...	...	o|o	83122	89406
		57365-111	o|o	85006	...		...	...
		70127	o|o	85006	...		...	...
		70128	o|o	85006	...		...	...
		479028		...	...	o|o	83122	89406
		3199942	o|o	89402	...		...	...
		3919942	o|o	89402	...		...	...
		57365111	o|o	85006	...		...	...
		90044769		...	...	o|o	83207	89407
		90044770		...	...	o|o	83207	89407
		AT504G		...	...	–|o	G63679	...

APPLICATION GUIDE - TRUCKS, TRAILERS AND BUSES

FORD (CONT'D)

Year Ano Année	Model Modelo Modle	OEM #	Front Fleetline	Front GasSLX	Rear Fleetline	Rear GasSLX
	Models with O.E.M. Number	AT-504G	...	...	G63679	...
		AX85A	83219	...	...	...
		AX267A	83309	...	...	...
		AX-267A	83309	...	...	...
		B3Q18124A	83219	...	...	...
		B3Q-18124-A	83219	...	...	...
		B6TZ18124A	83219	...	...	...
		B6TZ-18124-A	83219	...	...	...
		B7T18124C	83225	...	...	...
		B7T-18124-C	83225	...	...	...
		B7TZ18124B	83216	...	...	...
		B7TZ18124C	83216	...	...	...
		B7TZ18124D	83219	...	...	...
		B7TZ-18124-B	83216	...	...	...
		B7TZ-18124-C	83216	...	...	...
		B7TZ-18124-D	83219	...	...	...
		B8Q18125A	...	...	85307	...
		B8Q-18125-A	...	...	85307	...
		B8QZ18124A	83312	89409	...	...
		B8QZ-18124-A	83312	89409	...	...
		B8TZ18124A	83219	...	...	...
		B8TZ-18124-A	83219	...	...	...
		B9TT18045C	83219	...	...	...
		B9TT18045D	83219	...	...	...
		B9TT-18045-C	83219	...	...	...
		B9TT-18045-D	83219	...	...	...
		C0TT18045A	83219	...	...	...
		C0TT18045D	83216	...	...	...
		C0TT-18045-A	83219	...	...	...
		C0TT-18045-D	83216	...	...	...
		C0TZ18124A	83216	...	...	...
		C0TZ-18124-A	83216	...	...	...
		C1TT18045G	83216	...	...	...
		C1TT-18045-G	83216	...	...	...
		C1TZ18045C	83312	89409	...	...
		C1TZ18124B	83216	...	...	...
		C1TZ18124C	83312	89409	...	...
		C1TZ18124D	83309	...	...	...
		C1TZ18124E	83312	89409	...	...
		C1TZ18124F	83312	89409	...	...
		C1TZ18124N	83314	...	...	...
		C1TZ18124P	83312	89409	...	...
		C1TZ-18045-C	83312	89409	...	...
		C1TZ-18124-B	83216	...	...	...
		C1TZ-18124-C	83312	89409	...	...
		C1TZ-18124-D	83309	...	...	...
		C1TZ-18124-E	83312	89409	...	...
		C1TZ-18124-F	83312	89409	...	...
		C1TZ-18124-N	83314	...	...	...
		C1TZ-18124-P	83312	89409	...	...
		C2TA18045B	83308	...	...	...
		C2TA-18045-B	83308	...	...	...
		C2TZ18124A	83308	...	...	...
		C2TZ-18124-A	83308	...	...	...
		C3TA18045A	83216	...	...	...

APPLICATION GUIDE - TRUCKS, TRAILERS AND BUSES

FORD (CONT'D)

Year Ano Année	Model Modelo Modle	OEM #	Front Fleetline	Front GasSLX	Rear Fleetline	Rear GasSLX
	Models with O.E.M. Number	C3TA-18045-A	83216	...	...	...
		C3TZ18124A	83308	...	...	...
		C3TZ-18124-A	83308	...	...	...
		C4HZ18124A	83312	89409	...	...
		C4HZ18124B	83309	...	...	...
		C4HZ18124C	83314	...	...	...
		C4HZ18124D	83312	89409	...	...
		C4HZ18124F	83308	...	...	...
		C4HZ-18124-A	83312	89409	...	...
		C4HZ-18124-B	83309	...	...	...
		C4HZ-18124-C	83314	...	...	...
		C4HZ-18124-D	83312	89409	...	...
		C4HZ-18124-F	83308	...	...	...
		C4PF18045H	83216	...	...	...
		C4PF-18045-H	83216	...	...	...
		C4TZ18124AA	83308	...	...	...
		C4TZ18124AB	83308	...	...	...
		C4TZ18124B	83308	...	...	...
		C4TZ-18124-AA	83308	...	...	...
		C4TZ-18124-AB	83308	...	...	...
		C4TZ-18124-B	83308	...	...	...
		C5TZ18124A	83308	...	...	...
		C5TZ-18124-A	83308	...	...	...
		C6TA18045U	85301	...	...	...
		C6TA18045V	85301	...	...	...
		C6TA-18045-U	85301	...	...	...
		C6TA-18045-V	85301	...	...	...
		C6TZ18124D	85301	...	...	...
		C6TZ18124E	85301	...	...	...
		C6TZ18124H	85301	...	...	...
		C6TZ18124J	85301	...	...	...
		C6TZ-18124-D	85301	...	...	...
		C6TZ-18124-E	85301	...	...	...
		C6TZ-18124-H	85301	...	...	...
		C6TZ-18124-J	85301	...	...	...
		C7HZ18124A	83312	89409	...	...
		C7HZ-18124-A	83312	89409	...	...
		C7TA18045R	83216	...	...	...
		C7TA18045Z	85301	...	...	...
		C7TA-18045-R	83216	...	...	...
		C7TA-18045-Z	85301	...	...	...
		C8PF18045CM	83216	...	...	...
		C8PF-18045-CM	83216	...	...	...
		D0HA18045D	83309	...	...	...
		D0HA-18045-D	83309	...	...	...
		D0HZ18124A	83309	...	...	...
		D0HZ18124B	83312	89409	...	...
		D0HZ18124C	83314	...	...	...
		D0HZ-18124-A	83309	...	...	...
		D0HZ-18124-B	83312	89409	...	...
		D0HZ-18124-C	83314	...	...	...
		D1TZ18124D	83308	...	...	...
		D1TZ18124E	83216	...	...	...
		D1TZ18124F	83312	89409	...	...
		D1TZ-18124-D	83308	...	...	...

APPLICATION GUIDE - TRUCKS, TRAILERS AND BUSES

FORD (CONT'D)

Year Ano Année	Model Modelo Modle	OEM #		Front			Rear	
				Fleetline	GasSLX		Fleetline	GasSLX
	Models with O.E.M. Number	D1TZ-18124-E	O|O	83216	...		...	...
		D1TZ-18124-F	O|O	83312	89409		...	...
		D2EF18124AA	O|O	83312	89409		...	...
		D2EF-18124-AA	O|O	83312	89409		...	...
		D2HA18045EB	O|O	85301	...		...	...
		D2HA18045F1A	O|O	85301	...		...	...
		D2HA18045F1B	O|O	85301	...		...	...
		D2HA18045F2A	O|O	85301	...		...	...
		D2HA18045F2B	O|O	85301	...		...	...
		D2HA-18045-EB	O|O	85301	...		...	...
		D2HA-18045-F1A	O|O	85301	...		...	...
		D2HA-18045-F1B	O|O	85301	...		...	...
		D2HA-18045-F2A	O|O	85301	...		...	...
		D2HA-18045-F2B	O|O	85301	...		...	...
		D2HF18045A	O|O	83314	...		...	...
		D2HF18124AA	O|O	83314	...		...	...
		D2HF-18045-A	O|O	83314	...		...	...
		D2HF-18124-AA	O|O	83314	...		...	...
		D2HT18045EA	O|O	83312	89409		...	...
		D2HT-18045-EA	O|O	83312	89409		...	...
		D2HZ18125A		...	...	O|O	83209	89414
		D2HZ18125B		...	...	O|O	83209	89414
		D2HZ-18125-A		...	...	O|O	83209	89414
		D2HZ-18125-B		...	...	O|O	83209	89414
		D2KF18124AA	O|O	83312	89409		...	...
		D2KF-18124-AA	O|O	83312	89409		...	...
		D2TA18045AAA	O|O	83219	...		...	...
		D2TA18045ZA	O|O	83219	...		...	...
		D2TA-18045-AAA	O|O	83219	...		...	...
		D2TA-18045-ZA	O|O	83219	...		...	...
		D2TF18045FA	O|O	83312	89409		...	...
		D2TF18124F	O|O	83309	...		...	...
		D2TF-18045-FA	O|O	83312	89409		...	...
		D2TF-18124-F	O|O	83309	...		...	...
		D2TZ18124A	O|O	83308	...		...	...
		D2TZ18124E	O|O	83312	89409		...	...
		D2TZ18124F	O|O	83309	...		...	...
		D2TZ18124G	O|O	83314	...		...	...
		D2TZ18124H	O|O	83308	...		...	...
		D2TZ18124J	O|O	83312	89409		...	...
		D2TZ-18124-A	O|O	83308	...		...	...
		D2TZ-18124-E	O|O	83312	89409		...	...
		D2TZ-18124-F	O|O	83309	...		...	...
		D2TZ-18124-G	O|O	83314	...		...	...
		D2TZ-18124-H	O|O	83308	...		...	...
		D2TZ-18124-J	O|O	83312	89409		...	...
		D3TA18045BA	O|O	83219	...		...	...
		D3TA-18045-BA	O|O	83219	...		...	...
		D3TZ18124B	O|O	83219	...		...	...
		D3TZ-18124-B	O|O	83219	...		...	...
		D4HA18080A		...	...	O|O	83209	89414
		D4HA-18080-A		...	...	O|O	83209	89414
		D4TF18045AA	O|O	83312	89409		...	...
		D4TF-18045-AA	O|O	83312	89409		...	...
		D4TZ18124J	O|O	83308	...		...	...

FORD (CONT'D)

Year Ano Année	Model Modelo Modle	OEM #		Front			Rear	
				Fleetline	GasSLX		Fleetline	GasSLX
	Models with O.E.M. Number	D4TZ-18124-J	O|O	83308	...		...	...
		D5TZ18124B	O|O	83308	...		...	...
		D5TZ18124C	O|O	83312	89409		...	...
		D5TZ-18124-B	O|O	83308	...		...	...
		D5TZ-18124-C	O|O	83312	89409		...	...
		D7HF18125AA		...	...	O|O	83215	...
		D7HF-18125-AA		...	...	O|O	83215	...
		D7HT18124BA	O|O	83312	89409		...	...
		D7HT18124CA	O|O	83314	...		...	...
		D7HT18124DA	O|O	83309	...		...	...
		D7HT18124EA	O|O	83312	89409		...	...
		D7HT18124FA	O|O	83312	89409		...	...
		D7HT18124GA	O|O	83308	...		...	...
		D7HT18124HA	O|O	83219	...		...	...
		D7HT18124JA	O|O	83308	...		...	...
		D7HT18124KA	O|O	85301	...		...	...
		D7HT18125DA		...	...	O|O	83215	...
		D7HT18125FA		...	...	O|O	83123	89405
		D7HT-18124-BA	O|O	83312	89409		...	...
		D7HT-18124-CA	O|O	83314	...		...	...
		D7HT-18124-DA	O|O	83309	...		...	...
		D7HT-18124-EA	O|O	83312	89409		...	...
		D7HT-18124-FA	O|O	83312	89409		...	...
		D7HT-18124-GA	O|O	83308	...		...	...
		D7HT-18124-HA	O|O	83219	...		...	...
		D7HT-18124-JA	O|O	83308	...		...	...
		D7HT-18124-KA	O|O	85301	...		...	...
		D7HT-18125-DA		...	...	O|O	83215	...
		D7HT-18125-FA		...	...	O|O	83123	89405
		D7HZ18125A		...	...	O|O	83215	...
		D7HZ-18125-A		...	...	O|O	83215	...
		D7TA18124GA	O|O	83314	...		...	...
		D7TA-18124-GA	O|O	83314	...		...	...
		D8HZ18124A	O|O	85301	...		...	...
		D8HZ18125A		...	...	O|O	83209	89414
		D8HZ18125B		...	...	O|O	83123	89405
		D8HZ-18124-A	O|O	85301	...		...	...
		D8HZ-18125-A		...	...	O|O	83209	89414
		D8HZ-18125-B		...	...	O|O	83123	89405
		E0HZ18124A	O|O	83309	...		...	...
		E0HZ-18124-A	O|O	83309	...		...	...
		E1TA18045AA	O|O	83309	...		...	...
		E1TA-18045-AA	O|O	83309	...		...	...
		E1TD18045AA	O|O	83309	...		...	...
		E1TD-18045-AA	O|O	83309	...		...	...
		E5HT18045DA	O|O	85301	...		...	...
		E5HT18045EA	O|O	85301	...		...	...
		E5HT-18045-DA	O|O	85301	...		...	...
		E5HT-18045-EA	O|O	85301	...		...	...
		E6HZ18124D	O|O	85301	...		...	...
		E6HZ18125E		...	...	O|O	85315	...
		E6HZ18125F		...	...	O|O	85315	...
		E6HZ-18124-D	O|O	85301	...		...	...
		E6HZ-18125-E		...	...	O|O	85315	...
		E6HZ-18125-F		...	...	O|O	85315	...

APPLICATION GUIDE - TRUCKS, TRAILERS AND BUSES

FORD (CONT'D)

Year Ano Année	Model Modelo Modle	OEM #		Front			Rear	
				Fleetline	GasSLX		Fleetline	GasSLX
	Models with O.E.M. Number	E7XZ18124A	−|O	G63386	...		...	...
		E7XZ18124B	−|O	G63500	...		...	...
		E7XZ18124C	−|O	G63511	...		...	...
		E7XZ18125A		...	...	−|O	G63350	...
		E7XZ18125B		...	...	−|O	G63387	...
		E7XZ18125C		...	...	O|O	G63409	...
		E7XZ18125D		...	...	O|O	G63406	...
		E7XZ18125E		...	...	O|O	G63406	...
		E7XZ18125J		...	...	O|O	G63299	...
		E7XZ-18124-A	−|O	G63386	...		...	...
		E7XZ-18124-B	−|O	G63500	...		...	...
		E7XZ-18124-C	−|O	G63511	...		...	...
		E7XZ-18125-A		...	...	−|O	G63350	...
		E7XZ-18125-B		...	...	−|O	G63387	...
		E7XZ-18125-C		...	...	O|O	G63409	...
		E7XZ-18125-D		...	...	O|O	G63406	...
		E7XZ-18125-E		...	...	O|O	G63406	...
		E7XZ-18125-J		...	...	O|O	G63299	...
		E9HZ18125A		...	...	O|O	85716	...
		E9HZ18125AA		...	...	O|O	85716	...
		E9HZ-18125-A		...	...	O|O	85716	...
		E9HZ-18125-AA		...	...	O|O	85716	...
		F0HS18045AA	O|O	85006	...		...	...
		F0HS-18045-AA	O|O	85006	...		...	...
		F0HT18045AA	O|O	85006	...		...	...
		F0HT-18045-AA	O|O	85006	...		...	...
		F0HZ18124A	O|O	85006	...		...	...
		F0HZ18124B	O|O	85006	...		...	...
		F0HZ-18124-A	O|O	85006	...		...	...
		F0HZ-18124-B	O|O	85006	...		...	...
		F1HT18045EA	O|O	89402	...		...	...
		F1HT18045EB	O|O	89402	...		...	...
		F1HT18045KB	O|O	85006	...		...	...
		F1HT18045LB	O|O	85006	...		...	...
		F1HT18045RA	O|O	89402	...		...	...
		F1HT18045RB	O|O	89402	...		...	...
		F1HT-18045-EA	O|O	89402	...		...	...
		F1HT-18045-EB	O|O	89402	...		...	...
		F1HT-18045-KB	O|O	85006	...		...	...
		F1HT-18045-LB	O|O	85006	...		...	...
		F1HT-18045-RA	O|O	89402	...		...	...
		F1HT-18045-RB	O|O	89402	...		...	...
		F1HZ18124AA	O|O	83309	...		...	...
		F1HZ18124B	O|O	83308	...		...	...
		F1HZ18124C	O|O	89402	...		...	...
		F1HZ18124D	O|O	85006	...		...	...
		F1HZ18124E	O|O	85006	...		...	...
		F1HZ18124F	O|O	85006	...		...	...
		F1HZ18124G	O|O	85006	...		...	...
		F1HZ18124H	O|O	85040	...		...	...
		F1HZ18124J	O|O	83308	...		...	...
		F1HZ18124K	O|O	89402	...		...	...
		F1HZ-18124-AA	O|O	83309	...		...	...
		F1HZ-18124-B	O|O	83308	...		...	...
		F1HZ-18124-C	O|O	89402	...		...	...

APPLICATION GUIDE - TRUCKS, TRAILERS AND BUSES

Year Ano Année	Model Modelo Modle	OEM #		Front			Rear	
				Fleetline	GasSLX		Fleetline	GasSLX
FORD (CONT'D)								
	Models with O.E.M. Number	F1HZ-18124-D	O|O	**85006**	...		...	...
		F1HZ-18124-E	O|O	**85006**	...		...	...
		F1HZ-18124-F	O|O	**85006**	...		...	...
		F1HZ-18124-G	O|O	**85006**	...		...	...
		F1HZ-18124-H	O|O	**85040**	...		...	...
		F1HZ-18124-J	O|O	**83308**	...		...	...
		F1HZ-18124-K	O|O	**89402**	...		...	...
		F2HT18045DA	O|O	**85006**	...		...	...
		F2HT18080DA		...	...	O|O	**85712**	...
		F2HT-18045-DA	O|O	**85006**	...		...	...
		F2HT-18080-DA		...	...	O|O	**85712**	...
		F2HZ18124B	O|O	**85301**	...		...	...
		F2HZ18124C	O|O	**85006**	...		...	...
		F2HZ18124CA	O|O	**85006**	...		...	...
		F2HZ18125A		...	...	O|O	**85712**	...
		F2HZ18125AA		...	...	O|O	**85712**	...
		F2HZ-18124-B	O|O	**85301**	...		...	...
		F2HZ-18124-C	O|O	**85006**	...		...	...
		F2HZ-18124-CA	O|O	**85006**	...		...	...
		F2HZ-18125-A		...	...	O|O	**85712**	...
		F2HZ-18125-AA		...	...	O|O	**85712**	...
		F4TA18045TA	O|O	**G63455**	...		...	...
		F4TA18080PA		...	...	O|O	**G63461**	...
		F4TA-18045-TA	O|O	**G63455**	...		...	...
		F4TA-18080-PA		...	...	O|O	**G63461**	...
		F4TZ18124D	–|O	**G63414**	...		...	...
		F4TZ18124K	O|O	**G63455**	...		...	...
		F4TZ18125E		...	...	O|O	**G63461**	...
		F4TZ18125L		...	...	O|O	**G63406**	...
		F4TZ-18124-D	–|O	**G63414**	...		...	...
		F4TZ-18124-K	O|O	**G63455**	...		...	...
		F4TZ-18125-E		...	...	O|O	**G63461**	...
		F4TZ-18125-L		...	...	O|O	**G63406**	...
		F5HZ18124AA	O|O	**83314**	...		...	...
		F5HZ18124C	O|O	**85063**	...		...	...
		F5HZ18124DA	O|O	**83125**	...		...	...
		F5HZ18125A		...	...	O|O	**85314**	**89425**
		F5HZ18125AA		...	...	O|O	**85314**	**89425**
		F5HZ18125B		...	...	O|O	**85001**	**89410**
		F5HZ18125BA		...	...	O|O	**85001**	**89410**
		F5HZ-18124-AA	O|O	**83314**	...		...	...
		F5HZ-18124-C	O|O	**85063**	...		...	...
		F5HZ-18124-DA	O|O	**83125**	...		...	...
		F5HZ-18125-A		...	...	O|O	**85314**	**89425**
		F5HZ-18125-AA		...	...	O|O	**85314**	**89425**
		F5HZ-18125-B		...	...	O|O	**85001**	**89410**
		F5HZ-18125-BA		...	...	O|O	**85001**	**89410**
		F5TZ18124B	–|O	**G63608**	...		...	...
		F5TZ18125BC		...	...	–|O	**G63607**	...
		F5TZ-18124-B	–|O	**G63608**	...		...	...
		F5TZ-18125-BC		...	...	–|O	**G63607**	...
		F5UZ18124A	–|O	**G63622**	...		...	...
		F5UZ18124B	–|O	**G63622**	...		...	...
		F5UZ18125A		...	...	–|O	**G63623**	...
		F5UZ18125C		...	...	–|O	**G63624**	...

APPLICATION GUIDE - TRUCKS, TRAILERS AND BUSES

FORD (CONT'D)

Year Ano Année	Model Modelo Modle	OEM #		Front			Rear	
				Fleetline	GasSLX		Fleetline	GasSLX
	Models with O.E.M. Number	F5UZ-18124-A	−|O	G63622	...		...	...
		F5UZ-18124-B	−|O	G63622	...		...	...
		F5UZ-18125-A		...	...	−|O	G63623	...
		F5UZ-18125-C		...	...	−|O	G63624	...
		F6HT18045JB	O|O	89402	...		...	...
		F6HT18045JC	O|O	89402	...		...	...
		F6HT18045KA	O|O	89402	...		...	...
		F6HT18045MA	O|O	85006	...		...	...
		F6HT18080CA		...	...	O|O	85314	89425
		F6HT18080EA		...	...	O|O	85906	89407
		F6HT18080FC		...	...	O|O	85013	89414
		F6HT18124JC	O|O	89402	...		...	...
		F6HT18124KA	O|O	89402	...		...	...
		F6HT-18045-JB	O|O	89402	...		...	...
		F6HT-18045-JC	O|O	89402	...		...	...
		F6HT-18045-KA	O|O	89402	...		...	...
		F6HT-18045-MA	O|O	85006	...		...	...
		F6HT-18080-CA		...	...	O|O	85314	89425
		F6HT-18080-EA		...	...	O|O	85906	89407
		F6HT-18080-FC		...	...	O|O	85013	89414
		F6HT-18124-JC	O|O	89402	...		...	...
		F6HT-18124-KA	O|O	89402	...		...	...
		F6HZ18124B	O|O	83308	...		...	...
		F6HZ18124J	O|O	89402	...		...	...
		F6HZ18124KA	O|O	89402	...		...	...
		F6HZ18124MA	O|O	85006	...		...	...
		F6HZ18125A		...	...	O|O	85314	89425
		F6HZ18125JA		...	...	O|O	85305	...
		F6HZ-18124-B	O|O	83308	...		...	...
		F6HZ-18124-J	O|O	89402	...		...	...
		F6HZ-18124-KA	O|O	89402	...		...	...
		F6HZ-18124-MA	O|O	85006	...		...	...
		F6HZ-18125-A		...	...	O|O	85314	89425
		F6HZ-18125-JA		...	...	O|O	85305	...
		F7C2Z18124BR	−|O	G63929	...		...	...
		F7C2Z-18124-BR	−|O	G63929	...		...	...
		F7TA18045AA	−|O	G63608	...		...	...
		F7TA18080BA		...	...	−|O	G63607	...
		F7TA-18045-AA	−|O	G63608	...		...	...
		F7TA-18080-BA		...	...	−|O	G63607	...
		F57Z18125AC		...	...	−|O	G63679	...
		F57Z18125BB		...	...	−|O	G63679	...
		F57Z-18125-AC		...	...	−|O	G63679	...
		F57Z-18125-BB		...	...	−|O	G63679	...
		F77A18045AA	−|O	G63608	...		...	...
		F77A18080AA		...	...	−|O	G63679	...
		F77A18080BA		...	...	−|O	G63607	...
		F77A-18045-AA	−|O	G63608	...		...	...
		F77A-18080-AA		...	...	−|O	G63679	...
		F77A-18080-BA		...	...	−|O	G63607	...
		F77D18080BA		...	...	−|O	G63679	...
		F77D-18080-BA		...	...	−|O	G63679	...
		F81D18045CD		...	...	O|O	83209	89414
		F81D18080CD		...	...	O|O	83122	89406
		F81D-18045-CD		...	...	O|O	83209	89414

APPLICATION GUIDE - TRUCKS, TRAILERS AND BUSES

FORD (CONT'D)

Year Ano Année	Model Modelo Modle	OEM #		Front			Rear	
				Fleetline	GasSLX		Fleetline	GasSLX
	Models with O.E.M. Number	F81D-18080-CD		...	...	o|o	83122	89406
		F81Z18124AL	–|o	G63622	...		...	...
		F81Z18124BK	o|o	G63809	...		...	...
		F81Z18124CA		...	...	o|o	83209	89414
		F81Z18124PA	o|o	85928	...		...	...
		F81Z18125FA		...	...	o|o	83122	89406
		F81Z-18124-AL	–|o	G63622	...		...	...
		F81Z-18124-BK	o|o	G63809	...		...	...
		F81Z-18124-CA		...	...	o|o	83209	89414
		F81Z-18124-PA	o|o	85928	...		...	...
		F81Z-18125-FA		...	...	o|o	83122	89406
		F87A18045AH	–|–	G63772	...		...	...
		F87A18045CC	–|–	G63678	...		...	...
		F87A18045JA	–|–	G63678	...		...	...
		F87A18080AC		...	...	o|o	G63773	...
		F87A18080BC		...	...	o|o	G63773	...
		F87A-18045-AH	–|–	G63772	...		...	...
		F87A-18045-CC	–|–	G63678	...		...	...
		F87A-18045-JA	–|–	G63678	...		...	...
		F87A-18080-AC		...	...	o|o	G63773	...
		F87A-18080-BC		...	...	o|o	G63773	...
		F87Z18124AA	–|–	G63772	...		...	...
		F87Z18124CA	–|–	G63678	...		...	...
		F87Z18124JA	–|–	G63678	...		...	...
		F87Z18125AA		...	...	o|o	G63773	...
		F87Z18125BA		...	...	o|o	G63773	...
		F87Z18125CA		...	...	o|o	G63773	...
		F87Z18125RA		...	...	o|o	G63775	...
		F87Z-18124-AA	–|–	G63772	...		...	...
		F87Z-18124-CA	–|–	G63678	...		...	...
		F87Z-18124-JA	–|–	G63678	...		...	...
		F87Z-18125-AA		...	...	o|o	G63773	...
		F87Z-18125-BA		...	...	o|o	G63773	...
		F87Z-18125-CA		...	...	o|o	G63773	...
		F87Z-18125-RA		...	...	o|o	G63775	...
		TACAA18045A	o|o	83216	...		...	...
		TACAA-18045-A	o|o	83216	...		...	...
		TANNA18045A	o|o	83312	89409		...	...
		TANNA-18045-A	o|o	83312	89409		...	...
		TDBA18045A	o|o	83219	...		...	...
		TDBA18045B	o|o	83219	...		...	...
		TDBA-18045-A	o|o	83219	...		...	...
		TDBA-18045-B	o|o	83219	...		...	...
		TDBE18045A	o|o	83219	...		...	...
		TDBE-18045-A	o|o	83219	...		...	...
		TFAA18045B	o|o	83219	...		...	...
		TFAA18045C	o|o	83219	...		...	...
		TFAA18080A		...	...	o|o	85307	...
		TFAA-18045-B	o|o	83219	...		...	...
		TFAA-18045-C	o|o	83219	...		...	...
		TFAA-18080-A		...	...	o|o	85307	...
		THAB18045A	o|o	83219	...		...	...
		THAB18045B	o|o	83219	...		...	...
		THAB-18045-A	o|o	83219	...		...	...
		THAB-18045-B	o|o	83219	...		...	...

APPLICATION GUIDE - TRUCKS, TRAILERS AND BUSES

Year Ano Année	Model Modelo Modle	OEM #		Front			Rear	
				Fleetline	GasSLX		Fleetline	GasSLX
FORD (CONT'D)								
	Models with O.E.M. Number	TQSH18045A	O|O	**83309**	...		...	...
		TQSH-18045-A	O|O	**83309**	...		...	...
		XC45-18045-AA	O|O	**83216**	...		...	...
		XC4518045AA	O|O	**83216**	...		...	...
		XL2Z18124BA	–|–	**G63678**	...		...	...
		XL2Z18124EA	–|–	**G63678**	...		...	...
		XL2Z18124JA	–|–	**G63678**	...		...	...
		XL2Z18125BA		...	...	–|O	**G63679**	...
		XL2Z18125CA		...	...	–|O	**G63679**	...
		XL2Z18125EA		...	...	–|O	**G63679**	...
		XL2Z-18124-BA	–|–	**G63678**	...		...	...
		XL2Z-18124-EA	–|–	**G63678**	...		...	...
		XL2Z-18124-JA	–|–	**G63678**	...		...	...
		XL2Z-18125-BA		...	...	–|O	**G63679**	...
		XL2Z-18125-CA		...	...	–|O	**G63679**	...
		XL2Z-18125-EA		...	...	–|O	**G63679**	...
		XL5Z18125AA		...	...	O|O	**G63773**	...
		XL5Z-18125-AA		...	...	O|O	**G63773**	...
		XL24-18045-BA	–|–	**G63678**	...		...	...
		XL24-18045-EA	–|–	**G63678**	...		...	...
		XL24-18045-JA	–|–	**G63678**	...		...	...
		XL24-18080-BA		...	...	–|O	**G63679**	...
		XL24-18080-CA		...	...	–|O	**G63679**	...
		XL24-18080-EA		...	...	–|O	**G63679**	...
		XL58-18080-AC		...	...	O|O	**G63773**	...
		XL2418045BA	–|–	**G63678**	...		...	...
		XL2418045EA	–|–	**G63678**	...		...	...
		XL2418045JA	–|–	**G63678**	...		...	...
		XL2418080BA		...	...	–|O	**G63679**	...
		XL2418080CA		...	...	–|O	**G63679**	...
		XL2418080EA		...	...	–|O	**G63679**	...
		XL5818080AC		...	...	O|O	**G63773**	...
		YL5Z18124AA	–|–	**G63772**	...		...	...
		YL5Z-18124-AA	–|–	**G63772**	...		...	...
PICKUP, F-450 SUPERDUTY								
99-07	Models with single or dual rear wheels with 165" or 201" wheel base	ASH247		...	...	O|O	**G63461**	...
		ASH23486		...	...	O|O	**G63461**	...
		ASH23488		...	...	O|O	**G63461**	...
		ASH-247		...	...	O|O	**G63461**	...
		ASH-23486		...	...	O|O	**G63461**	...
		ASH-23488		...	...	O|O	**G63461**	...
		AT610		...	...	O|O	**G63461**	...
		AT611		...	...	O|O	**G63461**	...
		AT-610		...	...	O|O	**G63461**	...
		AT-611		...	...	O|O	**G63461**	...
		F81A18080DCA		...	...	O|O	**G63461**	...
		F81A-18080-DCA		...	...	O|O	**G63461**	...
		F81Z18125DC		...	...	O|O	**G63461**	...
		F81Z-18125-DC		...	...	O|O	**G63461**	...
PICKUP, F-550 SUPERDUTY								
99-07	Models with single or dual rear wheels with 165" or 201" wheel base	ASH247		...	...	O|O	**G63461**	...
		ASH23486		...	...	O|O	**G63461**	...
		ASH23488		...	...	O|O	**G63461**	...
		ASH-247		...	...	O|O	**G63461**	...

APPLICATION GUIDE - TRUCKS, TRAILERS AND BUSES

Year Ano Année	Model Modelo Modle	OEM #		Front			Rear	
				Fleetline	GasSLX		Fleetline	GasSLX
FORD (CONT'D)								
PICKUP, F-550 SUPERDUTY (cont'd)								
99-07	Models with single or dual rear wheels with 165" or 201" wheel base	ASH-23486		...	...		G63461	...
		ASH-23488		...	...		G63461	...
		AT610		...	...		G63461	...
		AT611		...	...		G63461	...
		AT-610		...	...		G63461	...
		AT-611		...	...		G63461	...
		F81A18080DCA		...	...		G63461	...
		F81A-18080-DCA		...	...		G63461	...
		F81Z18125DC		...	...		G63461	...
		F81Z-18125-DC		...	...		G63461	...
T-SERIES - CONVENTIONAL TANDEM								
64-69	T-750, T-800, T-850, T-900, T-950 with 6000, 7000, 9000, 11000, 12000, 15000, 18000 lb. Axles	C1TT18045D		G63406	...		...	...
		C1TT-18045-D		G63406	...		...	...
64-69	T-750, T-800, T-850, T-900, T-950 with 9000 thru 15000 lb. Axles	C1TT18045E		83314	...		...	...
		C1TT-18045-E		83314	...		...	...
		C6PF18077DN		83314	...		...	...
		C6PF-18077-DN		83314	...		...	...
VAN 1 TON, ECONOLINE / CLUB WAGON / SUPERDUTY								
03-19	Type A School bus and Type C Motorhomes with Ford E450 Chassis	8C2Z18124D		G63622	...		...	...
		8C2Z18125A		...	...		G63623	...
		8C2Z18125B		...	...		G63623	...
		8C2Z18125C		...	...		G63623	...
		8C2Z18125D		...	...		G63623	...
		8C2Z-18124-D		G63622	...		...	...
		8C2Z-18125-A		...	...		G63623	...
		8C2Z-18125-B		...	...		G63623	...
		8C2Z-18125-C		...	...		G63623	...
		8C2Z-18125-D		...	...		G63623	...
		8C24-18045-DA		G63622	...		...	...
		8C24-18080-DB		...	...		G63623	...
		8C2418045DA		G63622	...		...	...
		8C2418080DB		...	...		G63623	...
		ASH1136		...	...		G63623	...
		ASH1154		G63622	...		...	...
		ASH-1136		...	...		G63623	...
		ASH-1154		G63622	...		...	...
		AT163G		G63622	...		...	...
		AT164G		...	...		G63623	...
		AT-163G		G63622	...		...	...
		AT-164G		...	...		G63623	...
99-19	Type A School bus and Type C Motorhomes with Ford E350 Chassis	8C2Z18124D		G63622	...		...	...
		8C2Z18125A		...	...		G63623	...
		8C2Z18125B		...	...		G63623	...
		8C2Z18125C		...	...		G63623	...
		8C2Z18125D		...	...		G63623	...
		8C2Z-18124-D		G63622	...		...	...
		8C2Z-18125-A		...	...		G63623	...
		8C2Z-18125-B		...	...		G63623	...
		8C2Z-18125-C		...	...		G63623	...
		8C2Z-18125-D		...	...		G63623	...
		8C24-18045-DA		G63622	...		...	...

FORD (CONT'D)

VAN 1 TON, ECONOLINE / CLUB WAGON / SUPERDUTY (cont'd)

Year Ano Année	Model Modelo Modle	OEM #	Front Fleetline	Front GasSLX	Rear Fleetline	Rear GasSLX
99-19	Type A School bus and Type C Motorhomes with Ford E350 Chassis	8C24-18080-DB	...	...	G63623	...
		8C2418045DA	G63622	...	...	...
		8C2418080DB	...	...	G63623	...
		ASH1136	...	...	G63623	...
		ASH1154	G63622	...	...	...
		ASH-1136	...	...	G63623	...
		ASH-1154	G63622	...	...	...
		AT163G	G63622	...	...	...
		AT164G	...	...	G63623	...
		AT-163G	G63622	...	...	...
		AT-164G	...	...	G63623	...
21-23	Type A School bus and Type C Motorhomes with Ford E350 Chassis	8C2Z18124D	G63622	...	...	...
		8C2Z18125A	...	...	G63623	...
		8C2Z18125B	...	...	G63623	...
		8C2Z18125C	...	...	G63623	...
		8C2Z18125D	...	...	G63623	...
		8C2Z-18124-D	G63622	...	...	...
		8C2Z-18125-A	...	...	G63623	...
		8C2Z-18125-B	...	...	G63623	...
		8C2Z-18125-C	...	...	G63623	...
		8C2Z-18125-D	...	...	G63623	...
		8C24-18045-DA	G63622	...	...	...
		8C24-18080-DB	...	...	G63623	...
		8C2418045DA	G63622	...	...	...
		8C2418080DB	...	...	G63623	...
		ASH1136	...	...	G63623	...
		ASH1154	G63622	...	...	...
		ASH-1136	...	...	G63623	...
		ASH-1154	G63622	...	...	...
		AT163G	G63622	...	...	...
		AT164G	...	...	G63623	...
		AT-163G	G63622	...	...	...
		AT-164G	...	...	G63623	...
21-23	Type A School bus and Type C Motorhomes with Ford E450 Chassis	8C2Z18124D	G63622	...	...	...
		8C2Z18125A	...	...	G63623	...
		8C2Z18125B	...	...	G63623	...
		8C2Z18125C	...	...	G63623	...
		8C2Z18125D	...	...	G63623	...
		8C2Z-18124-D	G63622	...	...	...
		8C2Z-18125-A	...	...	G63623	...
		8C2Z-18125-B	...	...	G63623	...
		8C2Z-18125-C	...	...	G63623	...
		8C2Z-18125-D	...	...	G63623	...
		8C24-18045-DA	G63622	...	...	...
		8C24-18080-DB	...	...	G63623	...
		8C2418045DA	G63622	...	...	...
		8C2418080DB	...	...	G63623	...
		ASH1136	...	...	G63623	...
		ASH1154	G63622	...	...	...
		ASH-1136	...	...	G63623	...
		ASH-1154	G63622	...	...	...
		AT163G	G63622	...	...	...
		AT164G	...	...	G63623	...
		AT-163G	G63622	...	...	...

APPLICATION GUIDE - TRUCKS, TRAILERS AND BUSES

Year Ano Année	Model Modelo Modle	OEM #		Front			Rear	
				Fleetline	GasSLX		Fleetline	GasSLX
FORD (CONT'D)								
VAN 1 TON, ECONOLINE / CLUB WAGON / SUPERDUTY (cont'd)								
21-23	Type A School bus and Type C Motorhomes with Ford E450 Chassis	AT-164G		...	...	−|○	G63623	...
W AND WT SERIES - HI TILT CAB HIGHWAY TRACTOR								
66-71	W-900, W-950,W-1000, WT-900, WT-950, WT-1000 with 11000 lb. Axle	D2HA18045E1A	○|○	85304	...		...	...
		D2HA18045E1B	○|○	85304	...		...	...
		D2HA18045E2A	○|○	85304	...		...	...
		D2HA18045E2B	○|○	85304	...		...	...
		D2HA-18045-E1A	○|○	85304	...		...	...
		D2HA-18045-E1B	○|○	85304	...		...	...
		D2HA-18045-E2A	○|○	85304	...		...	...
		D2HA-18045-E2B	○|○	85304	...		...	...
66-77	W-900, W-950,W-1000, WT-900, WT-950, WT-1000 with 12000 & 15000 lb. Axle	C6TA18045Y	○|○	85301	...		...	...
		C6TA18045Z	○|○	85301	...		...	...
		C6TA-18045-Y	○|○	85301	...		...	...
		C6TA-18045-Z	○|○	85301	...		...	...
73-77	W-900, WT-900 with Air Suspension	D2HZ18080A		...	...	○|○	83209	89414
		D2HZ-18080-A		...	...	○|○	83209	89414
		D4HA18080AA		...	...	○|○	83209	89414
		D4HA-18080-AA		...	...	○|○	83209	89414
FOREST RIVER								
ALL AMERICAN								
	MotorHomes with Ford E350 or E450 Chassis	8C2Z18124D	−|○	G63622	...		...	...
		8C2Z18125D		...	...	−|○	G63623	...
		8C2Z-18124-D	−|○	G63622	...		...	...
		8C2Z-18125-D		...	...	−|○	G63623	...
		8C24-18045-DA	−|○	G63622	...		...	...
		8C24-18080-DB		...	...	−|○	G63623	...
		8C2418045DA	−|○	G63622	...		...	...
		8C2418080DB		...	...	−|○	G63623	...
		ASH1136		...	...	−|○	G63623	...
		ASH1154	−|○	G63622	...		...	...
		ASH-1136		...	...	−|○	G63623	...
		ASH-1154	−|○	G63622	...		...	...
		AT163G	−|○	G63622	...		...	...
		AT164G		...	...	−|○	G63623	...
		AT-163G	−|○	G63622	...		...	...
		AT-164G		...	...	−|○	G63623	...
CLASS A MOTORHOMES								
	MotorHomes with Workhorse UFO Chassis with Hendrickson Softek Front Suspension	66153-002	○|○	83124	89407		...	...
		66153002	○|○	83124	89407		...	...
		F4BE5C832MO	○|○	83124	89407		...	...
		F4-BE5-C832-MO	○|○	83124	89407		...	...
FORESTER								
04-20	MotorHomes with Ford E350 or E450 Chassis	8C2Z18124D	−|○	G63622	...		...	...
		8C2Z18125D		...	...	−|○	G63623	...
		8C2Z-18124-D	−|○	G63622	...		...	...
		8C2Z-18125-D		...	...	−|○	G63623	...
		8C24-18045-DA	−|○	G63622	...		...	...
		8C24-18080-DB		...	...	−|○	G63623	...

FOREST RIVER (CONT'D)

FORESTER (cont'd)

Year Ano Année	Model Modelo Modle	OEM #	Front		Rear	
			Fleetline	GasSLX	Fleetline	GasSLX
04-20	MotorHomes with Ford E350 or E450 Chassis	8C2418045DA	G63622	...	...	...
		8C2418080DB	...	...	G63623	...
		ASH1136	...	...	G63623	...
		ASH1154	G63622	...	...	...
		ASH-1136	...	...	G63623	...
		ASH-1154	G63622	...	...	...
		AT163G	G63622	...	...	...
		AT164G	...	...	G63623	...
		AT-163G	G63622	...	...	...
		AT-164G	...	...	G63623	...

FORESTER GTS

15-18	MotorHomes with Ford E350 or E450 Chassis	8C2Z18124D	G63622	...	...	...
		8C2Z18125D	...	...	G63623	...
		8C2Z-18124-D	G63622	...	...	...
		8C2Z-18125-D	...	...	G63623	...
		8C24-18045-DA	G63622	...	...	...
		8C24-18080-DB	...	...	G63623	...
		8C2418045DA	G63622	...	...	...
		8C2418080DB	...	...	G63623	...
		ASH1136	...	...	G63623	...
		ASH1154	G63622	...	...	...
		ASH-1136	...	...	G63623	...
		ASH-1154	G63622	...	...	...
		AT163G	G63622	...	...	...
		AT164G	...	...	G63623	...
		AT-163G	G63622	...	...	...
		AT-164G	...	...	G63623	...

GEORGETOWN

08-17	MotorHomes with Ford F53 Chassis with 16,000 lb GVW to 22,000 lb GVW	1C34-18045-AA	83209	89414	...	...
		1C34-18045-JA	83209	89414	...	...
		1C3418045AA	83209	89414	...	...
		1C3418045JA	83209	89414	...	...
		9U9Z18124A	83209	89414	...	...
		9U9Z18125A	...	...	83122	89406
		9U9Z-18124-A	83209	89414	...	...
		9U9Z-18125-A	...	...	83122	89406
		9U94-18045-AA	83209	89414	...	...
		9U94-18080-AA	...	...	83122	89406
		9U9418045AA	83209	89414	...	...
		9U9418080AA	...	...	83122	89406
		ASH137	...	...	83122	89406
		ASH294	83209	89414	...	...
		ASH1022	83209	89414	...	...
		ASH1023	...	...	83122	89406
		ASH1205	83209	89414	...	...
		ASH1206	...	...	83122	89406
		ASH1228	83209	89414	...	...
		ASH1229	83209	89414	...	...
		ASH1230	...	...	83122	89406
		ASH25822	83209	89414	...	...
		ASH25823	83209	89414	...	...
		ASH25824	...	...	83122	89406

APPLICATION GUIDE - TRUCKS, TRAILERS AND BUSES

Year Ano Année	Model Modelo Modle	OEM #		Front			Rear	
				Fleetline	GasSLX		Fleetline	GasSLX

FOREST RIVER (CONT'D)

GEORGETOWN (cont'd)

08-17	MotorHomes with Ford F53 Chassis with 16,000 lb GVW to 22,000 lb GVW	ASH-137		...	...	○|○	83122	89406
		ASH-294	○|○	83209	89414		...	...
		ASH-1022	○|○	83209	89414		...	...
		ASH-1023		...	...	○|○	83122	89406
		ASH-1205	○|○	83209	89414		...	...
		ASH-1206		...	...	○|○	83122	89406
		ASH-1228	○|○	83209	89414		...	...
		ASH-1229	○|○	83209	89414		...	...
		ASH-1230		...	...	○|○	83122	89406
		ASH-25822	○|○	83209	89414		...	...
		ASH-25823	○|○	83209	89414		...	...
		ASH-25824		...	...	○|○	83122	89406
		AT620	○|○	83209	89414		...	...
		AT621		...	...	○|○	83122	89406
		AT766	○|○	83209	89414		...	...
		AT-620	○|○	83209	89414		...	...
		AT-621		...	...	○|○	83122	89406
		AT-766	○|○	83209	89414		...	...

LEXINGTON

03-15	MotorHomes with Ford E350 or E450 Chassis	8C2Z18124D	–|○	G63622	...		...	...
		8C2Z18125D		...	...	–|○	G63623	...
		8C2Z-18124-D	–|○	G63622	...		...	...
		8C2Z-18125-D		...	...	–|○	G63623	...
		8C24-18045-DA	–|○	G63622	...		...	...
		8C24-18080-DB		...	...	–|○	G63623	...
		8C2418045DA	–|○	G63622	...		...	...
		8C2418080DB		...	...	–|○	G63623	...
		ASH1136		...	...	–|○	G63623	...
		ASH1154	–|○	G63622	...		...	...
		ASH-1136		...	...	–|○	G63623	...
		ASH-1154	–|○	G63622	...		...	...
		AT163G	–|○	G63622	...		...	...
		AT164G		...	...	–|○	G63623	...
		AT-163G	–|○	G63622	...		...	...
		AT-164G		...	...	–|○	G63623	...

REFLECTION

02-04	MotorHomes with Freightliner XC Chassis & ADL200 Suspension w/ 20K Rear	16-16736-000		...	...	○|○	85029	...
		16-16873-000		...	...	○|○	85029	...
		1616736000		...	...	○|○	85029	...
		1616873000		...	...	○|○	85029	...
		141700131809		...	...	○|○	85029	...
02-04	MotorHomes with Freightliner XC Chassis and AS120 Front Suspension	16-16737-000	○|○	83160	...		...	...
		16-16874-000	○|○	83160	...		...	...
		1616737000	○|○	83160	...		...	...
		1616874000	○|○	83160	...		...	...
		141700131810	○|○	83160	...		...	...
02-04	MotorHomes with Freightliner XC ChassisZF & IFS Front Suspension with 23,000 lb GVW or Greater	16-18103-000	–|–	85900	...		...	...
		1618103000	–|–	85900	...		...	...
		481700000493	–|–	85900	...		...	...

SUNSEEKER

99-22	MotorHomes with Ford E350 or E450 Chassis	8C2Z18124D	–|○	G63622	...		...	...

APPLICATION GUIDE - TRUCKS, TRAILERS AND BUSES

Year Ano Année	Model Modelo Modle	OEM #		Front			Rear	
				Fleetline	GasSLX		Fleetline	GasSLX
FOREST RIVER (CONT'D)								
SUNSEEKER (cont'd)								
99-22	MotorHomes with Ford E350 or E450 Chassis	8C2Z18125D		...	...		G63623	...
		8C2Z-18124-D		G63622	...		...	...
		8C2Z-18125-D		...	...		G63623	...
		8C24-18045-DA		G63622	...		...	...
		8C24-18080-DB		...	...		G63623	...
		8C2418045DA		G63622	...		...	...
		8C2418080DB		...	...		G63623	...
		ASH1136		...	...		G63623	...
		ASH1154		G63622	...		...	...
		ASH-1136		...	...		G63623	...
		ASH-1154		G63622	...		...	...
		AT163G		G63622	...		...	...
		AT164G		...	...		G63623	...
		AT-163G		G63622	...		...	...
		AT-164G		...	...		G63623	...
SUNSEEKER GTS								
15-20	MotorHomes with Ford E350 or E450 Chassis	8C2Z18124D		G63622	...		...	...
		8C2Z18125D		...	...		G63623	...
		8C2Z-18124-D		G63622	...		...	...
		8C2Z-18125-D		...	...		G63623	...
		8C24-18045-DA		G63622	...		...	...
		8C24-18080-DB		...	...		G63623	...
		8C2418045DA		G63622	...		...	...
		8C2418080DB		...	...		G63623	...
		ASH1136		...	...		G63623	...
		ASH1154		G63622	...		...	...
		ASH-1136		...	...		G63623	...
		ASH-1154		G63622	...		...	...
		AT163G		G63622	...		...	...
		AT164G		...	...		G63623	...
		AT-163G		G63622	...		...	...
		AT-164G		...	...		G63623	...
TSUNAMI								
02-06	MotorHomes with Freightliner XC Chassis & ADL200 Suspension w/ 20K Rear	16-16736-000		...	...		85029	...
		16-16873-000		...	...		85029	...
		1616736000		...	...		85029	...
		1616873000		...	...		85029	...
		141700131809		...	...		85029	...
02-06	MotorHomes with Freightliner XC Chassis and AS120 Front Suspension	16-16737-000		83160	...		...	...
		16-16874-000		83160	...		...	...
		1616737000		83160	...		...	...
		1616874000		83160	...		...	...
		141700131810		83160	...		...	...
02-06	MotorHomes with Freightliner XC ChassisZF & IFS Front Suspension with 23,000 lb GVW or Greater	16-18103-000		85900	...		...	...
		1618103000		85900	...		...	...
		481700000493		85900	...		...	...
FREIGHTLINER								
108SD								
12-19	Models with FAS II (40,000 lb) Rear Air Suspension	16-15817-000		...	...		85724	89443

FREIGHTLINER (CONT'D)

108SD (cont'd)

Year Ano Année	Model Modelo Modle	OEM #	Front Fleetline	Front GasSLX	Rear Fleetline	Rear GasSLX
12-19	Models with FAS II (40,000 lb) Rear Air Suspension	16-18708-000	...	...	85724	89443
		680611	...	...	85724	89443
		1615817000	...	...	85724	89443
		1618708000	...	...	85724	89443
		471700002809	...	...	85724	89443
		481700006848	...	...	85724	89443
		SDA471700002809	...	...	85724	89443
12-22	All Models with 12,000 to16,000 lb. Front Axle and Taperleaf Spring	10-13760-000	85959	...	...	...
		1013760000	85959	...	...	...
		471700002991	85959	...	...	...
		SDA471700002991	85959	...	...	...
12-22	Day Cab Models with Spring Suspensions	18-47350-000	83040			
		18-60766-000	83040			
		1847350000	83040			
		1860766000	83040			
		814903003482	83040			
12-23	Models with Freightliner TufTrac Rear Air Suspension	16-15770-000	...	...	85956	...
		1615770000	...	...	85956	...
		481700125969	...	...	85956	...
12-23	Models with Hendrickson HMX 400/460 Haulmax with 16.5" Saddle	60680-004	...	...	83143	...
		60680-004L	...	...	83143	...
		60680004	...	...	83143	...
		60680004L	...	...	83143	...
		H60680004	...	...	83143	...
12-23	Models with Hendrickson HMX 400/460 Haulmax with 17.5" & 18.5" Saddle	60680-005	...	...	83142	...
		60680-005L	...	...	83142	...
		60680005	...	...	83142	...
		60680005L	...	...	83142	...
		HDR60680-005	...	...	83142	...
		HDR60680005	...	...	83142	...

114SD

Year Ano Année	Model Modelo Modle	OEM #	Front Fleetline	Front GasSLX	Rear Fleetline	Rear GasSLX
12-21	Models with FAS II (40,000 lb) Rear Air Suspension	16-15817-000	...	...	85724	89443
		16-18708-000	...	...	85724	89443
		680611	...	...	85724	89443
		1615817000	...	...	85724	89443
		1618708000	...	...	85724	89443
		471700002809	...	...	85724	89443
		481700006848	...	...	85724	89443
		SDA471700002809	...	...	85724	89443
12-22	All Models with 18,000 lb Flat Leaf Spring	471700000470	85918	89449	...	...
12-23	All Models with 18,000 lb Flat Leaf Spring	10-13684-000	85918	89449	...	...
		1013684000	85918	89449	...	...
12-23	All Models with 12000 lb to 20000 lb Set-Back Front Axle	10-13809-000	85958	...	...	...
		1013809000	85958	...	...	...
		SDA471700003920	85958	...	...	...
12-23	Day Cab Models with Spring Suspensions	18-47350-000	83040			
		18-60766-000	83040			
		1847350000	83040			
		1860766000	83040			
		814903003482	83040			
12-23	Models with Freightliner TufTrac Rear Air Suspension	16-15770-000	...	...	85956	...
		1615770000	...	...	85956	...
		481700125969	...	...	85956	...

APPLICATION GUIDE - TRUCKS, TRAILERS AND BUSES

Year Ano Année	Model Modelo Modle	OEM #		Front			Rear	
				Fleetline	GasSLX		Fleetline	GasSLX
FREIGHTLINER (CONT'D)								
114SD (cont'd)								
12-23	Models with Hendrickson HMX 400/460 Haulmax with 16.5" Saddle	60680-004		...	...		83143	...
		60680-004L		...	...		83143	...
		60680004		...	...		83143	...
		60680004L		...	...		83143	...
		H60680004		...	...		83143	...
		HDR60680-004		...	...		83143	...
		HDR60680004		...	...		83143	...
12-23	Models with Hendrickson HMX 400/460 Haulmax with 17.5" & 18.5" Saddle	60680-005		...	...		83142	...
		60680-005L		...	...		83142	...
		60680005		...	...		83142	...
		60680005L		...	...		83142	...
		HDR60680-005		...	...		83142	...
		HDR60680005		...	...		83142	...
122SD								
13-16	Crew Cab Models with O.E.M. Number	18-60764-000	○|○	83038				
		1860764000	○|○	83038				
13-16	Models with O.E.M. Number	18-60764-000	○|○	83038				
		1860764000	○|○	83038				
13-21	Models with FAS II (40,000 lb) Rear Air Suspension	16-15817-000		...	...	○|○	85724	89443
		16-18708-000		...	...	○|○	85724	89443
		680611		...	...	○|○	85724	89443
		1615817000		...	...	○|○	85724	89443
		1618708000		...	...	○|○	85724	89443
		471700002809		...	...	○|○	85724	89443
		481700006848		...	...	○|○	85724	89443
		SDA471700002809		...	...	○|○	85724	89443
17-21	Models with O.E.M. Number	18-69674-000	○|○	83906				
		1869674000	○|○	83906				
		814903015188	○|○	83906				
13-22	All Models with 12000 lb to 20000 lb Set-Back Front Axle	10-13809-000	○|○	85958	...		...	...
		1013809000	○|○	85958	...		...	...
		SDA471700003920	○|○	85958	...		...	...
13-23	Models with Freightliner TufTrac Rear Air Suspension	16-15770-000		...	...	○|○	85956	...
		1615770000		...	...	○|○	85956	...
		481700125969		...	...	○|○	85956	...
13-23	Models with Hendrickson HMX 400/460 Haulmax with 16.5" Saddle	60680-004		...	...		83143	...
		60680-004L		...	...		83143	...
		60680004		...	...		83143	...
		60680004L		...	...		83143	...
		H60680004		...	...		83143	...
13-23	Models with Hendrickson HMX 400/460 Haulmax with 17.5" & 18.5" Saddle	60680-005		...	...		83142	...
		60680-005L		...	...		83142	...
		60680005		...	...		83142	...
		60680005L		...	...		83142	...
		HDR60680-005		...	...		83142	...
		HDR60680005		...	...		83142	...
ARGOSY								
00-06	Models with O.E.M. Number	18-37813-000	○|○	83044				
		1837813000	○|○	83044				
99-15	Models with 12000 lb Taperleaf Front Suspension	10-12703-000	○|○	85918	89449		...	...
		10-13634-000	○|○	85918	89449		...	...
		1012703000	○|○	85918	89449		...	...

Year Ano Année	Model Modelo Modle	OEM #		Front			Rear	
				Fleetline	GasSLX		Fleetline	GasSLX
FREIGHTLINER (CONT'D)								
ARGOSY (cont'd)								
99-15	Models with 12000 lb Taperleaf Front Suspension	1013634000	○|○	**85918**	**89449**		...	...
		471700000449	○|○	**85918**	**89449**		...	...
99-15	Models with FAS II (40,000 lb) Rear Air Suspension	16-13957-000		...	...	○|○	**85724**	**89443**
		16-15817-000		...	...	○|○	**85724**	**89443**
		680339		...	...	○|○	**85724**	**89443**
		680611		...	...	○|○	**85724**	**89443**
		1613957000		...	...	○|○	**85724**	**89443**
		1615817000		...	...	○|○	**85724**	**89443**
99-15	Models with Freightliner Low Profile Rear Air Suspension (18,000 to 40,000 lb)	16-14259-000		...	...	○|○	**85331**	...
		16-18706-000		...	...	○|○	**85331**	...
		680511		...	...	○|○	**85331**	...
		1614259000		...	...	○|○	**85331**	...
		1618706000		...	...	○|○	**85331**	...
		471700002992		...	...	○|○	**85331**	...
99-15	Models with Rear 10000 lb - 15000 lb Low Profile AirLiner	16-16577-000		...	...	○|○	**85335**	...
		16-18711-000		...	...	○|○	**85335**	...
		1616577000		...	...	○|○	**85335**	...
		1618711000		...	...	○|○	**85335**	...
		471700002996		...	...	○|○	**85335**	...
B2								
05-22	Models with 15,000 lb Rear Suspension	6803260000		...	...		**83120**	...
05-23	Models with 12000 lb Taperleaf Front Suspension	10-13211-000	○|○	**85918**	**89449**		...	...
		10-13634-000	○|○	**85918**	**89449**		...	...
		1013211000	○|○	**85918**	**89449**		...	...
		1013634000	○|○	**85918**	**89449**		...	...
05-23	Models with FAS II (40,000 lb) Rear Air Suspension	16-13957-000		...	...	○|○	**85724**	**89443**
		16-15817-000		...	...	○|○	**85724**	**89443**
		16-18708-000		...	...	○|○	**85724**	**89443**
		680611		...	...	○|○	**85724**	**89443**
		1613957000		...	...	○|○	**85724**	**89443**
		1615817000		...	...	○|○	**85724**	**89443**
		1618708000		...	...	○|○	**85724**	**89443**
		471700002809		...	...	○|○	**85724**	**89443**
		481700006848		...	...	○|○	**85724**	**89443**
		SDA471700002809		...	...	○|○	**85724**	**89443**
CASCADIA								
09-17	113 Models with 12000 to 13300 lb Taperleaf Front Suspension	10-13809-000	○|○	**85958**	...		...	...
		1013809000	○|○	**85958**	...		...	...
		SDA471700003920	○|○	**85958**	...		...	...
09-19	Models with 72" High-Roof Sleeper and 1/2" Top mounting bolt	18-41762-000	○|○	**83038**				
		18-60764-000	○|○	**83038**				
		1841762000	○|○	**83038**				
		1860764000	○|○	**83038**				
		814903003528	○|○	**83038**				
09-20	125 Models with 12000 to 13300 lb Taperleaf Front Suspension	10-13809-000	○|○	**85958**	...		...	...
		1013809000	○|○	**85958**	...		...	...
		SDA471700003920	○|○	**85958**	...		...	...
18-20	113 Models with 12000 to 13300 lb Taperleaf Front Suspension	10-14193-000	○|○	**83396**	...		...	...
		10-14282-000	○|○	**83396**	...		...	...
		10-14317-000	○|○	**83396**	...		...	...
		1014193000	○|○	**83396**	...		...	...
		1014282000	○|○	**83396**	...		...	...

FREIGHTLINER (CONT'D)

CASCADIA (cont'd)

Year Ano Année	Model Modelo Modle	OEM #		Front			Rear	
				Fleetline	GasSLX		Fleetline	GasSLX
18-20	113 Models with 12000 to 13300 lb Taperleaf Front Suspension	1014317000	O|O	83396	...		...	...
		A90193	O|O	83396	...		...	...
		X9007009-73	O|O	83396	...		...	...
17-21	Day Cab and Sleeper cabs w/OEM Number and 12 mm Top mounting bolt	18-67845-000	O|O	83906				
		18-69674-000	O|O	83906				
		1867845000	O|O	83906				
		1869674000	O|O	83906				
		814903012666	O|O	83906				
		814903015188	O|O	83906				
18-21	116 Models with 12000 to 13300 lb Taperleaf Front Suspension	10-14193-000	O|O	83396	...		...	...
		10-14282-000	O|O	83396	...		...	...
		10-14317-000	O|O	83396	...		...	...
		1014193000	O|O	83396	...		...	...
		1014282000	O|O	83396	...		...	...
		1014317000	O|O	83396	...		...	...
		A90193	O|O	83396	...		...	...
		X9007009-73	O|O	83396	...		...	...
18-21	126 Models with 12000 to 13300 lb Taperleaf Front Suspension	1014282000	O|O	83396	...		...	...
09-22	Models with Hendrickson Front Airtek	58913-003	O|O	85932	89453		...	...
		58913-003L	O|O	85932	89453		...	...
		58913-012	O|O	85932	89453		...	...
		58913-012L	O|O	85932	89453		...	...
		58913003	O|O	85932	89453		...	...
		58913003L	O|O	85932	89453		...	...
		58913012	O|O	85932	89453		...	...
		58913012L	O|O	85932	89453		...	...
		471700006269	O|O	85932	89453		...	...
		471700131331	O|O	85932	89453		...	...
08-23	Models with FAS II (40,000 lb) Rear Air Suspension	16-15817-000		...	...	O|O	85724	89443
		16-18708-000		...	...	O|O	85724	89443
		680611		...	...	O|O	85724	89443
		1615817000		...	...	O|O	85724	89443
		1618708000		...	...	O|O	85724	89443
		471700002809		...	...	O|O	85724	89443
		481700006848		...	...	O|O	85724	89443
		SDA471700002809		...	...	O|O	85724	89443
18-23	126 Models with 12000 to 13300 lb Taperleaf Front Suspension	10-14193-000	O|O	83396	...		...	...
		10-14282-000	O|O	83396	...		...	...
		10-14317-000	O|O	83396	...		...	...
		1014193000	O|O	83396	...		...	...
		1014317000	O|O	83396	...		...	...
		A90193	O|O	83396	...		...	...
		X9007009-73	O|O	83396	...		...	...
20-23	Models with Hendrickson Airtek NXT Front	58913-015		85200	...		...	...
		58913015		85200	...		...	...
21-23	Cascadia 126 Day Cab and Sleeper cabs w/ 12 mm Top mounting bolt	18-73207-000	O|O	83911				
		1873207000	O|O	83911				
		814903018451	O|O	83911				
2008	125 Models with 12000 to 13300 lb Taperleaf Front Suspension	10-13211-000	O|O	85918	89449		...	...
		10-13634-000	O|O	85918	89449		...	...
		1013211000	O|O	85918	89449		...	...
		1013634000	O|O	85918	89449		...	...
		471700000449	O|O	85918	89449		...	...
		471700131155	O|O	85918	89449		...	...

APPLICATION GUIDE - TRUCKS, TRAILERS AND BUSES

Year Ano Année	Model Modelo Modle	OEM #		Front			Rear	
				Fleetline	GasSLX		Fleetline	GasSLX
FREIGHTLINER (CONT'D)								
CENTURY CLASS								
00-11	Models with 12000 lb Taperleaf Front Suspension	10-13021-000	○|○	**85918**	**89449**		...	...
		10-13063-000	○|○	**85918**	**89449**		...	...
		10-13211-000	○|○	**85918**	**89449**		...	...
		10-13634-000	○|○	**85918**	**89449**		...	...
		1013021000	○|○	**85918**	**89449**		...	...
		1013063000	○|○	**85918**	**89449**		...	...
		1013211000	○|○	**85918**	**89449**		...	...
		1013634000	○|○	**85918**	**89449**		...	...
		471700000449	○|○	**85918**	**89449**		...	...
		471700131155	○|○	**85918**	**89449**		...	...
00-11	Models with Hendrickson Front Airtek	58913-003	○|○	**85932**	**89453**		...	...
		58913-003L	○|○	**85932**	**89453**		...	...
		58913003	○|○	**85932**	**89453**		...	...
		58913003L	○|○	**85932**	**89453**		...	...
		471700131331	○|○	**85932**	**89453**		...	...
96-11	Day Cab Suspensions with O.E.M. Number	18-30378-000	○|○	**83006**				
		18-32999-001	○|○	**83006**				
		18-60295-000	○|○	**83006**				
		1830378000	○|○	**83006**				
		1832999001	○|○	**83006**				
		1860295000	○|○	**83006**				
96-11	Models with FAS II (40,000 lb) Rear Air Suspension	16-13957-000		...	...	○|○	**85724**	**89443**
		16-15817-000		...	...	○|○	**85724**	**89443**
		680339		...	...	○|○	**85724**	**89443**
		680611		...	...	○|○	**85724**	**89443**
		1613957000		...	...	○|○	**85724**	**89443**
		1615817000		...	...	○|○	**85724**	**89443**
96-11	Models with Freightliner Low Profile Rear Air Suspension (18,000 to 40,000 lb)	16-14259-000		...	...	○|○	**85331**	...
		16-18706-000		...	...	○|○	**85331**	...
		680511		...	...	○|○	**85331**	...
		1614259000		...	...	○|○	**85331**	...
		1618706000		...	...	○|○	**85331**	...
		471700002992		...	...	○|○	**85331**	...
96-11	Sleeper-Cabs with O.E. Number	18-30378-000	○|○	**83001**				
		18-32999-000	○|○	**83001**				
		654819	○|○	**83001**				
		1830378000	○|○	**83001**				
		1832999000	○|○	**83001**				
97-99	Models with 12000 lb Taperleaf Front Suspension	10-12542-000	○|○	**85901**	...		...	...
		1012542000	○|○	**85901**	...		...	...
CLASSIC								
01-11	Models with 12000 lb Taperleaf Front Suspension	10-13021-000	○|○	**85918**	**89449**		...	...
		10-13063-000	○|○	**85918**	**89449**		...	...
		10-13211-000	○|○	**85918**	**89449**		...	...
		10-13634-000	○|○	**85918**	**89449**		...	...
		1013021000	○|○	**85918**	**89449**		...	...
		1013063000	○|○	**85918**	**89449**		...	...
		1013211000	○|○	**85918**	**89449**		...	...
		1013634000	○|○	**85918**	**89449**		...	...
		471700000449	○|○	**85918**	**89449**		...	...
		471700131155	○|○	**85918**	**89449**		...	...
01-11	Models with FAS II (40,000 lb) Rear Air Suspension	16-13957-000		...	...	○|○	**85724**	**89443**
		16-15817-000		...	...	○|○	**85724**	**89443**

APPLICATION GUIDE - TRUCKS, TRAILERS AND BUSES

Year Ano Année	Model Modelo Modle	OEM #		Front			Rear	
				Fleetline	GasSLX		Fleetline	GasSLX
FREIGHTLINER (CONT'D)								
CLASSIC (cont'd)								
01-11	Models with FAS II (40,000 lb) Rear Air Suspension	16-18708-000		...	...	O|O	85724	89443
		680339		...	...	O|O	85724	89443
		680611		...	...	O|O	85724	89443
		1613957000		...	...	O|O	85724	89443
		1615817000		...	...	O|O	85724	89443
		1618708000		...	...	O|O	85724	89443
		471700002809		...	...	O|O	85724	89443
		481700006848		...	...	O|O	85724	89443
		SDA471700002809		...	...	O|O	85724	89443
01-11	Models with Hendrickson Front Airtek	58913-003	O|O	85932	89453		...	...
		58913-003L	O|O	85932	89453		...	...
		58913003	O|O	85932	89453		...	...
		58913003L	O|O	85932	89453		...	...
		471700131331	O|O	85932	89453		...	...
01-11	Sleeper Cab models with Air Suspension	18-29846-000	O|O	83009				
		1829846000	O|O	83009				
CLASSIC XL								
01-09	Models with 12000 lb Taperleaf Front Suspension	10-13021-000	O|O	85918	89449		...	...
		10-13063-000	O|O	85918	89449		...	...
		10-13211-000	O|O	85918	89449		...	...
		10-13634-000	O|O	85918	89449		...	...
		1013021000	O|O	85918	89449		...	...
		1013063000	O|O	85918	89449		...	...
		1013211000	O|O	85918	89449		...	...
		1013634000	O|O	85918	89449		...	...
		471700000449	O|O	85918	89449		...	...
		471700131155	O|O	85918	89449		...	...
01-09	Models with FAS II (40,000 lb) Rear Air Suspension	16-13957-000		...	...	O|O	85724	89443
		16-15817-000		...	...	O|O	85724	89443
		16-18708-000		...	...	O|O	85724	89443
		680339		...	...	O|O	85724	89443
		680611		...	...	O|O	85724	89443
		1613957000		...	...	O|O	85724	89443
		1615817000		...	...	O|O	85724	89443
		1618708000		...	...	O|O	85724	89443
		471700002809		...	...	O|O	85724	89443
		481700006848		...	...	O|O	85724	89443
		SDA471700002809		...	...	O|O	85724	89443
01-09	Models with Hendrickson Front Airtek	58913-003	O|O	85932	89453		...	...
		58913-003L	O|O	85932	89453		...	...
		58913003	O|O	85932	89453		...	...
		58913003L	O|O	85932	89453		...	...
		471700131331	O|O	85932	89453		...	...
COLUMBIA								
00-08	Models with 12000 lb Taperleaf Front Suspension	10-13021-000	O|O	85918	89449		...	...
		10-13063-000	O|O	85918	89449		...	...
		10-13211-000	O|O	85918	89449		...	...
		10-13634-000	O|O	85918	89449		...	...
		10-13684-000	O|O	85918	89449		...	...
		1013021000	O|O	85918	89449		...	...
		1013063000	O|O	85918	89449		...	...
		1013211000	O|O	85918	89449		...	...

FREIGHTLINER (CONT'D)

COLUMBIA (cont'd)

Year Ano Année	Model Modelo Modle	OEM #	Front Fleetline	Front GasSLX	Rear Fleetline	Rear GasSLX
00-08	Models with 12000 lb Taperleaf Front Suspension	1013634000	85918	89449	...	...
		1013684000	85918	89449	...	...
		471700000449	85918	89449	...	...
		471700131155	85918	89449	...	...
00-17	Models with Sleeper Cabs w/O.E.M. Numbers	18-41762-000	83038			
		18-60764-000	83038			
		1841762000	83038			
		1860764000	83038			
		814903003528	83038			
00-18	Models with FAS II (40,000 lb) Rear Air Suspension	16-15817-000	...	...	85724	89443
		16-18708-000	...	...	85724	89443
		680611	...	...	85724	89443
		1615817000	...	...	85724	89443
		1618708000	...	...	85724	89443
		471700002808	...	...	85724	89443
		471700002809	...	...	85724	89443
		481700006848	...	...	85724	89443
		SDA471700002809	...	...	85724	89443
17-18	Models with Sleeper Cabs w/O.E.M. Numbers	18-69674-000	83906			
		1869674000	83906			
		814903015188	83906			
00-20	All Models with Freightliner TufTrac Rear Air Suspension	16-15770-000	...	...	85956	...
		1615770000	...	...	85956	...
		481700125969	...	...	85956	...
00-20	Models with Hendrickson Front Airtek	58913-003	85932	89453	...	...
		58913-003L	85932	89453	...	...
		58913-012	85932	89453	...	...
		58913-012L	85932	89453	...	...
		58913003	85932	89453	...	...
		58913003L	85932	89453	...	...
		58913012	85932	89453	...	...
		58913012L	85932	89453	...	...
		471700006269	85932	89453	...	...
		471700131331	85932	89453	...	...
09-20	Models with 12000 lb Taperleaf Front Suspension	10-13809-000	85958	...	...	...
		1013809000	85958	...	...	...
		SDA471700003920	85958	...	...	...

CONDOR

01-07	Models with 14,600 to 20,000 lb Front Suspension	10-13211-000	85918	89449	...	...
		10-13634-000	85918	89449	...	...
		1013211000	85918	89449	...	...
		1013634000	85918	89449	...	...
		471700000449	85918	89449	...	...
		471700131155	85918	89449	...	...
01-07	Models with Chalmers 46,000 lb Rear Suspension	665174	...	...	85060	...
01-07	Models with FAS II (40,000 lb) Rear Air Suspension	16-13957-000	...	...	85724	89443
		16-15817-000	...	...	85724	89443
		16-18708-000	...	...	85724	89443
		680339	...	...	85724	89443
		1613957000	...	...	85724	89443
		1615817000	...	...	85724	89443
		1618708000	...	...	85724	89443
		471700002809	...	...	85724	89443

FREIGHTLINER (CONT'D)

CONDOR (cont'd)

Year / Ano / Année	Model / Modelo / Modle	OEM #		Front			Rear	
				Fleetline	GasSLX		Fleetline	GasSLX
01-07	Models with FAS II (40,000 lb) Rear Air Suspension	481700006848		...	...	O|O	85724	89443
		SDA471700002809		...	...	O|O	85724	89443
01-07	Models with Freightliner TufTrac Rear Air Suspension	16-15770-000		...	...	O|O	85956	...
		1615770000		...	...	O|O	85956	...
		481700125969		...	...	O|O	85956	...
02-07	Models with Hendrickson HMX 400/460 Haulmax with 16.5" Saddle	60680-004		...	...		83143	...
		60680-004L		...	...		83143	...
		60680004		...	...		83143	...
		60680004L		...	...		83143	...
		H60680004		...	...		83143	...
02-07	Models with Hendrickson HMX 400/460 Haulmax with 17.5" & 18.5" Saddle	60680-005		...	...		83142	...
		60680-005L		...	...		83142	...
		60680005		...	...		83142	...
		60680005L		...	...		83142	...
		HDR60680-005		...	...		83142	...
		HDR60680005		...	...		83142	...

CORONADO

01-09	Models with 12000 lb Taperleaf Front Suspension	10-13211-000	O|O	85918	89449		...	...
		1013211000	O|O	85918	89449		...	...
01-17	Models with Sleeper Cabs w/O.E.M. Numbers	18-41762-000	O|O	83038				
		18-41762-002	O|O	83038				
		18-60764-000	O|O	83038				
		18-60765-002	O|O	83038				
		1841762000	O|O	83038				
		1841762002	O|O	83038				
		1860764000	O|O	83038				
		1860765002	O|O	83038				
		814903003528	O|O	83038				
01-20	Models with Chalmers 46,000 lb Rear Suspension	665174		...	...	O|O	85060	...
01-20	Models with FAS II (40,000 lb) Rear Air Suspension	16-15817-000		...	...	O|O	85724	89443
		16-18708-000		...	...	O|O	85724	89443
		680611		...	...	O|O	85724	89443
		1615817000		...	...	O|O	85724	89443
		1618708000		...	...	O|O	85724	89443
		471700002809		...	...	O|O	85724	89443
		481700006848		...	...	O|O	85724	89443
		SDA471700002809		...	...	O|O	85724	89443
01-20	Models with Freightliner TufTrac Rear Air Suspension	16-15770-000		...	...	O|O	85956	...
		1615770000		...	...	O|O	85956	...
		481700125969		...	...	O|O	85956	...
01-20	Models with Hendrickson Front Airtek	58913-003	O|O	85932	89453		...	...
		58913-003L	O|O	85932	89453		...	...
		58913-012	O|O	85932	89453		...	...
		58913-012L	O|O	85932	89453		...	...
		58913003	O|O	85932	89453		...	...
		58913003L	O|O	85932	89453		...	...
		58913012	O|O	85932	89453		...	...
		58913012L	O|O	85932	89453		...	...
		471700006269	O|O	85932	89453		...	...
		471700131331	O|O	85932	89453		...	...
10-20	Models with 12,000 lb to 20,000 Front Axle	10-13809-000	O|O	85958	...		...	...
		1013809000	O|O	85958	...		...	...
		471700003920	O|O	85958	...		...	...

Year Ano Année	Model Modelo Modle	OEM #		Front			Rear	
				Fleetline	GasSLX		Fleetline	GasSLX
FREIGHTLINER (CONT'D)								
CORONADO (cont'd)								
17-20	Day Cab and Sleeper Cabs w/O.E.M. Numbers	18-69674-000	○|○	**83906**				
		1869674000	○|○	**83906**				
		814903015188	○|○	**83906**				
FC70								
99-04	Models with 10,000 to 18,000 lb Suspension	10-13759-000	○|○	**85006**	...		...	...
		1013759000	○|○	**85006**	...		...	...
		6803230300	○|○	**85006**	...		...	...
		471700003009	○|○	**85006**	...		...	...
		GBL665538	○|○	**85006**	...		...	...
99-04	Models with 6000 to 9000 lb Front axle	654654	○|○	**85043**	...		...	...
		6803230200	○|○	**85043**	...		...	...
1999	Models with FAS II (40,000 lb) Rear Air Suspension	1615817000		...	...	○|○	**85724**	89443
2000	Models with FAS II (40,000 lb) Rear Air Suspension	1613957000		...	...	○|○	**85724**	89443
2001	Models with FAS II (40,000 lb) Rear Air Suspension	680339		...	...	○|○	**85724**	89443
2002	Models with FAS II (40,000 lb) Rear Air Suspension	680611		...	...	○|○	**85724**	89443
2003	Models with FAS II (40,000 lb) Rear Air Suspension	16-15817-000		...	...	○|○	**85724**	89443
2004	Models with FAS II (40,000 lb) Rear Air Suspension	16-13957-000		...	...	○|○	**85724**	89443
FC80								
99-07	Models with 10,000 to 18,000 lb Suspension	10-13759-000	○|○	**85006**	...		...	...
		1013759000	○|○	**85006**	...		...	...
		6803230300	○|○	**85006**	...		...	...
		471700003009	○|○	**85006**	...		...	...
		GBL665538	○|○	**85006**	...		...	...
99-07	Models with 6000 to 9000 lb Front axle	654654	○|○	**85043**	...		...	...
		6803230200	○|○	**85043**	...		...	...
1999	Models with FAS II (40,000 lb) Rear Air Suspension	1615817000		...	...	○|○	**85724**	89443
2000	Models with FAS II (40,000 lb) Rear Air Suspension	1613957000		...	...	○|○	**85724**	89443
2001	Models with FAS II (40,000 lb) Rear Air Suspension	680339		...	...	○|○	**85724**	89443
2002	Models with FAS II (40,000 lb) Rear Air Suspension	680611		...	...	○|○	**85724**	89443
2003	Models with FAS II (40,000 lb) Rear Air Suspension	16-15817-000		...	...	○|○	**85724**	89443
2004	Models with FAS II (40,000 lb) Rear Air Suspension	16-13957-000		...	...	○|○	**85724**	89443
2005	Models with FAS II (40,000 lb) Rear Air Suspension	680611		...	...	○|○	**85724**	89443
2006	Models with FAS II (40,000 lb) Rear Air Suspension	16-15817-000		...	...	○|○	**85724**	89443
2007	Models with FAS II (40,000 lb) Rear Air Suspension	16-13957-000		...	...	○|○	**85724**	89443
FL50								
95-05	Models with 10,000 to 18,000 lb Suspension	10-13759-000	○|○	**85006**	...		...	...
		1013759000	○|○	**85006**	...		...	...
		6803230300	○|○	**85006**	...		...	...
		471700003009	○|○	**85006**	...		...	...
		GBL665538	○|○	**85006**	...		...	...
95-05	Models with 15,000 lb Rear Suspension	6803260000		...	...		**83120**	...
		GBL654725		...	...		**83120**	...
95-05	Models with 6000 to 9000 lb Front axle	654654	○|○	**85043**	...		...	...
		6803230200	○|○	**85043**	...		...	...
95-05	Models with FAS II (40,000 lb) Rear Air Suspension	16-13957-000		...	...	○|○	**85724**	89443
		16-15817-000		...	...	○|○	**85724**	89443
		680339		...	...	○|○	**85724**	89443
		680611		...	...	○|○	**85724**	89443
		1613957000		...	...	○|○	**85724**	89443
		1615817000		...	...	○|○	**85724**	89443
96-05	Day Cab Suspensions with O.E.M. Number	18-30378-000	○|○	**83006**				

Year Ano Année	Model Modelo Modle	OEM #		Front			Rear	
				Fleetline	GasSLX		Fleetline	GasSLX

FREIGHTLINER (CONT'D)

FL50 (cont'd)

96-05	Day Cab Suspensions with O.E.M. Number	18-32999-001	O|O	83006				
		18-60295-000	O|O	83006				
		1830378000	O|O	83006				
		1832999001	O|O	83006				
		1860295000	O|O	83006				

FL60

91-05	Models with 10,000 to 18,000 lb Suspension	10-13759-000	O|O	85006	...		...	...
		1013759000	O|O	85006	...		...	...
		6803230300	O|O	85006	...		...	...
		471700003009	O|O	85006	...		...	...
		GBL665538	O|O	85006	...		...	...
91-05	Models with 6000 to 9000 lb Front axle	654654	O|O	85043	...		...	...
		6803230200	O|O	85043	...		...	...
91-05	Models with FAS II (40,000 lb) Rear Air Suspension	16-13957-000		...	...	O|O	85724	89443
		16-15817-000		...	...	O|O	85724	89443
		680339		...	...	O|O	85724	89443
		680611		...	...	O|O	85724	89443
		1613957000		...	...	O|O	85724	89443
		1615817000		...	...	O|O	85724	89443
91-05	Trucks with Link Cabmate Models FRT153BC-A , FRT106BC or FRT106HD-A	1201-0054	O|O	83021				
		1202-0054	O|O	83021				
		12010054	O|O	83021				
		12020054	O|O	83021				
91-05	w/ 15000 lb Rear Suspension	6803260000		...	...		83120	...
		GBL654725		...	...		83120	...
96-05	Day Cab Suspensions with O.E.M. Number	18-30378-000	O|O	83006				
		18-32999-001	O|O	83006				
		18-60295-000	O|O	83006				
		1830378000	O|O	83006				
		1832999001	O|O	83006				
		1860295000	O|O	83006				

FL70

91-06	Models with 10,000 to 18,000 lb Suspension	10-13759-000	O|O	85006	...		...	...
		1013759000	O|O	85006	...		...	...
		6803230300	O|O	85006	...		...	...
		471700003009	O|O	85006	...		...	...
		GBL665538	O|O	85006	...		...	...
91-06	Models with 6000 to 9000 lb Front axle	654654	O|O	85043	...		...	...
		6803230200	O|O	85043	...		...	...
91-06	Models with FAS II (40,000 lb) Rear Air Suspension	16-13957-000		...	...	O|O	85724	89443
		16-15817-000		...	...	O|O	85724	89443
		680339		...	...	O|O	85724	89443
		680611		...	...	O|O	85724	89443
		1613957000		...	...	O|O	85724	89443
		1615817000		...	...	O|O	85724	89443
91-06	Trucks with Link Cabmate Models FRT153BC-A , FRT106BC or FRT106HD-A	1201-0054	O|O	83021				
		1202-0054	O|O	83021				
		12010054	O|O	83021				
		12020054	O|O	83021				
91-06	w/ 15000 lb Rear Suspension	6803260000		...	...		83120	...
		GBL654725		...	...		83120	...
96-06	Day Cab Suspensions with O.E.M. Number	18-30378-000	O|O	83006				

Year Ano Année	Model Modelo Modle	OEM #		Front			Rear	
				Fleetline	GasSLX		Fleetline	GasSLX
FREIGHTLINER (CONT'D)								
FL70 (cont'd)								
96-06	Day Cab Suspensions with O.E.M. Number	18-32999-001	○|○	**83006**				
		18-60295-000	○|○	**83006**				
		1830378000	○|○	**83006**				
		1832999001	○|○	**83006**				
		1860295000	○|○	**83006**				
FL80								
91-06	Models with 10,000 to 18,000 lb Suspension	10-13759-000	○|○	**85006**	...		...	...
		1013759000	○|○	**85006**	...		...	...
		6803230300	○|○	**85006**	...		...	...
		471700003009	○|○	**85006**	...		...	...
		GBL665538	○|○	**85006**	...		...	...
91-06	Models with 6000 to 9000 lb Front axle	654654	○|○	**85043**	...		...	...
		6803230200	○|○	**85043**	...		...	...
91-06	Models with FAS II (40,000 lb) Rear Air Suspension	16-13957-000		...	...	○|○	**85724**	**89443**
		16-15817-000		...	...	○|○	**85724**	**89443**
		680339		...	...	○|○	**85724**	**89443**
		680611		...	...	○|○	**85724**	**89443**
		1613957000		...	...	○|○	**85724**	**89443**
		1615817000		...	...	○|○	**85724**	**89443**
91-06	Trucks with Link Cabmate Models FRT153BC-A , FRT106BC or FRT106HD-A	1201-0054	○|○	**83021**				
		1202-0054	○|○	**83021**				
		12010054	○|○	**83021**				
		12020054	○|○	**83021**				
91-06	w/ 15000 lb Rear Suspension	6803260000		...	...		**83120**	...
		GBL654725		...	...		**83120**	...
96-06	Day Cab Suspensions with O.E.M. Number	18-30378-000	○|○	**83006**				
		18-32999-001	○|○	**83006**				
		18-60295-000	○|○	**83006**				
		1830378000	○|○	**83006**				
		1832999001	○|○	**83006**				
		1860295000	○|○	**83006**				
FL106								
94-03	Trucks with Link Cabmate Models FRT153BC-A , FRT106BC or FRT106HD-A	1201-0054	○|○	**83021**				
		1202-0054	○|○	**83021**				
		12010054	○|○	**83021**				
		12020054	○|○	**83021**				
FL112								
96-06	Day Cab Tractors with Link Cabmate Model FRT112DC	1201-1044	○|○	**83025**				
		1202-1044	○|○	**83025**				
		12011044	○|○	**83025**				
		12021044	○|○	**83025**				
FLA086								
89-99	Models with 86", 96" & 104" Cabs with Link Cabmate Model FRT285	1202-0032	○|○	**83016**				
		12020032	○|○	**83016**				
89-99	Models with Airliner Rolling Lobe Spring Air Suspension	16-13947-000		...	...	–|○	**85319**	**89428**
		681-326-0400		...	...	–|○	**85319**	**89428**
		1613947000		...	...	–|○	**85319**	**89428**
		6813260400		...	...	–|○	**85319**	**89428**
89-99	Models with Convoluted Spring Air Suspension	16-12117-000		...	...	○|○	**85007**	...
		16-18705-000		...	...	○|○	**85007**	...

Year Ano Année	Model Modelo Modle	OEM #		Front			Rear	
				Fleetline	GasSLX		Fleetline	GasSLX
FREIGHTLINER (CONT'D)								
FLA086 (cont'd)								
89-99	Models with Convoluted Spring Air Suspension	665236		...	...	O|O	85007	...
		1612117000		...	...	O|O	85007	...
		1618705000		...	...	O|O	85007	...
		471700002990		...	...	O|O	85007	...
89-99	Models with FAS II (40,000 lb) Rear Air Suspension	16-13957-000		...	...	O|O	85724	89443
		16-15817-000		...	...	O|O	85724	89443
		680339		...	...	O|O	85724	89443
		680611		...	...	O|O	85724	89443
		1613957000		...	...	O|O	85724	89443
		1615817000		...	...	O|O	85724	89443
89-99	Models with Neway Tag Axle Air Suspension	90044162		...	...	O|O	83128	89436
89-99	Models with O.E.M. Number	10-12030-002	O|O	85320	89429		...	...
		10-12032-000	O|O	85320	89429		...	...
		10-12032-001	O|O	85320	89429		...	...
		10-12032-002	O|O	85320	89429		...	...
		10-12032-003	O|O	85320	89429		...	...
		10-12032-004	O|O	85320	89429		...	...
		681-891-02-05	O|O	83017				
		1012030002	O|O	85320	89429		...	...
		1012032000	O|O	85320	89429		...	...
		1012032001	O|O	85320	89429		...	...
		1012032002	O|O	85320	89429		...	...
		1012032003	O|O	85320	89429		...	...
		1012032004	O|O	85320	89429		...	...
		6818910205	O|O	83017				
		GBL 650361	O|O	83017				
FLB								
94-99	Models with 86", 96" & 104" Cabs with Link Cabmate Model FRT285	1202-0032	O|O	83016				
		12020032	O|O	83016				
94-99	Models with Airliner Rolling Lobe Spring Air Suspension	16-13947-000		...	...	–|O	85319	89428
		681-326-0400		...	...	–|O	85319	89428
		1613947000		...	...	–|O	85319	89428
		6813260400		...	...	–|O	85319	89428
94-99	Models with Convoluted Spring Air Suspension	16-12117-000		...	...	O|O	85007	...
		16-18705-000		...	...	O|O	85007	...
		665236		...	...	O|O	85007	...
		1612117000		...	...	O|O	85007	...
		1618705000		...	...	O|O	85007	...
		471700002990		...	...	O|O	85007	...
94-99	Models with FAS II (40,000 lb) Rear Air Suspension	16-13957-000		...	...	O|O	85724	89443
		16-15817-000		...	...	O|O	85724	89443
		680339		...	...	O|O	85724	89443
		680611		...	...	O|O	85724	89443
		1613957000		...	...	O|O	85724	89443
		1615817000		...	...	O|O	85724	89443
94-99	Models with Neway Tag Axle Air Suspension	90044162		...	...	O|O	83128	89436
94-99	Models with O.E.M. Number	10-12030-002	O|O	85320	89429		...	...
		10-12032-000	O|O	85320	89429		...	...
		10-12032-001	O|O	85320	89429		...	...
		10-12032-002	O|O	85320	89429		...	...
		10-12032-003	O|O	85320	89429		...	...
		10-12032-004	O|O	85320	89429		...	...
		1012030002	O|O	85320	89429		...	...

FREIGHTLINER (CONT'D)

FLB (cont'd)

Year Ano Année	Model Modelo Modle	OEM #	Front Fleetline	Front GasSLX	Rear Fleetline	Rear GasSLX
94-99	Models with O.E.M. Number	1012032000	85320	89429	...	...
		1012032001	85320	89429	...	...
		1012032002	85320	89429	...	...
		1012032003	85320	89429	...	...
		1012032004	85320	89429	...	...
94-99	Trucks with 90", 100", & 110" Cabs with Link Cabmate Models FRT46-2P-A or FRT46-2P-B	1201-0054	83021			
		1202-0054	83021			
		12010054	83021			
		12020054	83021			
2002	Models with 86", 96" & 104" Cabs with Link Cabmate Model FRT285	1202-0032	83016			
		12020032	83016			
2002	Models with Airliner Rolling Lobe Spring Air Suspension	16-13947-000	...	...	85319	89428
		681-326-0400	...	...	85319	89428
		1613947000	...	...	85319	89428
		6813260400	...	...	85319	89428
2002	Models with Convoluted Spring Air Suspension	16-12117-000	...	...	85007	...
		16-18705-000	...	...	85007	...
		665236	...	...	85007	...
		1612117000	...	...	85007	...
		1618705000	...	...	85007	...
		471700002990	...	...	85007	...
2002	Models with FAS II (40,000 lb) Rear Air Suspension	16-13957-000	...	...	85724	89443
		16-15817-000	...	...	85724	89443
		680339	...	...	85724	89443
		680611	...	...	85724	89443
		1613957000	...	...	85724	89443
		1615817000	...	...	85724	89443
2002	Models with Neway Tag Axle Air Suspension	90044162	...	...	83128	89436
2002	Models with O.E.M. Number	1012030002	85320	89429	...	...
2002	Trucks with 90", 100", & 110" Cabs with Link Cabmate Models FRT46-2P-A or FRT46-2P-B	1201-0054	83021			
		1202-0054	83021			
		12010054	83021			
		12020054	83021			

FLC112

Year Ano Année	Model Modelo Modle	OEM #	Front Fleetline	Front GasSLX	Rear Fleetline	Rear GasSLX
85-01	Models with Convoluted Spring Air Suspension	16-12117-000	...	...	85007	...
		16-18705-000	...	...	85007	...
		665236	...	...	85007	...
		1612117000	...	...	85007	...
		1618705000	...	...	85007	...
		471700002990	...	...	85007	...
89-01	Conventional Tractors with Link Cabmate Model FRTE120-A	1201-1043	83025			
		1202-1043	83025			
		12011043	83025			
		12021043	83025			
95-01	Models with 12000 lb Taperleaf Front Suspension	10-13021-000	85918	89449	...	...
		10-13063-000	85918	89449	...	...
		10-13211-000	85918	89449	...	...
		10-13634-000	85918	89449	...	...
		1013021000	85918	89449	...	...
		1013063000	85918	89449	...	...
		1013211000	85918	89449	...	...
		1013634000	85918	89449	...	...

Year Ano Année	Model Modelo Modle	OEM #		Front			Rear	
				Fleetline	GasSLX		Fleetline	GasSLX
FREIGHTLINER (CONT'D)								
FLC112 (cont'd)								
95-01	Models with 12000 lb Taperleaf Front Suspension	471700000449	O|O	**85918**	**89449**		...	...
		471700131155	O|O	**85918**	**89449**		...	...
95-01	Models with FAS II (40,000 lb) Rear Air Suspension	16-13957-000		...	...	O|O	**85724**	**89443**
		16-15817-000		...	...	O|O	**85724**	**89443**
		680339		...	...	O|O	**85724**	**89443**
		680611		...	...	O|O	**85724**	**89443**
		1613957000		...	...	O|O	**85724**	**89443**
		1615817000		...	...	O|O	**85724**	**89443**
85-97	Models with O.E.M. Number	10-12030-002	O|O	**85320**	**89429**		...	...
		10-12032-000	O|O	**85320**	**89429**		...	...
		10-12032-001	O|O	**85320**	**89429**		...	...
		10-12032-002	O|O	**85320**	**89429**		...	...
		10-12032-003	O|O	**85320**	**89429**		...	...
		10-12032-004	O|O	**85320**	**89429**		...	...
		1012030002	O|O	**85320**	**89429**		...	...
		1012032000	O|O	**85320**	**89429**		...	...
		1012032001	O|O	**85320**	**89429**		...	...
		1012032002	O|O	**85320**	**89429**		...	...
		1012032003	O|O	**85320**	**89429**		...	...
		1012032004	O|O	**85320**	**89429**		...	...
FLC120								
81-88	Models with Convoluted Spring Air Suspension	16-12117-000		...	...	O|O	**85007**	...
		16-18705-000		...	...	O|O	**85007**	...
		665236		...	...	O|O	**85007**	...
		1612117000		...	...	O|O	**85007**	...
		1618705000		...	...	O|O	**85007**	...
		471700002990		...	...	O|O	**85007**	...
87-88	Models with O.E.M. Number	10-12030-002	O|O	**85320**	**89429**		...	...
		10-12032-000	O|O	**85320**	**89429**		...	...
		10-12032-001	O|O	**85320**	**89429**		...	...
		10-12032-002	O|O	**85320**	**89429**		...	...
		10-12032-003	O|O	**85320**	**89429**		...	...
		10-12032-004	O|O	**85320**	**89429**		...	...
		1012030002	O|O	**85320**	**89429**		...	...
		1012032000	O|O	**85320**	**89429**		...	...
		1012032001	O|O	**85320**	**89429**		...	...
		1012032002	O|O	**85320**	**89429**		...	...
		1012032003	O|O	**85320**	**89429**		...	...
		1012032004	O|O	**85320**	**89429**		...	...
1991	Conventional Tractors with Link Cabmate Model FRTE120-A	1201-1043	O|O	**83025**				
		1202-1043	O|O	**83025**				
		12011043	O|O	**83025**				
		12021043	O|O	**83025**				
1991	Models with Convoluted Spring Air Suspension	16-12117-000		...	...	O|O	**85007**	...
		16-18705-000		...	...	O|O	**85007**	...
		665236		...	...	O|O	**85007**	...
		1612117000		...	...	O|O	**85007**	...
		1618705000		...	...	O|O	**85007**	...
		471700002990		...	...	O|O	**85007**	...
1991	Models with O.E.M. Number	10-12030-002	O|O	**85320**	**89429**		...	...
		10-12032-000	O|O	**85320**	**89429**		...	...
		10-12032-001	O|O	**85320**	**89429**		...	...
		10-12032-002	O|O	**85320**	**89429**		...	...

FREIGHTLINER (CONT'D)

FLC120 (cont'd)

Year Ano Année	Model Modelo Modle	OEM #		Front			Rear	
				Fleetline	GasSLX		Fleetline	GasSLX
1991	Models with O.E.M. Number	10-12032-003	○|○	85320	89429		...	...
		10-12032-004	○|○	85320	89429		...	...
		1012030002	○|○	85320	89429		...	...
		1012032000	○|○	85320	89429		...	...
		1012032001	○|○	85320	89429		...	...
		1012032002	○|○	85320	89429		...	...
		1012032003	○|○	85320	89429		...	...
		1012032004	○|○	85320	89429		...	...

FLD112

02-08	Models with Hendrickson Front Airtek	58913-003	○|○	85932	89453		...	...
		58913-003L	○|○	85932	89453		...	...
		58913-012	○|○	85932	89453		...	...
		58913-012L	○|○	85932	89453		...	...
		58913003	○|○	85932	89453		...	...
		58913003L	○|○	85932	89453		...	...
		58913012	○|○	85932	89453		...	...
		58913012L	○|○	85932	89453		...	...
		471700006269	○|○	85932	89453		...	...
		471700131331	○|○	85932	89453		...	...
91-08	Models with Convoluted Spring Air Suspension	16-12117-000		...	...	○|○	85007	...
		16-18705-000		...	...	○|○	85007	...
		665236		...	...	○|○	85007	...
		1612117000		...	...	○|○	85007	...
		1618705000		...	...	○|○	85007	...
		471700002990		...	...	○|○	85007	...
91-08	Models with O.E.M. Number	10-12030-002	○|○	85320	89429		...	...
		10-12032-000	○|○	85320	89429		...	...
		10-12032-001	○|○	85320	89429		...	...
		10-12032-002	○|○	85320	89429		...	...
		10-12032-003	○|○	85320	89429		...	...
		10-12032-004	○|○	85320	89429		...	...
		1201-1043	○|○	83025				
		1201-1044	○|○	83025				
		1202-1043	○|○	83025				
		1202-1044	○|○	83025				
		12011043	○|○	83025				
		12011044	○|○	83025				
		12021043	○|○	83025				
		12021044	○|○	83025				
		1012030002	○|○	85320	89429		...	...
		1012032000	○|○	85320	89429		...	...
		1012032001	○|○	85320	89429		...	...
		1012032002	○|○	85320	89429		...	...
		1012032003	○|○	85320	89429		...	...
		1012032004	○|○	85320	89429		...	...
91-08	Sleeper Cab models with Air Suspension	18-29846-000	○|○	83009				
		1829846000	○|○	83009				
95-08	Models with 12000 lb Taperleaf Front Suspension	10-13021-000	○|○	85918	89449		...	...
		10-13063-000	○|○	85918	89449		...	...
		10-13211-000	○|○	85918	89449		...	...
		10-13634-000	○|○	85918	89449		...	...
		1013021000	○|○	85918	89449		...	...
		1013063000	○|○	85918	89449		...	...

FREIGHTLINER (CONT'D)

FLD112 (cont'd)

Year Ano Année	Model Modelo Modle	OEM #		Front Fleetline	Front GasSLX		Rear Fleetline	Rear GasSLX
95-08	Models with 12000 lb Taperleaf Front Suspension	1013211000	O|O	85918	89449		...	...
		1013634000	O|O	85918	89449		...	...
		471700000449	O|O	85918	89449		...	...
		471700131155	O|O	85918	89449		...	...
95-08	Models with FAS II (40,000 lb) Rear Air Suspension	16-13957-000		...	...	O|O	85724	89443
		16-15817-000		...	...	O|O	85724	89443
		680339		...	...	O|O	85724	89443
		680611		...	...	O|O	85724	89443
		1613957000		...	...	O|O	85724	89443
		1615817000		...	...	O|O	85724	89443
2008	All Models with Freightliner TufTrac Rear Air Suspension	16-15770-000		...	...	O|O	85956	...
		1615770000		...	...	O|O	85956	...
		481700125969		...	...	O|O	85956	...

FLD120

95-08	Models with 12000 lb Taperleaf Front Suspension	10-13021-000	O|O	85918	89449		...	...
		10-13063-000	O|O	85918	89449		...	...
		10-13211-000	O|O	85918	89449		...	...
		10-13634-000	O|O	85918	89449		...	...
		1013021000	O|O	85918	89449		...	...
		1013063000	O|O	85918	89449		...	...
		1013211000	O|O	85918	89449		...	...
		1013634000	O|O	85918	89449		...	...
		471700000449	O|O	85918	89449		...	...
		471700131155	O|O	85918	89449		...	...
02-11	Models with Hendrickson Front Airtek	58913-003	O|O	85932	89453		...	...
		58913-003L	O|O	85932	89453		...	...
		58913-012	O|O	85932	89453		...	...
		58913-012L	O|O	85932	89453		...	...
		58913003	O|O	85932	89453		...	...
		58913003L	O|O	85932	89453		...	...
		58913012	O|O	85932	89453		...	...
		58913012L	O|O	85932	89453		...	...
		471700006269	O|O	85932	89453		...	...
		471700131331	O|O	85932	89453		...	...
08-11	All Models with Freightliner TufTrac Rear Air Suspension	16-15770-000		...	...	O|O	85956	...
		1615770000		...	...	O|O	85956	...
		481700125969		...	...	O|O	85956	...
09-11	Models with 12000 to 13300 lb Taperleaf Front Suspension	10-13809-000	O|O	85958	...		...	...
		1013809000	O|O	85958	...		...	...
		SDA471700003920	O|O	85958	...		...	...
88-11	Models with Convoluted Spring Air Suspension	16-12117-000		...	...	O|O	85007	...
		16-18705-000		...	...	O|O	85007	...
		665236		...	...	O|O	85007	...
		1612117000		...	...	O|O	85007	...
		1618705000		...	...	O|O	85007	...
		471700002990		...	...	O|O	85007	...
88-11	Models with O.E.M. Number	10-12030-002	O|O	85320	89429		...	...
		10-12032-000	O|O	85320	89429		...	...
		10-12032-001	O|O	85320	89429		...	...
		10-12032-002	O|O	85320	89429		...	...
		10-12032-003	O|O	85320	89429		...	...
		10-12032-004	O|O	85320	89429		...	...
		1201-1043	O|O	83025				

FREIGHTLINER (CONT'D)

FLD120 (cont'd)

Year Ano Année	Model Modelo Modle	OEM #		Front Fleetline	Front GasSLX		Rear Fleetline	Rear GasSLX
88-11	Models with O.E.M. Number	1201-1044	○|○	83025				
		1202-1043	○|○	83025				
		1202-1044	○|○	83025				
		12011043	○|○	83025				
		12011044	○|○	83025				
		12021043	○|○	83025				
		12021044	○|○	83025				
		1012030002	○|○	85320	89429		...	...
		1012032000	○|○	85320	89429		...	...
		1012032001	○|○	85320	89429		...	...
		1012032002	○|○	85320	89429		...	...
		1012032003	○|○	85320	89429		...	...
		1012032004	○|○	85320	89429		...	...
91-11	Sleeper Cab models with Air Suspension	18-29846-000	○|○	83009				
		1829846000	○|○	83009				
95-11	Models with FAS II (40,000 lb) Rear Air Suspension	16-13957-000		...	...	○|○	85724	89443
		16-15817-000		...	...	○|○	85724	89443
		680339		...	...	○|○	85724	89443
		680611		...	...	○|○	85724	89443
		1613957000		...	...	○|○	85724	89443
		1615817000		...	...	○|○	85724	89443

FLD120SD

05-08	Models with 12000 lb Taperleaf Front Suspension	10-13021-000	○|○	85918	89449		...	...
		10-13063-000	○|○	85918	89449		...	...
		10-13211-000	○|○	85918	89449		...	...
		10-13634-000	○|○	85918	89449		...	...
		1013021000	○|○	85918	89449		...	...
		1013063000	○|○	85918	89449		...	...
		1013211000	○|○	85918	89449		...	...
		1013634000	○|○	85918	89449		...	...
		471700000449	○|○	85918	89449		...	...
		471700131155	○|○	85918	89449		...	...
05-12	Models with Convoluted Spring Air Suspension	16-12117-000		...	...	○|○	85007	...
		16-18705-000		...	...	○|○	85007	...
		665236		...	...	○|○	85007	...
		1612117000		...	...	○|○	85007	...
		1618705000		...	...	○|○	85007	...
		471700002990		...	...	○|○	85007	...
05-12	Models with FAS II (40,000 lb) Rear Air Suspension	16-13957-000		...	...	○|○	85724	89443
		16-15817-000		...	...	○|○	85724	89443
		680339		...	...	○|○	85724	89443
		680611		...	...	○|○	85724	89443
		1613957000		...	...	○|○	85724	89443
		1615817000		...	...	○|○	85724	89443
05-12	Models with Hendrickson Front Airtek	58913-003	○|○	85932	89453		...	...
		58913-003L	○|○	85932	89453		...	...
		58913-012	○|○	85932	89453		...	...
		58913-012L	○|○	85932	89453		...	...
		58913003	○|○	85932	89453		...	...
		58913003L	○|○	85932	89453		...	...
		58913012	○|○	85932	89453		...	...
		58913012L	○|○	85932	89453		...	...
		471700006269	○|○	85932	89453		...	...

FREIGHTLINER (CONT'D)

FLD120SD (cont'd)

Year Ano Année	Model Modelo Modle	OEM #		Front			Rear	
				Fleetline	GasSLX		Fleetline	GasSLX
05-12	Models with Hendrickson Front Airtek	471700131331	O|O	85932	89453		...	...
05-12	Models with O.E.M. Number	10-12030-002	O|O	85320	89429		...	...
		10-12032-000	O|O	85320	89429		...	...
		10-12032-001	O|O	85320	89429		...	...
		10-12032-002	O|O	85320	89429		...	...
		10-12032-003	O|O	85320	89429		...	...
		10-12032-004	O|O	85320	89429		...	...
		1012030002	O|O	85320	89429		...	...
		1012032000	O|O	85320	89429		...	...
		1012032001	O|O	85320	89429		...	...
		1012032002	O|O	85320	89429		...	...
		1012032003	O|O	85320	89429		...	...
		1012032004	O|O	85320	89429		...	...
08-12	All Models with Freightliner TufTrac Rear Air Suspension	16-15770-000		...	...	O|O	85956	...
		1615770000		...	...	O|O	85956	...
		481700125969		...	...	O|O	85956	...
09-12	Models with 12000 to 13300 lb Taperleaf Front Suspension	10-13809-000	O|O	85958	...		...	...
		1013809000	O|O	85958	...		...	...
		SDA471700003920	O|O	85958	...		...	...
2003	Models with 12000 lb Taperleaf Front Suspension	10-13021-000	O|O	85918	89449		...	...
		10-13063-000	O|O	85918	89449		...	...
		10-13211-000	O|O	85918	89449		...	...
		10-13634-000	O|O	85918	89449		...	...
		1013021000	O|O	85918	89449		...	...
		1013063000	O|O	85918	89449		...	...
		1013211000	O|O	85918	89449		...	...
		1013634000	O|O	85918	89449		...	...
		471700000449	O|O	85918	89449		...	...
		471700131155	O|O	85918	89449		...	...
2003	Models with Convoluted Spring Air Suspension	16-12117-000		...	...	O|O	85007	...
		16-18705-000		...	...	O|O	85007	...
		665236		...	...	O|O	85007	...
		1612117000		...	...	O|O	85007	...
		1618705000		...	...	O|O	85007	...
		471700002990		...	...	O|O	85007	...
2003	Models with FAS II (40,000 lb) Rear Air Suspension	16-13957-000		...	...	O|O	85724	89443
		16-15817-000		...	...	O|O	85724	89443
		680339		...	...	O|O	85724	89443
		680611		...	...	O|O	85724	89443
		1613957000		...	...	O|O	85724	89443
		1615817000		...	...	O|O	85724	89443
2003	Models with Hendrickson Front Airtek	58913-003	O|O	85932	89453		...	...
		58913-003L	O|O	85932	89453		...	...
		58913-012	O|O	85932	89453		...	...
		58913-012L	O|O	85932	89453		...	...
		58913003	O|O	85932	89453		...	...
		58913003L	O|O	85932	89453		...	...
		58913012	O|O	85932	89453		...	...
		58913012L	O|O	85932	89453		...	...
		471700006269	O|O	85932	89453		...	...
		471700131331	O|O	85932	89453		...	...
2003	Models with O.E.M. Number	10-12030-002	O|O	85320	89429		...	...
		10-12032-000	O|O	85320	89429		...	...
		10-12032-001	O|O	85320	89429		...	...

Year Ano Année	Model Modelo Modle	OEM #		Front			Rear	
				Fleetline	GasSLX		Fleetline	GasSLX
FREIGHTLINER (CONT'D)								
FLD120SD (cont'd)								
2003	Models with O.E.M. Number	10-12032-002	○|○	**85320**	89429		...	...
		10-12032-003	○|○	**85320**	89429		...	...
		10-12032-004	○|○	**85320**	89429		...	...
		1012030002	○|○	**85320**	89429		...	...
		1012032000	○|○	**85320**	89429		...	...
		1012032001	○|○	**85320**	89429		...	...
		1012032002	○|○	**85320**	89429		...	...
		1012032003	○|○	**85320**	89429		...	...
		1012032004	○|○	**85320**	89429		...	...
FLD132								
05-08	Models with 12000 lb Taperleaf Front Suspension	10-13021-000	○|○	**85918**	89449		...	...
		10-13063-000	○|○	**85918**	89449		...	...
		10-13211-000	○|○	**85918**	89449		...	...
		10-13634-000	○|○	**85918**	89449		...	...
		1013021000	○|○	**85918**	89449		...	...
		1013063000	○|○	**85918**	89449		...	...
		1013211000	○|○	**85918**	89449		...	...
		1013634000	○|○	**85918**	89449		...	...
		471700000449	○|○	**85918**	89449		...	...
		471700131155	○|○	**85918**	89449		...	...
03-11	Models with Convoluted Spring Air Suspension	16-12117-000		...	...	○|○	**85007**	...
		16-18705-000		...	...	○|○	**85007**	...
		665236		...	...	○|○	**85007**	...
		1612117000		...	...	○|○	**85007**	...
		1618705000		...	...	○|○	**85007**	...
		471700002990		...	...	○|○	**85007**	...
03-11	Models with FAS II (40,000 lb) Rear Air Suspension	16-13957-000		...	...	○|○	**85724**	89443
		16-15817-000		...	...	○|○	**85724**	89443
		680339		...	...	○|○	**85724**	89443
		680611		...	...	○|○	**85724**	89443
		1613957000		...	...	○|○	**85724**	89443
		1615817000		...	...	○|○	**85724**	89443
03-11	Models with Hendrickson Front Airtek	58913-003	○|○	**85932**	89453		...	...
		58913-003L	○|○	**85932**	89453		...	...
		58913-012	○|○	**85932**	89453		...	...
		58913-012L	○|○	**85932**	89453		...	...
		58913003	○|○	**85932**	89453		...	...
		58913003L	○|○	**85932**	89453		...	...
		58913012	○|○	**85932**	89453		...	...
		58913012L	○|○	**85932**	89453		...	...
		471700006269	○|○	**85932**	89453		...	...
		471700131331	○|○	**85932**	89453		...	...
03-11	Models with O.E.M. Number	10-12030-002	○|○	**85320**	89429		...	...
		10-12032-000	○|○	**85320**	89429		...	...
		10-12032-001	○|○	**85320**	89429		...	...
		10-12032-002	○|○	**85320**	89429		...	...
		10-12032-003	○|○	**85320**	89429		...	...
		10-12032-004	○|○	**85320**	89429		...	...
		1012030002	○|○	**85320**	89429		...	...
		1012032000	○|○	**85320**	89429		...	...
		1012032001	○|○	**85320**	89429		...	...
		1012032002	○|○	**85320**	89429		...	...
		1012032003	○|○	**85320**	89429		...	...

APPLICATION GUIDE - TRUCKS, TRAILERS AND BUSES

Year Ano Année	Model Modelo Modle	OEM #		Front			Rear	
				Fleetline	GasSLX		Fleetline	GasSLX

FREIGHTLINER (CONT'D)

FLD132 (cont'd)

03-11	Models with O.E.M. Number	1012032004	O|O	**85320**	**89429**		...	...
08-11	All Models with Freightliner TufTrac Rear Air Suspension	16-15770-000		...	...	O|O	**85956**	...
		1615770000		...	...	O|O	**85956**	...
		481700125969		...	...	O|O	**85956**	...
09-11	Models with 12000 to 13300 lb Taperleaf Front Suspension	10-13809-000	O|O	**85958**	...		...	...
		1013809000	O|O	**85958**	...		...	...
		SDA471700003920	O|O	**85958**	...		...	...
2001	Models with Convoluted Spring Air Suspension	16-12117-000		...	...	O|O	**85007**	...
		16-18705-000		...	...	O|O	**85007**	...
		665236		...	...	O|O	**85007**	...
		1612117000		...	...	O|O	**85007**	...
		1618705000		...	...	O|O	**85007**	...
		471700002990		...	...	O|O	**85007**	...
2001	Models with FAS II (40,000 lb) Rear Air Suspension	16-13957-000		...	...	O|O	**85724**	**89443**
		16-15817-000		...	...	O|O	**85724**	**89443**
		680339		...	...	O|O	**85724**	**89443**
		680611		...	...	O|O	**85724**	**89443**
		1613957000		...	...	O|O	**85724**	**89443**
		1615817000		...	...	O|O	**85724**	**89443**
2001	Models with O.E.M. Number	10-12030-002	O|O	**85320**	**89429**		...	...
		10-12032-000	O|O	**85320**	**89429**		...	...
		10-12032-001	O|O	**85320**	**89429**		...	...
		10-12032-002	O|O	**85320**	**89429**		...	...
		10-12032-003	O|O	**85320**	**89429**		...	...
		10-12032-004	O|O	**85320**	**89429**		...	...
		1012030002	O|O	**85320**	**89429**		...	...
		1012032000	O|O	**85320**	**89429**		...	...
		1012032001	O|O	**85320**	**89429**		...	...
		1012032002	O|O	**85320**	**89429**		...	...
		1012032003	O|O	**85320**	**89429**		...	...
		1012032004	O|O	**85320**	**89429**		...	...

M2

05-15	Models with Freightliner Low Profile Rear Air Suspension (18,000 to 40,000 lb)	16-14259-000		...	...	O|O	**85331**	...
		16-18706-000		...	...	O|O	**85331**	...
		680511		...	...	O|O	**85331**	...
		1614259000		...	...	O|O	**85331**	...
		1618706000		...	...	O|O	**85331**	...
		471700002992		...	...	O|O	**85331**	...
05-21	Models with FAS II (40,000 lb) Rear Air Suspension	16-15817-000		...	...	O|O	**85724**	**89443**
		16-18708-000		...	...	O|O	**85724**	**89443**
		680611		...	...	O|O	**85724**	**89443**
		1615817000		...	...	O|O	**85724**	**89443**
		1618708000		...	...	O|O	**85724**	**89443**
		471700002809		...	...	O|O	**85724**	**89443**
		481700006848		...	...	O|O	**85724**	**89443**
		SDA471700002809		...	...	O|O	**85724**	**89443**
05-21	Models with Freightliner TufTrac Rear Air Suspension	16-15770-000		...	...	O|O	**85956**	...
		1615770000		...	...	O|O	**85956**	...
		481700125969		...	...	O|O	**85956**	...
05-21	Models with Hendrickson HMX 400/460 Haulmax with 16.5" Saddle	60680-004		...	...		**83143**	...
		60680-004L		...	...		**83143**	...
		60680004		...	...		**83143**	...
		60680004L		...	...		**83143**	...

FREIGHTLINER (CONT'D)

M2 (cont'd)

Year Ano Année	Model Modelo Modle	OEM #	Front Fleetline	Front GasSLX		Rear Fleetline	Rear GasSLX
05-21	Models with Hendrickson HMX 400/460 Haulmax with 16.5" Saddle	H60680004	...	...		83143	...
05-21	Models with Hendrickson HMX 400/460 Haulmax with 17.5" & 18.5" Saddle	60680-005	...	...		83142	...
		60680-005L	...	...		83142	...
		60680005	...	...		83142	...
		60680005L	...	...		83142	...
		HDR60680-005	...	...		83142	...
		HDR60680005	...	...		83142	...
05-21	Models with Rear 52" Spring ,10000 lb - 15000 lb	16-16486-000	...	...	−|O	83134	...
		16-18710-000	...	...	−|O	83134	...
		1616486000	...	...	−|O	83134	...
		1618710000	...	...	−|O	83134	...
		471700002995	...	...	−|O	83134	...
05-21	Models with Rear 52" Spring ,18000 lb - 23000 lb	16-16442-000	...	...	−|O	83134	...
		16-18709-000	...	...	−|O	83134	...
		1616442000	...	...	−|O	83134	...
		1618709000	...	...	−|O	83134	...
		471700002994	...	...	−|O	83134	...
05-21	Models with Rear 60" Spring ,18000 lb - 23000 lb	16-15765-000	...	...	−|O	85921	...
		16-18707-000	...	...	−|O	85921	...
		1615765000	...	...	−|O	85921	...
		1618707000	...	...	−|O	85921	...
		471700002993	...	...	−|O	85921	...
05-21	Models with Rear 10000 lb - 15000 lb Low Profile AirLiner	16-16577-000	...	...	O|O	85335	...
		16-18711-000	...	...	O|O	85335	...
		1616577000	...	...	O|O	85335	...
		1618711000	...	...	O|O	85335	...
		471700002996	...	...	O|O	85335	...

M2 100

02-10	Models with FAS II (40,000 lb) Rear Air Suspension	16-15817-000	...	...	O|O	85724	89443
		16-18708-000	...	...	O|O	85724	89443
		680611	...	...	O|O	85724	89443
		1615817000	...	...	O|O	85724	89443
		1618708000	...	...	O|O	85724	89443
		471700002809	...	...	O|O	85724	89443
		481700006848	...	...	O|O	85724	89443
		SDA471700002809	...	...	O|O	85724	89443
02-10	Models with Freightliner Low Profile Rear Air Suspension (18,000 to 40,000 lb)	16-14259-000	...	...	O|O	85331	...
		16-18706-000	...	...	O|O	85331	...
		680511	...	...	O|O	85331	...
		1614259000	...	...	O|O	85331	...
		1618706000	...	...	O|O	85331	...
		471700002992	...	...	O|O	85331	...
02-10	Models with Freightliner TufTrac Rear Air Suspension	16-15770-000	...	...	O|O	85956	...
		1615770000	...	...	O|O	85956	...
		481700125969	...	...	O|O	85956	...
02-10	Models with Hendrickson HMX 400/460 Haulmax with 16.5" Saddle	60680-004	...	...		83143	...
		60680-004L	...	...		83143	...
		60680004	...	...		83143	...
		60680004L	...	...		83143	...
		H60680004	...	...		83143	...
02-10	Models with Hendrickson HMX 400/460 Haulmax with 17.5" & 18.5" Saddle	60680-005	...	...		83142	...
		60680-005L	...	...		83142	...
		60680005	...	...		83142	...

FREIGHTLINER (CONT'D)

M2 100 (cont'd)

Year Ano Année	Model Modelo Modle	OEM #		Front			Rear	
				Fleetline	GasSLX		Fleetline	GasSLX
02-10	Models with Hendrickson HMX 400/460 Haulmax with 17.5" & 18.5" Saddle	60680005L		...	...		83142	...
		HDR60680-005		...	...		83142	...
		HDR60680005		...	...		83142	...
02-10	Models with Rear 52" Spring ,10000 lb - 15000 lb	16-16486-000		...	...	−|O	83134	...
		16-18710-000		...	...	−|O	83134	...
		1616486000		...	...	−|O	83134	...
		1618710000		...	...	−|O	83134	...
		471700002995		...	...	−|O	83134	...
02-10	Models with Rear 52" Spring ,18000 lb - 23000 lb	16-16442-000		...	...	−|O	83134	...
		16-18709-000		...	...	−|O	83134	...
		1616442000		...	...	−|O	83134	...
		1618709000		...	...	−|O	83134	...
		471700002994		...	...	−|O	83134	...
02-10	Models with Rear 60" Spring ,18000 lb - 23000 lb	16-15765-000		...	...	−|O	85921	...
		16-18707-000		...	...	−|O	85921	...
		1615765000		...	...	−|O	85921	...
		1618707000		...	...	−|O	85921	...
		471700002993		...	...	−|O	85921	...
02-10	Models with Rear 10000 lb - 15000 lb Low Profile AirLiner	16-16577-000		...	...	O|O	85335	...
		16-18711-000		...	...	O|O	85335	...
		1616577000		...	...	O|O	85335	...
		1618711000		...	...	O|O	85335	...
		471700002996		...	...	O|O	85335	...

M2 106

02-08	Models with 6000 to 9000 lb Front axle	10-12388-000	O|O	85920	89503		...	...
		1012388000	O|O	85920	89503		...	...
02-08	Models with 10000 to 12000 lb. Taper-leaf Spring Suspension	10-12390-000	O|O	85920	89503		...	...
		1012390000	O|O	85920	89503		...	...
02-15	Models with Freightliner Low Profile Rear Air Suspension (18,000 to 40,000 lb)	16-14259-000		...	...	O|O	85331	...
		16-18706-000		...	...	O|O	85331	...
		680511		...	...	O|O	85331	...
		1614259000		...	...	O|O	85331	...
		1618706000		...	...	O|O	85331	...
		471700002992		...	...	O|O	85331	...
02-22	Day Cab Models with Spring Suspensions	18-47350-000	O|O	83040				
		18-60766-000	O|O	83040				
		1847350000	O|O	83040				
		1860766000	O|O	83040				
		814903003482	O|O	83040				
02-23	Models with FAS II (40,000 lb) Rear Air Suspension	16-15817-000		...	...	O|O	85724	89443
		16-18708-000		...	...	O|O	85724	89443
		680611		...	...	O|O	85724	89443
		1615817000		...	...	O|O	85724	89443
		1618708000		...	...	O|O	85724	89443
		471700002809		...	...	O|O	85724	89443
		481700006848		...	...	O|O	85724	89443
		SDA471700002809		...	...	O|O	85724	89443
02-23	Models with Freightliner TufTrac Rear Air Suspension	16-15770-000		...	...	O|O	85956	...
		1615770000		...	...	O|O	85956	...
		481700125969		...	...	O|O	85956	...
02-23	Models with Hendrickson HMX 400/460 Haulmax with 16.5" Saddle	60680-004		...	...		83143	...
		60680-004L		...	...		83143	...
		60680004		...	...		83143	...

FREIGHTLINER (CONT'D)

M2 106 (cont'd)

Year Ano Année	Model Modelo Modle	OEM #	Front Fleetline	Front GasSLX	Rear Fleetline	Rear GasSLX
02-23	Models with Hendrickson HMX 400/460 Haulmax with 16.5" Saddle	60680004L	...	...	83143	...
		H60680004	...	...	83143	...
02-23	Models with Hendrickson HMX 400/460 Haulmax with 17.5" & 18.5" Saddle	60680-005	...	...	83142	...
		60680-005L	...	...	83142	...
		60680005	...	...	83142	...
		60680005L	...	...	83142	...
		HDR60680-005	...	...	83142	...
		HDR60680005	...	...	83142	...
02-23	Models with Rear 52" Spring ,10000 lb - 15000 lb	16-16486-000	...	...	83134	...
		16-18710-000	...	...	83134	...
		1616486000	...	...	83134	...
		1618710000	...	...	83134	...
		471700002995	...	...	83134	...
02-23	Models with Rear 52" Spring ,18000 lb - 23000 lb	16-16442-000	...	...	83134	...
		16-18709-000	...	...	83134	...
		1616442000	...	...	83134	...
		1618709000	...	...	83134	...
		471700002994	...	...	83134	...
02-23	Models with Rear 60" Spring ,18000 lb - 23000 lb	16-15765-000	...	...	85921	...
		16-18707-000	...	...	85921	...
		1615765000	...	...	85921	...
		1618707000	...	...	85921	...
		471700002993	...	...	85921	...
02-23	Models with Rear 10000 lb - 15000 lb Low Profile AirLiner	16-16577-000	...	...	85335	...
		16-18711-000	...	...	85335	...
		1616577000	...	...	85335	...
		1618711000	...	...	85335	...
		471700002996	...	...	85335	...
02-23	Models with Reyco 79KB Rear Steel Spring Suspension	16725-01	...	...	83126	89430
		19495-01	...	...	83126	89430
		1672501	...	...	83126	89430
		1949501	...	...	83126	89430
09-23	Models with 8000 to 16000 lb Front Axle and Taperleaf Spring	10-13760-000	85959	...	...	...
		1013760000	85959	...	...	...
		471700002991	85959	...	...	...
		SDA471700002991	85959	...	...	...

M2 112

Year Ano Année	Model Modelo Modle	OEM #	Front Fleetline	Front GasSLX	Rear Fleetline	Rear GasSLX
03-15	Models with Freightliner Low Profile Rear Air Suspension (18,000 to 40,000 lb)	16-14259-000	...	...	85331	...
		16-18706-000	...	...	85331	...
		680511	...	...	85331	...
		1614259000	...	...	85331	...
		1618706000	...	...	85331	...
		471700002992	...	...	85331	...
03-22	Crew Cab Models with O.E.M. Number	18-41762-000	83038			
		18-60764-000	83038			
		1841762000	83038			
		1860764000	83038			
		814903003528	83038			
03-22	Day Cab Models with Leaf Spring Suspensions	18-47349-000	83039			
		18-60767-000	83039			
		1847349000	83039			
		1860767000	83039			
		814903003483	83039			

FREIGHTLINER (CONT'D)

M2 112 (cont'd)

Year / Ano / Année	Model / Modelo / Modle	OEM #		Front			Rear	
				Fleetline	GasSLX		Fleetline	GasSLX
09-22	Models with 12000 lb to 20000 Front Axle	10-13809-000	O|O	**85958**	...		...	...
		1013809000	O|O	**85958**	...		...	...
		471700003920	O|O	**85958**	...		...	...
03-23	Models with 12000 lb to 20000 Front Axle	10-12703-000	O|O	**85918**	**89449**		...	...
		10-13211-000	O|O	**85918**	**89449**		...	...
		10-13634-000	O|O	**85918**	**89449**		...	...
		1012703000	O|O	**85918**	**89449**		...	...
		1013211000	O|O	**85918**	**89449**		...	...
		1013634000	O|O	**85918**	**89449**		...	...
		471700000449	O|O	**85918**	**89449**		...	...
		471700131155	O|O	**85918**	**89449**		...	...
03-23	Models with FAS II (40,000 lb) Rear Air Suspension	16-15817-000		...	...	O|O	**85724**	**89443**
		16-18708-000		...	...	O|O	**85724**	**89443**
		680611		...	...	O|O	**85724**	**89443**
		1615817000		...	...	O|O	**85724**	**89443**
		1618708000		...	...	O|O	**85724**	**89443**
		471700002809		...	...	O|O	**85724**	**89443**
		481700006848		...	...	O|O	**85724**	**89443**
		SDA471700002809		...	...	O|O	**85724**	**89443**
03-23	Models with Freightliner TufTrac Rear Air Suspension	16-15770-000		...	...	O|O	**85956**	...
		1615770000		...	...	O|O	**85956**	...
		481700125969		...	...	O|O	**85956**	...
03-23	Models with Hendrickson HMX 400/460 Haulmax with 16.5" Saddle	60680-004		...	...		**83143**	...
		60680-004L		...	...		**83143**	...
		60680004		...	...		**83143**	...
		60680004L		...	...		**83143**	...
		H60680004		...	...		**83143**	...
03-23	Models with Hendrickson HMX 400/460 Haulmax with 17.5" & 18.5" Saddle	60680-005		...	...		**83142**	...
		60680-005L		...	...		**83142**	...
		60680005		...	...		**83142**	...
		60680005L		...	...		**83142**	...
		HDR60680-005		...	...		**83142**	...
		HDR60680005		...	...		**83142**	...
03-23	Models with Rear 52" Spring ,10000 lb - 15000 lb	16-16486-000		...	...	−|O	**83134**	...
		16-18710-000		...	...	−|O	**83134**	...
		1616486000		...	...	−|O	**83134**	...
		1618710000		...	...	−|O	**83134**	...
		471700002995		...	...	−|O	**83134**	...
03-23	Models with Rear 52" Spring ,18000 lb - 23000 lb	16-16442-000		...	...	−|O	**83134**	...
		16-18709-000		...	...	−|O	**83134**	...
		1616442000		...	...	−|O	**83134**	...
		1618709000		...	...	−|O	**83134**	...
		471700002994		...	...	−|O	**83134**	...
03-23	Models with Rear 60" Spring ,18000 lb - 23000 lb	16-15765-000		...	...	−|O	**85921**	...
		16-18707-000		...	...	−|O	**85921**	...
		1615765000		...	...	−|O	**85921**	...
		1618707000		...	...	−|O	**85921**	...
		471700002993		...	...	−|O	**85921**	...
03-23	Models with Rear 10000 lb - 15000 lb Low Profile AirLiner	16-16577-000		...	...	O|O	**85335**	...
		16-18711-000		...	...	O|O	**85335**	...
		1616577000		...	...	O|O	**85335**	...
		1618711000		...	...	O|O	**85335**	...
		471700002996		...	...	O|O	**85335**	...

MT45

98-20	Models with O.E.M. Number	16-15394-000		...	...		**83120**	...

APPLICATION GUIDE - TRUCKS, TRAILERS AND BUSES

Year Ano Année	Model Modelo Modle	OEM #		Front			Rear	
				Fleetline	GasSLX		Fleetline	GasSLX
FREIGHTLINER (CONT'D)								
MT45 (cont'd)								
98-20	Models with O.E.M. Number	1615394000		...	...		**83120**	...
99-20	MT45 Step Van - w/35" Front Spring	16-15473-000	○|○	**83157**	...		...	...
		16-15474-000	○|○	**83157**	...		...	...
		1615473000	○|○	**83157**	...		...	...
		1615474000	○|○	**83157**	...		...	...
99-20	MT45 Step Van - w/38" Front Spring	16-15475-000	○|○	**83164**	...		...	...
		1615475000	○|○	**83164**	...		...	...
98-22	Step Van Models with O.E.M. Number	16-19138-000	○|○	**85058**	**89431**		...	...
		16-20628-000	○|○	**85058**	**89431**		...	...
		16-22004-000	○|○	**85058**	**89431**		...	...
		1619138000	○|○	**85058**	**89431**		...	...
		471700003011	○|○	**85058**	**89431**		...	...
		471700011302	○|○	**85058**	**89431**		...	...
98-22	Walkin Step Van Models (18 Foot) with O.E.M. Number	16-15064-000		...	...		**83154**	...
		16-15436-000		...	...		**83154**	...
		16-16542-000		...	...		**83154**	...
		16-20552-000		...	...		**83154**	...
		1615064000		...	...		**83154**	...
		1615436000		...	...		**83154**	...
		1616542000		...	...		**83154**	...
		1620552000		...	...		**83154**	...
		471700010991		...	...		**83154**	...
MT55								
99-11	Models with O.E.M. Number	16-15705-000		...	...		**83120**	...
		16-15934-000		...	...		**83120**	...
		16-16262-000		...	...		**83120**	...
		1615705000		...	...		**83120**	...
		1615934000		...	...		**83120**	...
		1616262000		...	...		**83120**	...
99-20	MT55 Step Van - w/35" Front Spring	16-15473-000	○|○	**83157**	...		...	...
		16-15474-000	○|○	**83157**	...		...	...
		1615473000	○|○	**83157**	...		...	...
		1615474000	○|○	**83157**	...		...	...
99-20	MT55 Step Van - w/38" Front Spring	16-15475-000	○|○	**83164**	...		...	...
		1615475000	○|○	**83164**	...		...	...
99-22	Models with Freightliner Low Profile Rear Air Suspension	16-18706-000		...	...	○|○	**85331**	...
		1618706000		...	...	○|○	**85331**	...
99-22	MT55 Chassis with O.E.M. Number	16-17759-000	○|○	**85919**	...		...	...
		16-20632-000	○|○	**85919**	...		...	...
		1617759000	○|○	**85919**	...		...	...
		1620632000	○|○	**85919**	...		...	...
		471700000447	○|○	**85919**	...		...	...
ADDITIONAL APPLICATIONS								
	Models with 60" Sleeper w/ Link Bunkmate Model FRTS60-A	1202-1043	○|○	**83025**				
		12021043	○|○	**83025**				
	Models with Link Cab Suspension	1202-0042	○|○	**83025**				
		1202-0043	○|○	**83025**				
		1202-0044	○|○	**83025**				
		12020042	○|○	**83025**				
		12020043	○|○	**83025**				
		12020044	○|○	**83025**				
	Models with O.E.M. Number	18-44321-000	○|○	**83009**				

APPLICATION GUIDE - TRUCKS, TRAILERS AND BUSES

Year Ano Année	Model Modelo Modle	OEM #		Front			Rear	
				Fleetline	GasSLX		Fleetline	GasSLX
FREIGHTLINER (CONT'D)								
ADDITIONAL APPLICATIONS (cont'd)								
	Models with O.E.M. Number	18-45067-000	O|O	83034				
		18-60765-000	O|O	83038				
		18-60769-000	O|O	83009				
		18-60772-000	O|O	83026				
		18-60773-000		83027				
		654739	O|O	83009				
		654819	O|O	83001				
		654990	O|O	83038				
		659079	O|O	83040				
		659080	O|O	83039				
		659125	O|O	83047				
		659178	O|O	83038				
		1844321000	O|O	83009				
		1845067000	O|O	83034				
		1860765000	O|O	83038				
		1860769000	O|O	83009				
		1860772000	O|O	83026				
		1860773000		83027				
		814903003496	O|O	83009				
ARGOSY								
16-17	Models with 12000 lb Taperleaf Front Suspension	10-12703-000	O|O	85918	89449		...	...
		10-13634-000	O|O	85918	89449		...	...
		1012703000	O|O	85918	89449		...	...
		1013634000	O|O	85918	89449		...	...
		471700000449	O|O	85918	89449		...	...
16-17	Models with Freightliner FAS II Rear Air Suspension	16-13957-000		...	...	O|O	85724	89443
		16-15817-000		...	...	O|O	85724	89443
		680339		...	...	O|O	85724	89443
		680611		...	...	O|O	85724	89443
		1613957000		...	...	O|O	85724	89443
		1615817000		...	...	O|O	85724	89443
16-17	Models with Freightliner Low Profile Rear Air Suspension (18,000 to 40,000 lb)	16-14259-000		...	...	O|O	85331	...
		16-18706-000		...	...	O|O	85331	...
		680511		...	...	O|O	85331	...
		1614259000		...	...	O|O	85331	...
		1618706000		...	...	O|O	85331	...
		471700002992		...	...	O|O	85331	...
16-17	Models with Rear 10000 lb - 15000 lb Low Profile AirLiner	16-16577-000		...	...	O|O	85335	...
		16-18711-000		...	...	O|O	85335	...
		1616577000		...	...	O|O	85335	...
		1618711000		...	...	O|O	85335	...
		471700002996		...	...	O|O	85335	...
CENTURY CLASS								
	Models with O.E.M. Number	18-41762-000	O|O	83038				
		18-41762-001	O|O	83047				
		18-41762-002	O|O	83038				
		1841762000	O|O	83038				
		1841762001	O|O	83047				
		1841762002	O|O	83038				
CENTURY CLASS - C112, C120, CST112 & CST120								
	Models with Low Profile Front	10-12703-000	O|O	85918	89449		...	...

Year Ano Année	Model Modelo Modle	OEM #		Front			Rear	
				Fleetline	GasSLX		Fleetline	GasSLX
FREIGHTLINER (CONT'D)								
CENTURY CLASS - C112, C120, CST112 & CST120 (cont'd)								
	Models with Low Profile Front	1012703000	○|○	85918	89449		...	...
CLASSIC/CLASSICXL								
	Models with O.E.M. Number	10-12032-002	○|○	85320	89429		...	...
		10-12032-004	○|○	85320	89429		...	...
		70029	○|○	85308	89422		...	...
		680009	○|○	85302	89420		...	...
		1012032002	○|○	85320	89429		...	...
		1012032004	○|○	85320	89429		...	...
COLUMBIA								
	Models with 12000 lb Taperleaf Front Suspension	471700000470	○|○	85918	89449		...	...
	Models with O.E.M. Number	18-29846-000	○|○	83009				
		1829846000	○|○	83009				
FC70								
05-07	Models with 10,000 to 18,000 lb Suspension	10-13759-000	○|○	85006	...		...	...
		1013759000	○|○	85006	...		...	...
		6803230300	○|○	85006	...		...	...
		471700003009	○|○	85006	...		...	...
		GBL665538	○|○	85006	...		...	...
05-07	Models with 6000 to 9000 lb Front Axle	654654	○|○	85043	...		...	...
		6803230200	○|○	85043	...		...	...
05-07	Models with Freightliner FAS II Rear Air Suspension	16-13957-000		...	...	○|○	85724	89443
		16-15817-000		...	...	○|○	85724	89443
		680339		...	...	○|○	85724	89443
		680611		...	...	○|○	85724	89443
		1613957000		...	...	○|○	85724	89443
		1615817000		...	...	○|○	85724	89443
FL50, 60, 70, 80 - BUSINESS CLASS								
	FAS Airliner, Single / Tandem Past Production	16-11133-000		...	...	○|○	85007	...
		1611133000		...	...	○|○	85007	...
FL112 CONVENTIONAL								
97-99	FL112 Business Class Day Cab Tractors with Link Cabmate Model FRT112DC	1202-1044	○|○	83025				
		12021044	○|○	83025				
FLC - 112 & 120 CONVENTIONAL TRACTORS								
	Models with Link Cabmate FRTC120-A or FRTC120-AW Air Suspension	1201-0012	○|○	83023				
		1202-0012	○|○	83023				
		12010012	○|○	83023				
		12020012	○|○	83023				
FLC & FLD SERIES - 112 & 120 CONV. TRUCK & TRACTOR								
	Conventional Models with Airliner Rolling Lobe Spring Air Suspension To 1994	16-13947-000		...	...	–|○	85319	89428
		681-326-0400		...	...	–|○	85319	89428
		1613947000		...	...	–|○	85319	89428
		6813260400		...	...	–|○	85319	89428
	Conventional Models with Neway Tag Axle Air Suspension	90044162		...	...	○|○	83128	89436
FLD112								
	D2 Cab	18-41762-001	○|○	83047				

APPLICATION GUIDE - TRUCKS, TRAILERS AND BUSES

Year Ano Année	Model Modelo Modle	OEM #		Front			Rear	
				Fleetline	GasSLX		Fleetline	GasSLX
FREIGHTLINER (CONT'D)								
FLD112 (cont'd)								
	D2 Cab	18-60765-001	○|○	**83047**				
		1841762001	○|○	**83047**				
		1860765001	○|○	**83047**				
		814903003486	○|○	**83047**				
FLD120								
	D2 Cab	18-41762-001	○|○	**83047**				
		18-60765-001	○|○	**83047**				
		1841762001	○|○	**83047**				
		1860765001	○|○	**83047**				
		814903003486	○|○	**83047**				
LEGACY								
99-21	Models with FAS II Rear Air Suspension	16-15817-000		...	...	○|○	**85724**	89443
		680611		...	...	○|○	**85724**	89443
		1615817000		...	...	○|○	**85724**	89443
	Models with FAS II Rear Air Suspension To 1998	16-13957-000		...	...	○|○	**85724**	89443
		680339		...	...	○|○	**85724**	89443
		1613957000		...	...	○|○	**85724**	89443
	Models with O.E.M. Number	681-323-0900	–|○	**85009**	...		...	...
		6813230900	–|○	**85009**	...		...	...
L - LINE 8500 SERIES - CONVENTIONAL CAB								
	LT 8500 Models with Freightliner TufTrac Rear Air Suspension	16-15770-000		...	...	○|○	**85956**	...
		1615770000		...	...	○|○	**85956**	...
		481700125969		...	...	○|○	**85956**	...
L - LINE 9500 SERIES - CONVENTIONAL CAB								
	LT 9500 Models with Freightliner TufTrac Rear Air Suspension	16-15770-000		...	...	○|○	**85956**	...
		1615770000		...	...	○|○	**85956**	...
		481700125969		...	...	○|○	**85956**	...
M2 - BUSINESS CLASS								
	Models O.E.M. Number	10-13592-000	○|○	**85959**	...		...	...
		1013592000	○|○	**85959**	...		...	...
		471700000440	○|○	**85959**	...		...	...
	Additional O.E.M. Interchanges	10-13205-000	○|○	**85918**	89449		...	...
		681-323-1100	○|○	**85301**				
		680008	○|○	**85300 or 89419**				
		680017	○|○	**85302 or 89420**				
		1013205000	○|○	**85918**	89449		...	...
		6813231100	○|○	**85301**				
		471700131646	○|○	**85918**	89449		...	...
	Models with 7000 lb Front Suspension	10-13776-000	○|○	**85005**	89430		...	...
		1013776000	○|○	**85005**	89430		...	...
	Models with Neway Air Suspension with shock stamping	90045083		...	...	○|○	**85910**	...
	Models with O.E.M. Number	10-12046-000	○|○	**85320**	89429		...	...
		10-12396-000	○|○	**85918**	89449		...	...
		10-13051-001	○|○	**85005**	89430		...	...
		10-13859-000	○|○	**85005**	89430		...	...
		16-14577-000	○|○	**85043**	...		...	...
		16-14667-000		...	...	○|○	**85005**	89430
		16-14668-000		...	...	○|○	**83127**	...
		16-14669-000	○|○	**G63403**	...		...	...
		16-14759-000	○|○	**85000**	89436		...	...

FREIGHTLINER (CONT'D)

Year / Ano / Année	Model / Modelo / Modle	OEM #		Front			Rear	
				Fleetline	GasSLX		Fleetline	GasSLX
	Models with O.E.M. Number	16-15591-000		...	...	O|O	85043	...
		16-16765-000		...	...	O|O	85006	...
		16-16826-000	O|O	85043	...		...	...
		16-17211-000		...	...	O|O	85909	...
		16-17759-000		...	...	O|O	85919	...
		16-19138-000	O|O	85058	89431		...	...
		47902-13		...	...	O|O	83122	89406
		70042	O|O	85302	89420		...	...
		535228	O|O	85302	89420		...	...
		650224		...	...	O|O	83225	...
		654918	O|O	83118	...		...	...
		659060	O|O	85920	89503		...	...
		659062		...	...	–|O	83134	...
		659063		...	...	–|O	83134	...
		659300	O|O	85005	89430		...	...
		665409	–|O	85009	...		...	...
		671908	O|O	85918	89449		...	...
		671945	O|O	85920	89503		...	...
		671946		...	...	–|O	85921	...
		680009	O|O	85302	89420		...	...
		680442		...	...	–|O	85319	89428
		680651		...	...	O|O	85335	...
		680782	O|O	85302	89420		...	...
		3638112		...	...	O|O	G63183	...
		4036892	O|O	G63605	...		...	...
		4790213		...	...	O|O	83122	89406
		61300224	O|O	85918	89449		...	...
		61300240	O|O	85918	89449		...	...
		1012046000	O|O	85320	89429		...	...
		1012396000	O|O	85918	89449		...	...
		1013051001	O|O	85005	89430		...	...
		1013859000	O|O	85005	89430		...	...
		1614577000	O|O	85043	...		...	...
		1614667000		...	...	O|O	85005	89430
		1614668000		...	...	O|O	83127	...
		1614669000	O|O	G63403	...		...	...
		1614759000	O|O	85000	89436		...	...
		1615591000		...	...	O|O	85043	...
		1616765000		...	...	O|O	85006	...
		1616826000	O|O	85043	...		...	...
		1617211000		...	...	O|O	85909	...
		1617759000		...	...	O|O	85919	...
		1619138000	O|O	85058	89431		...	...
		6813230900	–|O	85009	...		...	...
		SDA471700000440	O|O	85959	...		...	...

FREIGHTLINER CUSTOM CHASSIS

BUS CHASSIS

97-08	F65 School bus chassis with 10,000 to 18,000 lb Suspension	10-13759-000	O|O	85006	...		...	...
		1013759000	O|O	85006	...		...	...
		6803230300	O|O	85006	...		...	...
		471700003009	O|O	85006	...		...	...
		GBL665538	O|O	85006	...		...	...
97-08	F65 School bus chassis with Taperleaf Spring	6803260000		...	...		83120	...
		GBL654725		...	...		83120	...

FREIGHTLINER CUSTOM CHASSIS (CONT'D)

BUS CHASSIS (cont'd)

Year / Ano / Année	Model / Modelo / Modle	OEM #		Front			Rear	
				Fleetline	GasSLX		Fleetline	GasSLX
09-12	Type C School bus chassis with O.E.M. Number	16-18713-000		...	...		85122	...
		1618713000		...	...		85122	...
		471700003070		...	...		85122	...
	FB Shuttle bus chassis with O.E.M. Number	16-16765-000	O|O	85006	...		...	...
		1616765000	O|O	85006	...		...	...
		471700131775	O|O	85006	...		...	...
	School Bus Chassis with 7,000 lb Suspension	10-13859-000	O|O	85005	89430		...	...
		1013859000	O|O	85005	89430		...	...
		471700005079	O|O	85005	89430		...	...
	Shuttle Bus Chassis	16-16082-000	O|O	85043	...		...	...
		1616082000	O|O	85043	...		...	...

FRED CHASSIS

06-08	Front - Engine Diesel Chassis (FRED Chassis)	16-18455-000	O|O	85918	89449		...	...
		1618455000	O|O	85918	89449		...	...
		471700002726	O|O	85918	89449		...	...

MB CHASSIS

	MB55 Chassis	16-17759-000		...	...	O|O	85919	...
		1617759000		...	...	O|O	85919	...
		471700000447		...	...	O|O	85919	...
	MB55 Models w/8000 lb. flat leaf front suspension	16-17684-000	O|O	85058	89431		...	...
		1617684000	O|O	85058	89431		...	...
	MB55 Shuttle bus w/8000 lb. flat leaf front suspension	16-15676-000	O|O	85058	89431		...	...
		1615676000	O|O	85058	89431		...	...
	MB Chassis (VIP bus)	16-16827-000		...	...	O|O	85331	...
		16-17760-000		...	...	O|O	85331	...
		1616827000		...	...	O|O	85331	...
		1617760000		...	...	O|O	85331	...
		471700131778		...	...	O|O	85331	...

MC CHASSIS

96-99	MC Chassis for Class A Motorhomes	654918	O|O	83118	...		...	...
		P117099		...	...		83120	...
		P117146	O|O	83118	...		...	...
	MC Chassis with Hendrickson Softtek Front Suspension	16-18094-000	O|O	85959	...		...	...
		1618094000	O|O	85959	...		...	...
		471700000466	O|O	85959	...		...	...
	MC Chassis with O.E.M. Number	16-18456-000		...	...	O|O	85959	...
		1618456000		...	...	O|O	85959	...
		471700002727		...	...	O|O	85959	...
	MC-L Chassis with 9,000 lb Suspension	16-18455-000	O|O	85918	89449		...	...
		1618455000	O|O	85918	89449		...	...
		471700002726	O|O	85918	89449		...	...

MP 14

	MP 14 Chassis	16-15475-000	O|O	83164	...		...	...
		1615475000	O|O	83164	...		...	...

MP 19

	MP 19 Chassis	16-15475-000	O|O	83164	...		...	...
		1615475000	O|O	83164	...		...	...

MT SERIES

	MT55 Models w/8000 lb. flat leaf front suspension	16-15676-000	O|O	85058	89431		...	...

FREIGHTLINER CUSTOM CHASSIS (CONT'D)

MT SERIES (cont'd)

Year Ano Année	Model Modelo Modle	OEM #		Front Fleetline	Front GasSLX		Rear Fleetline	Rear GasSLX
	MT55 Models w/8000 lb. flat leaf front suspension	16-17684-000	○|○	85058	89431		...	...
		1615676000	○|○	85058	89431		...	...
		1617684000	○|○	85058	89431		...	...
	MT55 Step Van with O.E.M. Number	16-15436-000		...	...		83154	...
		16-16542-000		...	...		83154	...
		1615436000		...	...		83154	...
		1616542000		...	...		83154	...
	Additional O.E.M. Interchanges	1745500	○|○	89430				
		1745500		...	...	○|○	89430	...
		66554540I	○|○	89430				
		66554540I		...	...	○|○	89430	...
	FedEx Trucks with O.E.M. Number	MAE16950	○|○	83118	...		...	...
		P117146	○|○	83118	...		...	...
	Fleetwood Motor Home with O.E.M. Number	GBL 651375	○|○	83119	...		...	...
		RW24285	○|○	83119	...		...	...
	M-Line Walk in Van with O.E.M. Number	MAE 16949		...	...		83120	...
		MAE 16950	○|○	83118	...		...	...
		P117099		...	...		83120	...
		P117146	○|○	83118	...		...	...
	Models with O.E.M. Number	16-14794-000		...	...		83154	...
		16-15805-000		...	...		83120	...
		16-16083-000		...	...	○|○	85331	...
		16-16836-000		...	...		83154	...
		654953	○|○	85058	89431		...	...
		659227	○|○	85058	89431		...	...
		1614794000		...	...		83154	...
		1615805000		...	...		83120	...
		1616083000		...	...	○|○	85331	...
		1616836000		...	...		83154	...
		GBL654918	○|○	83118	...		...	...
	Oshkosh Motor Home with O.E.M. Number	1398980	○|○	83127	...		...	...
	Step Van Models with O.E.M. Number	16-19138-000	○|○	85058	89431		...	...
		1619138000	○|○	85058	89431		...	...
		471700003011	○|○	85058	89431		...	...

VC CHASSIS

03-07	MotorHome Chassis with ZF - IFS Front Suspension (23,000 lb GVW & Higher)	16-18103-000	–|–	85900	...		...	...
		1618103000	–|–	85900	...		...	...
		481700000493	–|–	85900	...		...	...
03-07	VC Chassis - ADL200 Suspension w/ 20K Rear	16-16873-000		...	...	○|○	85029	...
		1616873000		...	...	○|○	85029	...
		471700131974		...	...	○|○	85029	...
93-07	VC Chassis - Neway AS-120 Front Air Suspension (Up To 22000 lb GVW)	16-16737-000	○|○	83160	...		...	...
		1616737000	○|○	83160	...		...	...
03-12	VC Chassis - ADL200 Suspension w/ 23,000 lb GVW & Higher	16-16736-000		...	...	○|○	85029	...
		1616736000		...	...	○|○	85029	...
		141700131809		...	...	○|○	85029	...

XB CHASSIS

	MotorHome Chassis with Neway AS-120, 10,500 lb Front Air Suspension	16-18075-000	○|○	83160	...		...	...
		141700000377	○|○	83160	...		...	...
	MotorHome Chassis with Neway AS-120, 12,000 lb Front Air Suspension	16-16874-000	○|○	83160	...		...	...
		16-18076-000	○|○	83160	...		...	...

Year Ano Année	Model Modelo Modle	OEM #		Front			Rear	
				Fleetline	GasSLX		Fleetline	GasSLX
FREIGHTLINER CUSTOM CHASSIS (CONT'D)								
XB CHASSIS (cont'd)								
	MotorHome Chassis with Neway AS-120, 12,000 lb Front Air Suspension	1616874000	O|O	**83160**	...		...	...
		1618076000	O|O	**83160**	...		...	...
		141700000378	O|O	**83160**	...		...	...
		141700131975	O|O	**83160**	...		...	...
XC CHASSIS								
03-07	MotorHome Chassis with ZF - IFS Front Suspension (23,000 lb GVW & Higher)	16-18103-000	−|−	**85900**	...		...	...
		1618103000	−|−	**85900**	...		...	...
		481700000493	−|−	**85900**	...		...	...
03-07	XC Chassis - ADL200 Suspension w/ 20K Rear	16-16873-000		...	...	O|O	**85029**	...
		1616873000		...	...	O|O	**85029**	...
		471700131974		...	...	O|O	**85029**	...
93-07	MotorHome Chassis with Neway AS-120 Front Air Suspension (Up To 22000 lb GVW)	16-16737-000	O|O	**83160**	...		...	...
		1616737000	O|O	**83160**	...		...	...
03-12	MotorHome Chassis with Neway AS-120 Front Air Suspension (23,000 lb GVW & Higher)	16-16737-000	O|O	**83160**	...		...	...
		16-16874-000	O|O	**83160**	...		...	...
		1616737000	O|O	**83160**	...		...	...
		1616874000	O|O	**83160**	...		...	...
		141700131810	O|O	**83160**	...		...	...
03-12	XC Chassis - ADL200 Suspension w/ 23,000 lb GVW & Higher	16-16736-000		...	...	O|O	**85029**	...
		1616736000		...	...	O|O	**85029**	...
		141700131809		...	...	O|O	**85029**	...
	MotorHome Chassis with Neway AS-120, 10,500 lb Front Air Suspension	16-18075-000	O|O	**83160**	...		...	...
		141700000377	O|O	**83160**	...		...	...
	MotorHome Chassis with Neway AS-120, 12,000 lb Front Air Suspension	16-16874-000	O|O	**83160**	...		...	...
		16-18076-000	O|O	**83160**	...		...	...
		1616874000	O|O	**83160**	...		...	...
		1618076000	O|O	**83160**	...		...	...
		141700000378	O|O	**83160**	...		...	...
		141700131975	O|O	**83160**	...		...	...
	MotorHome Chassis with ZF- IFS, 12,000 lb Front Air Suspension	16-17144-000	−|−	**85900**	...		...	...
		16-17361-000	−|−	**85900**	...		...	...
		1617144000	−|−	**85900**	...		...	...
		1617361000	−|−	**85900**	...		...	...
		481700000477	−|−	**85900**	...		...	...
		481700131919	−|−	**85900**	...		...	...
XCS CHASSIS								
00-02	XCS Chassis (22000 lb GVW) w/ O.E.M. Number	16-15592-000		...	...		**83154**	...
		16-15755-000	O|O	**85043**	...		...	...
		16-16043-000	O|O	**85043**	...		...	...
		1615592000		...	...		**83154**	...
		1615755000	O|O	**85043**	...		...	...
		1616043000	O|O	**85043**	...		...	...
01-02	XCS Chassis with Freightliner Rear Air Suspension	16-16093-000	O|O	**83160**	...		...	...
		1616093000	O|O	**83160**	...		...	...
FRUEHAUF								
	"L" Suspensions	UCD006216001		...	...	O|O	**83203**	**89436**
		UCD-006216-001		...	...	O|O	**83203**	**89436**
	"T" Suspensions	UCE1295901		...	...	O|O	**85300**	**89419**
		UCE-1295-901		...	...	O|O	**85300**	**89419**

APPLICATION GUIDE - TRUCKS, TRAILERS AND BUSES

Year Ano Année	Model Modelo Modle	OEM #		Front			Rear	
				Fleetline	GasSLX		Fleetline	GasSLX
FRUEHAUF (CONT'D)								
	"T" Suspensions With Drop Frame (NT Construction)	UCF8339001		...	...	○|○	85321	...
		UCF8339002		...	...	○|○	85321	...
		UCF-8339-001		...	...	○|○	85321	...
		UCF-8339-002		...	...	○|○	85321	...
	All with Air Suspension and O.E.M. Number	UCE12951		...	...	○|○	85300	89419
		UCE-1295-1		...	...	○|○	85300	89419
	All with Lift Axle	UCE93991		...	...	○|○	83122	89406
		UCE-9399-1		...	...	○|○	83122	89406
	Models with O.E.M. Number	144-5910		...	...	○|○	85300	89419
		680117		...	...	○|○	85300	89419
		680298		...	...	○|○	85321	...
		1445910		...	...	○|○	85300	89419
		UCA01113		...	...	○|○	85304	...
		UCA5431		...	...	○|○	85305	...
		UCA-01113		...	...	○|○	85304	...
		UCA-5431		...	...	○|○	85305	...
		UCD62161		...	...	○|○	83203	89436
		UCD-6216-1		...	...	○|○	83203	89436
		UCE29831		...	...	○|○	85322	...
		UCE-2983-1		...	...	○|○	85322	...
		UEY 1124-001		...	...	○|○	85030	89440
		UEY 1124001		...	...	○|○	85030	89440
	Model UCA-5431	5352858		...	...	○|○	85305	...
	Model W24T1 Air Ride	UCE2983000		...	...	○|○	85322	...
		UCE2983001		...	...	○|○	85322	...
		UCE-2983-000		...	...	○|○	85322	...
		UCE-2983-001		...	...	○|○	85322	...
	Tractor & Trailer Lift Axle with O.E.M. Number	5116-117		...	...	○|○	83122	89406
		5116117		...	...	○|○	83122	89406
FWD TRUCK								
	Models with O.E.M. Number	450739	○|○	85302	89420		...	...
GENERAL TRAILER CO								
	Additional O.E.M. Interchanges	12608	○|○	83125				
	Models with Air Suspension	120-1		...	...	○|○	83125	...
		1201		...	...	○|○	83125	...
GEORGIE BOY MANUFACTURING								
CLASS A MOTORHOMES								
99-09	All Series MotorHomes with Ford F53 Chassis with 16,000 lb GVW to 22,000 lb GVW	1C34-18045-AA	○|○	83209	89414		...	...
		1C34-18045-JA	○|○	83209	89414		...	...
		9U9Z18125A		...	...	○|○	83122	89406
		9U9Z-18124-A	○|○	83209	89414		...	...
		9U9Z-18125-A		...	...	○|○	83122	89406
		9U94-18045-AA	○|○	83209	89414		...	...
		9U94-18080-AA		...	...	○|○	83122	89406
		9U9418080AA		...	...	○|○	83122	89406
		ASH137		...	...	○|○	83122	89406
		ASH1023		...	...	○|○	83122	89406
		ASH1206		...	...	○|○	83122	89406
		ASH1230		...	...	○|○	83122	89406
		ASH25824		...	...	○|○	83122	89406
		ASH-137		...	...	○|○	83122	89406
		ASH-294	○|○	83209	89414		...	...

Year Ano Année	Model Modelo Modle	OEM #		Front			Rear	
				Fleetline	GasSLX		Fleetline	GasSLX
GEORGIE BOY MANUFACTURING (CONT'D)								
CLASS A MOTORHOMES (cont'd)								
99-09	All Series MotorHomes with Ford F53 Chassis with 16,000 lb GVW to 22,000 lb GVW	ASH-1022	○|○	83209	89414		...	...
		ASH-1023		...	...	○|○	83122	89406
		ASH-1205	○|○	83209	89414		...	...
		ASH-1206		...	...	○|○	83122	89406
		ASH-1228	○|○	83209	89414		...	...
		ASH-1229	○|○	83209	89414		...	...
		ASH-1230		...	...	○|○	83122	89406
		ASH-25822	○|○	83209	89414		...	...
		ASH-25823	○|○	83209	89414		...	...
		ASH-25824		...	...	○|○	83122	89406
		AT621		...	...	○|○	83122	89406
		AT-620	○|○	83209	89414		...	...
		AT-621		...	...	○|○	83122	89406
		AT-766	○|○	83209	89414		...	...
	Models with Workhorse UFO Chassis with Hendrickson Softek Front Suspension	66153-002	○|○	83124	89407		...	...
		66153002	○|○	83124	89407		...	...
		F4BE5C832MO	○|○	83124	89407		...	...
		F4-BE5-C832-MO	○|○	83124	89407		...	...
CLASS C MOTORHOMES								
99-09	Maverick Series MotorHomes with Ford E450 Chassis	ASH-1136		...	...	–|○	G63623	...
		ASH-1154	–|○	G63622	...		...	...
GILLIG BROS.								
	Additional O.E.M. Interchanges	53-02132		85723				
		53-02133-000		...	...	–|–	85318	...
		53-13952-000	–|–	85722				
		53-14005-000		85723				
		82-21542-000	○|○	85716				
		82-30159-000	–|–	85708				
		90-1908		85723				
		70034	○|○	85302 or 89420				
		665568		...	...	○|○	85051	...
		680009	○|○	85302 or 89420				
		680333	–|–	85708				
		901908		85723				
		5302132		85723				
		5302133000		...	...	–|–	85318	...
		5313952000	–|–	85722				
		5314005000		85723				
		8221542000	○|○	85716				
		8230159000	–|–	85708				
	Models with Neway ARD-234 Models Truck & Tractor Air Suspension (ARD-234-6)	90044046		...	...	○|○	83123	89405
	Models with O.E.M. Number	82-01878	○|○	83122	89406		...	...
		90-1951-SP1		...	...	○|○	85734	...
		90-1968	○|○	85712	...		...	...
		90-2423		85723	...		...	...
		695109		85723	...		...	...
		901951SP1		...	...	○|○	85734	...
		901968	○|○	85712	...		...	...
		902423		85723	...		...	...
		1583470		...	...	○|○	85051	...

APPLICATION GUIDE - TRUCKS, TRAILERS AND BUSES

Year Ano Année	Model Modelo Modle	OEM #		Front			Rear	
				Fleetline	GasSLX		Fleetline	GasSLX
GILLIG BROS. (CONT'D)								
	Models with O.E.M. Number	8201878	O|O	83122	89406		...	...
		90044683		...	...	O|O	83122	89406
		90044769		...	...	O|O	83207	89407
		90044770		...	...	O|O	83207	89407
		H53-02132-14005		85723	...		...	...
		H53-20415-006		...	...	O|O	85051	...
		H5320415006		...	...	O|O	85051	...
		H530213214005		85723	...		...	...
		MR6394		85723	...		...	...
	Phantom Models (30 Foot) with O.E.M. Number	90-2164 SP1		85723	...		...	...
		902164 SP1		85723	...		...	...
	Phantom Models with O.E.M. Number	1145291N000		...	...	O|O	85916	89430
		9051024		...	...	O|O	85916	89430
	School Bus w/1" Mounting Pins	53-176	O|O	85304	...		...	...
		200-171	O|O	85304	...		...	...
		53176	O|O	85304	...		...	...
		200171	O|O	85304	...		...	...
	School Bus w/3/4" Mounting Pins	57113	O|O	83219	...		...	...
		57131		...	...	O|O	83216	...
	Transit Bus, Phantom 55, 40, TB40	53-14010		...	...	-|-	85318	...
		53-24685		85723	...		...	...
		90F1912		...	...	-|-	85318	...
		90F-1912		...	...	-|-	85318	...
		695110		...	...	-|-	85318	...
		5314010		...	...	-|-	85318	...
		5324685		85723	...		...	...
GLAVAL BUS CO.								
CONCORDE II - SERIES								
04-11	Models with F-650 chassis with 22,000 lb Multi-leaf Rear Springs	4C4Z-18125-B		...	...	-|O	83317	...
		501906C92		...	...	-|O	83317	...
		ASH24661		...	...	-|O	83317	...
00-15	Models with F-650 chassis with 10,000 lb Front Suspension	4C4Z18124QA	O|O	83175	...		...	...
		4C4Z-18124-QA	O|O	83175	...		...	...
		3584116C1	O|O	83175	...		...	...
		3584116C2	O|O	83175	...		...	...
		AA616	O|O	83175	...		...	...
		AA-616	O|O	83175	...		...	...
00-15	Models with F-650 chassis with 12,000 & 13,200 lb Front Springs	4C4Z18124JB	O|O	85928	...		...	...
		4C4Z18124RA	O|O	85928	...		...	...
		4C4Z-18124-JB	O|O	85928	...		...	...
		4C4Z-18124-RA	O|O	85928	...		...	...
		3584118C2	O|O	85928	...		...	...
		AA617	O|O	85928	...		...	...
		AA-617	O|O	85928	...		...	...
		AT812	O|O	85928	...		...	...
		AT-812	O|O	85928	...		...	...
15-23	Models with F-650 chassis with 13,500, 15,500 & 19,000 lb Multi-leaf Rear Springs From 07/15	471700011531		...	...	O|O	85180	...
		ASH24660		...	...	O|O	85180	...
		ASH-24660		...	...	O|O	85180	...
		FC4Z18125A		...	...	O|O	85180	...
		FC4Z-18125-A		...	...	O|O	85180	...
		FC44-18080-AB		...	...	O|O	85180	...
		FC4418080AB		...	...	O|O	85180	...

APPLICATION GUIDE - TRUCKS, TRAILERS AND BUSES

Year Ano Année	Model Modelo Modle	OEM #		Front			Rear	
				Fleetline	GasSLX		Fleetline	GasSLX
GLAVAL BUS CO. (CONT'D)								
CONCORDE II - SERIES (cont'd)								
15-23	Models with F-650 chassis with 19.5" or 22.5" Wheels (22,000 lb GVW) From 07/15	471700011530	○|○	**85181**	...		...	...
		ASH24658	○|○	**85181**	...		...	...
		ASH24659	○|○	**85181**	...		...	...
		ASH-24658	○|○	**85181**	...		...	...
		ASH-24659	○|○	**85181**	...		...	...
		FC4Z18124A	○|○	**85181**	...		...	...
		FC4Z18124B	○|○	**85181**	...		...	...
		FC4Z-18124-A	○|○	**85181**	...		...	...
		FC4Z-18124-B	○|○	**85181**	...		...	...
		FC44-18045-BB	○|○	**85181**	...		...	...
		FC4418045BB	○|○	**85181**	...		...	...
2015	Models with F-650 chassis with 21,000 lb Rear Air Suspension To 2015	4C4Z18125DA		...	...	○|○	**85926**	...
		4C4Z-18125-DA		...	...	○|○	**85926**	...
		3578858C1		...	...	○|○	**85926**	...
		3578858C2		...	...	○|○	**85926**	...
E350 & E450 FORD CHASSIS MODELS								
	Primetime Series Shuttle buses with Ford E350 Chassis To 2020	ASH-1136		...	...	−|○	**G63623**	...
	Primetime Series Shuttle buses with Ford E350 Chassis To 2022	ASH-1154	−|○	**G63622**	...		...	...
	Sport Series Shuttle buses with Ford E350 Chassis To 2020	ASH-1136		...	...	−|○	**G63623**	...
	Sport Series Shuttle buses with Ford E350 Chassis To 2022	ASH-1154	−|○	**G63622**	...		...	...
	Universal Series Shuttle buses with Ford E350 & E450 Chassis To 2020	ASH-1136		...	...	−|○	**G63623**	...
	Universal Series Shuttle buses with Ford E350 & E450 Chassis To 2022	ASH-1154	−|○	**G63622**	...		...	...
GMC								
C4500 TOPKICK								
03-09	Models with Link Cabmate Model GMT560	1201-1043	○|○	**83025**				
		1202-1043	○|○	**83025**				
		12011043	○|○	**83025**				
		12021043	○|○	**83025**				
03-09	Truck Cabs with Link Cabmate Model GMC104TK	1201-0054	○|○	**83021**				
		1202-0054	○|○	**83021**				
		12010054	○|○	**83021**				
		12020054	○|○	**83021**				
90-09	C Chassis - Conventional Cab with 15000, 19000, 21000 lb Multileaf Springs	15174902		...	...	−|−	**85071**	...
		22064232		...	...	−|−	**85071**	...
		88982686		...	...	−|−	**85071**	...
90-09	C Chassis - Conventional Cab with 19000, 21000, 23000 lb Taperleaf Springs (EXC Low Profile Vehicle)	22064233		...	...	−|−	**83136**	...
90-09	C Chassis - Conventional Cab with Front Shock with O.E.M. Number	15123676	−|−	**83136**	...		...	...
		15588554	−|−	**83136**	...		...	...
		15887728	−|−	**83136**	...		...	...
		19152843	−|−	**83136**	...		...	...
		22064230	−|−	**83136**	...		...	...
		88982682	−|−	**83136**	...		...	...
C5500 TOPKICK								
03-09	Models with Link Cabmate Model GMT560	1201-1043	○|○	**83025**				
		1202-1043	○|○	**83025**				
		12011043	○|○	**83025**				
		12021043	○|○	**83025**				
03-09	Truck Cabs with Link Cabmate Model GMC104TK	1201-0054	○|○	**83021**				
		1202-0054	○|○	**83021**				

Year Ano Année	Model Modelo Modle	OEM #		Front			Rear	
				Fleetline	GasSLX		Fleetline	GasSLX
GMC (CONT'D)								
C5500 TOPKICK (cont'd)								
03-09	Truck Cabs with Link Cabmate Model GMC104TK	12010054	○|○	**83021**				
		12020054	○|○	**83021**				
90-09	C Chassis - Conventional Cab with 15000, 19000, 21000 lb Multileaf Springs	15174902		...	...	–|–	**85071**	...
		22064232		...	...	–|–	**85071**	...
		88982686		...	...	–|–	**85071**	...
90-09	C Chassis - Conventional Cab with 19000, 21000, 23000 lb Taperleaf Springs (EXC Low Profile Vehicle)	22064233		...	...	–|–	**83136**	...
90-09	C Chassis - Conventional Cab with Front Shock with O.E.M. Number	15123676	–|–	**83136**	...		...	...
		15588554	–|–	**83136**	...		...	...
		15887728	–|–	**83136**	...		...	...
		19152843	–|–	**83136**	...		...	...
		22064230	–|–	**83136**	...		...	...
		88982682	–|–	**83136**	...		...	...
C6000 TOPKICK								
90-96	Truck Cabs with Link Cabmate Model GMC104TK	1201-0054	○|○	**83021**				
		1202-0054	○|○	**83021**				
		12010054	○|○	**83021**				
		12020054	○|○	**83021**				
C6500 TOPKICK								
97-01	Truck Cabs with Link Cabmate Model GMC104TK	1201-0054	○|○	**83021**				
		1202-0054	○|○	**83021**				
		12010054	○|○	**83021**				
		12020054	○|○	**83021**				
03-09	Truck Cabs with Link Cabmate Model GMC104TK	1201-0054	○|○	**83021**				
		1202-0054	○|○	**83021**				
		12010054	○|○	**83021**				
		12020054	○|○	**83021**				
C7000 TOPKICK								
90-96	Truck Cabs with Link Cabmate Model GMC104TK	1201-0054	○|○	**83021**				
		1202-0054	○|○	**83021**				
		12010054	○|○	**83021**				
		12020054	○|○	**83021**				
C7500 TOPKICK								
97-09	Truck Cabs with Link Cabmate Model GMC104TK	1201-0054	○|○	**83021**				
		1202-0054	○|○	**83021**				
		12010054	○|○	**83021**				
		12020054	○|○	**83021**				
C8500 TOPKICK								
03-09	Truck Cabs with Link Cabmate Model GMC104TK	1201-0054	○|○	**83021**				
		1202-0054	○|○	**83021**				
		12010054	○|○	**83021**				
		12020054	○|○	**83021**				
COACHES								
	4100, 4900 Models	3182842	–|○	**85711**	...		...	...
		3188599	–|○	**85711**	...		...	...
		3192416	–|○	**85711**	...		...	...
		4975552	–|○	**85711**	...		...	...
	4500, 5300 Models	3166657	○|○	**85700**	...		...	...
		3192333	○|○	**85700**	...		...	...

Year Ano Année	Model Modelo Modle	OEM #		Front			Rear	
				Fleetline	GasSLX		Fleetline	GasSLX
GMC (CONT'D)								
COACHES (cont'd)								
	Models with O.E.M. Number	3178106	O|O	**85700**	...		...	...
		3178507	O|O	**85700**	...		...	...
		3178995	O|O	**85700**	...		...	...
		3189265	O|O	**85700**	...		...	...
		5304059	O|O	**85700**	...		...	...
		5316784	O|O	**85700**	...		...	...
		5316794	O|O	**85700**	...		...	...
		5352857	O|O	**85700**	...		...	...
		5527271	O|O	**85700**	...		...	...
		5527272	O|O	**85700**	...		...	...
		5549924	O|O	**85700**	...		...	...
C - SERIES (C6500, C7500, C8500) TOPKICK								
95-02	Models with Hendrickson Air Suspension (Stamping number 47902-13)	12474915		...	...	O|O	**83122**	**89406**
		15963161		...	...	O|O	**83122**	**89406**
96-02	Models with Hendrickson Air Suspension (Stamping number 47902-29)	12474917		...	...	O|O	**83137**	...
		15740554		...	...	O|O	**83137**	...
90-09	Conventional Cab	15123676	–|–	**83136**	...		...	...
		15174898	–|–	**83136**	...		...	...
		15174902		...	...	–|–	**85071**	...
		15588554	–|–	**83136**	...		...	...
		15887728	–|–	**83136**	...		...	...
		19152843	–|–	**83136**	...		...	...
		22064230	–|–	**83136**	...		...	...
		22064232		...	...	–|–	**85071**	...
		88982682	–|–	**83136**	...		...	...
		88982686		...	...	–|–	**85071**	...
90-09	Conventional Cab w/19000, 21000, 23000 lb Taperleaf Springs (EXC Low Profile Vehicle)	22064233		...	...	–|–	**83136**	...
90-99	Conventional Cab with 9100 to 17500 lb Rear Axle	22064432		...	...	O|O	**83221**	...
	Models with O.E.M. Number	88982684	–|–	**83136**	...		...	...
79-09	Conventional Trucks measuring 108" BBC or 116" BBC with Link Cabmate Model GMC816	1202-0012	O|O	**83023**				
		12020012	O|O	**83023**				
	...	1591501		...	...	–|–	**85722**	...
	Additional O.E.M. Interchanges	97-2210-00156	O|O	**85702**				
		97-2210-00164	–|–	**85708**				
		97-2210-00170		**85733**	...		...	...
		507-16	O|O	**85702**				
		507-19	O|O	**85700**				
		35901-0003	O|O	**85301**				
		35901-0004		...	...	O|O	**83219**	...
		35901-0017	O|O	**83314**	...		...	...
		50716	O|O	**85702**				
		50719	O|O	**85700**				
		684280	O|O	**83209 or 89414**				
		3171696	O|O	**85307**				
		3172948	O|O	**85303 or 89422**				
		3178157	O|O	**85700**				
		3178233	O|O	**85734**				
		3188626	O|O	**85300 or 89419**				
		3188729	O|O	**85303 or 89422**				
		4939852	O|O	**85308 or 89422**				
		4939967		...	...	O|O	**85308**	**89422**
		4940601	O|O	**83216**				

APPLICATION GUIDE - TRUCKS, TRAILERS AND BUSES

GMC (CONT'D)

Year Ano Année	Model Modelo Modle	OEM #	Front Fleetline	Front GasSLX	Rear Fleetline	Rear GasSLX
	Additional O.E.M. Interchanges	4940627	83203 or 89436			
		4940640	83216			
		4940650	83207 or 89407			
		4940654	83216			
		4940660	83207 or 89407			
		4963844	85307			
		4974401	85700			
		4975429	85300 or 89419			
		4975479	83400	...	...	...
		4975480	83400	...	...	...
		4975501	85700			
		4975516	85702			
		4975518	...	...	85704	...
		4975538	85700			
		4975549	83216	...	...	...
		4975550	85702			
		5171068	83216			
		5316791	83219			
		5316792	85305			
		5316793	85305			
		5321920	85307			
		5321929	85307			
		5348631	83203 or 89436			
		5352858	85305			
		5353054	85303	89422	...	...
		5355798	85307			
		5357955	85300 or 89419			
		5357956	85734			
		5357959	85300 or 89419			
		5361994	85734			
		5374779	85308 or 89422			
		5374999	85307			
		5385939	85307			
		5392387	85303	89422	...	...
		5394448	85305			
		5394467	85305			
		5455798	85307			
		5513489	83216			
		5513716	85304			
		5516459	85305			
		5522794	85308 or 89422			
		5522818	85305			
		5527001	85300 or 89419			
		5527606	85305			
		5531027	85301			
		5531435	85307			
		5531436	85307			
		5531437	85307			
		5532026	85304	...	...	...
		5532425	83207 or 89407			
		5532433	83207 or 89407			
		5532675	...	...	85307	...
		5533699	85302 or 89420			
		5534430	85303 or 89422			
		5534439	85304			

APPLICATION GUIDE - TRUCKS, TRAILERS AND BUSES

GMC (CONT'D)

Year Ano Année	Model Modelo Modle	OEM #		Front			Rear	
				Fleetline	GasSLX		Fleetline	GasSLX
	Additional O.E.M. Interchanges	5534447	O|O	85303 or 89422				
		5544112	O|O	83216				
		5544581	O|O	85302 or 89420				
		5544716	O|O	85304				
		5544717	O|O	85304				
		5544812	O|O	83308				
		5549899	O|O	83207 or 89407				
		5549925	O|O	85304	...		...	...
		5552111	O|O	85304				
		5552112	O|O	85307				
		5552114	O|O	83216				
		5552206	O|O	83214				
		5552209	O|O	83215				
		5552210	O|O	85308 or 89422				
		5552244	O|O	85308 or 89422				
		5552285	O|O	83214				
		5552453	O|O	85301				
		5554184	O|O	85302 or 89420				
		5554589	O|O	85307				
		5554596		...	...	O|O	85303	89422
		5554814	O|O	85302 or 89420				
		5554959	O|O	83401	...		...	...
		5554995	O|O	85305				
		5559363	O|O	83203 or 89436				
		5585939	O|O	85307				
		22007703	O|O	83303	...		...	...
		22012067	O|O	85700	...		...	...
		22012082	O|O	85702				
		22012083	–|O	85711				
		22012083GS	–|O	85711				
		22012114	O|O	85700	...		...	...
		22012131	–|O	85711				
		22045526		...	...	O|O	85702	...
		22046481	O|O	85702				
		22052014		...	...	O|O	85702	...
		359010003	O|O	85301				
		359010004		...	...	O|O	83219	...
		359010017	O|O	83314	...		...	...
		97221000156	O|O	85702				
		97221000164	–|–	85708				
		97221000170		85733	...		...	...
	Astro Cabover (Sleeper & Non-Sleeper Trucks) with Link Cabmate Model GMC-2P-A	1202-0032	O|O	83016				
		12020032	O|O	83016				
	Brigadier Tractors with J9 Cabs with Link Cabmate Model GMC92J9	1202-0012	O|O	83023				
		12020012	O|O	83023				
	Models with O.E.M. Number	87-2520-00003		...	...	O|O	85704	...
		22024061		...	...	O|O	85704	...
		22025067		...	...	O|O	85704	...
		22025305		...	...	O|O	85704	...
		22046489	O|O	85303	89422		...	...
		22065218	O|O	G63347	...		...	...
		22065251	O|O	85030	89440		...	...
		87252000003		...	...	O|O	85704	...
		U0109-014		...	...	–|–	83400	...
		U0109014		...	...	–|–	83400	...

APPLICATION GUIDE - TRUCKS, TRAILERS AND BUSES

Year Ano Année	Model Modelo Modle	OEM #		Front			Rear	
				Fleetline	GasSLX		Fleetline	GasSLX
GMC (CONT'D)								
	TopKick Truck Cabs with Link Cabmate Model GMC92TK	1202-0012	○|○	**83023**				
		12020012	○|○	**83023**				
P - SERIES								
92-96	Motorhome Chassis	22064233		...	...	–|–	**83136**	...
T5500								
90-06	Tilt Cab with 15000, 19000, 21000 lb Multileaf Springs	15174902		...	...	–|–	**85071**	...
		22064232		...	...	–|–	**85071**	...
97-09	FL1 Tilt Cab with 8100 lb Axle	22064804	–|–	**83136**	...		...	...
		22064805	–|–	**83136**	...		...	...
		22165187	–|–	**83136**	...		...	...
		22165188	–|–	**83136**	...		...	...
97-09	FL2 Tilt Cab with 5000 to 11000 lb Axle	22064807	–|–	**83136**	...		...	...
		22166442	–|–	**83136**	...		...	...
97-09	FL3 Tilt Cab with 14575 lb Axle	22064806	–|–	**83136**	...		...	...
		22165189	–|–	**83136**	...		...	...
92-99	Tilt Cab with 19000, 21000, 23000 lb Taperleaf Springs (EXC Low Profile Veh.)	22064233		...	...	–|–	**83136**	...
1999	Models with Hendrickson Air Suspension (Stamping number 47902-13)	12474915		...	...	○|○	**83122**	**89406**
		15963161		...	...	○|○	**83122**	**89406**
T6500								
90-06	Tilt Cab with 15000, 19000, 21000 lb Multileaf Springs	15174902		...	...	–|–	**85071**	...
		22064232		...	...	–|–	**85071**	...
97-09	FL1 Tilt Cab with 8100 lb Axle	22064804	–|–	**83136**	...		...	...
		22064805	–|–	**83136**	...		...	...
		22165187	–|–	**83136**	...		...	...
		22165188	–|–	**83136**	...		...	...
97-09	FL2 Tilt Cab with 5000 to 11000 lb Axle	22064807	–|–	**83136**	...		...	...
		22166442	–|–	**83136**	...		...	...
97-09	FL3 Tilt Cab with 14575 lb Axle	22064806	–|–	**83136**	...		...	...
		22165189	–|–	**83136**	...		...	...
92-99	Tilt Cab with 19000, 21000, 23000 lb Taperleaf Springs (EXC Low Profile Veh.)	22064233		...	...	–|–	**83136**	...
1999	Models with Hendrickson Air Suspension (Stamping number 47902-13)	12474915		...	...	○|○	**83122**	**89406**
		15963161		...	...	○|○	**83122**	**89406**
T7500								
90-06	Tilt Cab with 15000, 19000, 21000 lb Multileaf Springs	15174902		...	...	–|–	**85071**	...
		22064232		...	...	–|–	**85071**	...
97-09	FL1 Tilt Cab with 8100 lb Axle	22064804	–|–	**83136**	...		...	...
		22064805	–|–	**83136**	...		...	...
		22165187	–|–	**83136**	...		...	...
		22165188	–|–	**83136**	...		...	...
97-09	FL2 Tilt Cab with 5000 to 11000 lb Axle	22064807	–|–	**83136**	...		...	...
		22166442	–|–	**83136**	...		...	...
97-09	FL3 Tilt Cab with 14575 lb Axle	22064806	–|–	**83136**	...		...	...
		22165189	–|–	**83136**	...		...	...
92-99	Tilt Cab with 19000, 21000, 23000 lb Taperleaf Springs (EXC Low Profile Veh.)	22064233		...	...	–|–	**83136**	...
1999	Models with Hendrickson Air Suspension (Stamping number 47902-13)	12474915		...	...	○|○	**83122**	**89406**
		15963161		...	...	○|○	**83122**	**89406**
T8500								
90-06	Tilt Cab with 15000, 19000, 21000 lb Multileaf Springs	15174902		...	...	–|–	**85071**	...

Year Ano Année	Model Modelo Modle	OEM #		Front			Rear	
				Fleetline	GasSLX		Fleetline	GasSLX
GMC (CONT'D)								
T8500 (cont'd)								
90-06	Tilt Cab with 15000, 19000, 21000 lb Multileaf Springs	22064232		...	...	−|−	85071	...
97-09	FL1 Tilt Cab with 8100 lb Axle	22064804	−|−	83136	...		...	...
		22064805	−|−	83136	...		...	...
		22165187	−|−	83136	...		...	...
		22165188	−|−	83136	...		...	...
97-09	FL2 Tilt Cab with 5000 to 11000 lb Axle	22064807	−|−	83136	...		...	...
		22166442	−|−	83136	...		...	...
97-09	FL3 Tilt Cab with 14575 lb Axle	22064806	−|−	83136	...		...	...
		22165189	−|−	83136	...		...	...
92-99	Tilt Cab with 19000, 21000, 23000 lb Taperleaf Springs (EXC Low Profile Veh.)	22064233		...	...	−|−	83136	...
1999	Models with Hendrickson Air Suspension (Stamping number 47902-13)	12474915		...	...	o|o	83122	89406
		15963161		...	...	o|o	83122	89406
W4								
01-08	with O.E.M. Number	97253651		...	...	o|o	83159	...
02-14	with O.E.M. Number	8-97253665-0		...	...	o|o	83159	...
		898098-0580		...	...	o|o	83159	...
		898098-0581		...	...	o|o	83159	...
		898098-0590		...	...	o|o	83159	...
		97253665		...	...	o|o	83159	...
		98098058		...	...	o|o	83159	...
		98098059		...	...	o|o	83159	...
		8972536650		...	...	o|o	83159	...
		8980980580		...	...	o|o	83159	...
		8980980581		...	...	o|o	83159	...
		8980980590		...	...	o|o	83159	...
W5								
03-09	with O.E.M. Number	97253665		...	...	o|o	83159	...
88-99	...	1-51630-217-0	−|o	83114	...		...	...
		1-51630-217-1	−|o	83114	...		...	...
		1-51630-219-1	−|o	83114	...		...	...
		1516302170	−|o	83114	...		...	...
		1516302171	−|o	83114	...		...	...
		1516302191	−|o	83114	...		...	...
W6								
86-91	...	1-51630-217-1	−|o	83114	...		...	...
		1516302170	−|o	83114	...		...	...
		1516302171	−|o	83114	...		...	...
W4500 FORWARD								
92-10	Models with 11000 lb & 13000 lb Suspension	8-94454-986-0	−|o	83515	...		...	...
		8-94454-987-0	−|o	83515	...		...	...
		8-97253-620-0	−|o	83515	...		...	...
		9-51630-647-1	−|o	83515	...		...	...
		94454987	−|o	83515	...		...	...
		97083027	−|o	83515	...		...	...
		97083029	−|o	83515	...		...	...
		97253620	−|o	83515	...		...	...
		98232671	−|o	83515	...		...	...
		8944549860	−|o	83515	...		...	...
		8944549870	−|o	83515	...		...	...
		8972536200	−|o	83515	...		...	...

APPLICATION GUIDE - TRUCKS, TRAILERS AND BUSES

Year Ano Année	Model Modelo Modle	OEM #		Front			Rear	
				Fleetline	GasSLX		Fleetline	GasSLX
GMC (CONT'D)								
W4500 FORWARD (cont'd)								
92-10	Models with 11000 lb & 13000 lb Suspension	9516306471	–|O	83515	...		...	...
W5500 FORWARD								
88-10	Models with 11000 lb & 13000 lb Suspension	97253620	–|O	83515	...		...	...
W6500 FORWARD								
87-96	Models with 11000 lb & 13000 lb Suspension	1-51630-168-1	–|O	83515	...		...	...
		1516301681	–|O	83515	...		...	...
W - SERIES (ISUZU)								
	Models with O.E.M. Number	8-94057-593-0	–|O	83114	...		...	...
		8-97083-029-0	–|O	83515	...		...	...
		8-97201-960-0	–|O	83515	...		...	...
		8-97253664-0		...	...	O|O	83159	...
		898098-1250	–|O	83515	...		...	...
		898098-1270	–|O	83515	...		...	...
		94033786		...	...	–|O	83114	...
		94051090	–|O	83114	...		...	...
		94057593	–|O	83114	...		...	...
		94454987	–|O	83515	...		...	...
		97201960	–|O	83515	...		...	...
		97253616	–|O	83515	...		...	...
		97253621	–|O	83515	...		...	...
		97253623	–|O	83515	...		...	...
		97253664		...	...	O|O	83159	...
		98098125	–|O	83515	...		...	...
		98098127	–|O	83515	...		...	...
		8940575930	–|O	83114	...		...	...
		8970830290	–|O	83515	...		...	...
		8972019600	–|O	83515	...		...	...
		8972536640		...	...	O|O	83159	...
		8980981250	–|O	83515	...		...	...
		8980981270	–|O	83515	...		...	...
GMC TRUCK								
3500 & 4000 SERIES								
60-62	3500, 4000, B-4000, L-4000, S-4000 with H-130, H-150 and 13800 Axles	.....		...	...	O|O	83221	...
63-66	Truck and School Bus	.....		...	...	O|O	83221	...
		.....	O|O	85005	89430		...	...
4500 SERIES								
66-72	CE-4500, CS-4500 Conventional Cab with V-8 Gas or In-line 6 Gas Engines	3192892	O|O	83221	...		...	...
		22012096	O|O	83221	...		...	...
66-72	EG-4500, EM-4500, ES-4500 Cab/Cowl with V-6 Gas or Diesel or In-line 6 Gas Engines	3171068	O|O	83216	...		...	...
		3171462		...	...	O|O	83126	89430
		3192657	O|O	83216	...		...	...
		3192890		...	...	O|O	83126	89430
		4940614	O|O	83216	...		...	...
		4963853	O|O	83216	...		...	...
		4963854	O|O	83216	...		...	...
		22012095		...	...	O|O	83126	89430
72-80	PS4620 P, 4650P Step Van (Walk-in)	3192892		...	...	O|O	83221	...
		22012096		...	...	O|O	83221	...

Year Ano Année	Model Modelo Modle	OEM #		Front			Rear	
				Fleetline	GasSLX		Fleetline	GasSLX
GMC TRUCK (CONT'D)								
4500 SERIES (cont'd)								
72-80	PS4620 P, 4650P Step Van (Walk-in) 3/4" Upper bolt	3192890	O|O	**83126**	**89430**		...	...
		4940606	O|O	**83126**	**89430**		...	...
		4975497	O|O	**83126**	**89430**		...	...
		22002293	O|O	**83126**	**89430**		...	...
		22007701	O|O	**83126**	**89430**		...	...
		22012095	O|O	**83126**	**89430**		...	...
		22012166	O|O	**83126**	**89430**		...	...
72-80	PS4620 P, 4650P Step Van (Walk-in) 5/8" Upper bolt	22007751	O|O	**83303**	...		...	...
5000 SERIES								
60-62	5000, B-5000, L-5000, S-5000 with 1618 or 16802 Axle	.....		...	...	O|O	**83221**	...
63-68	W-5000, BW-5000, DW-5000	.....	O|O	**85005**	**89430**		...	...
73-80	C, S Chassis - Conventional Cab	4975467	O|O	**83207**	**89407**		...	...
		4975494	O|O	**83207**	**89407**		...	...
		22007750	O|O	**83207**	**89407**		...	...
75-80	C Chassis - Conventional Cab	4975510	O|O	**83221**	...		...	...
76-89	C Chassis - Conventional Cab	22012096		...	...	O|O	**83221**	...
		22012196		...	...	O|O	**83221**	...
5500 SERIES								
60-68	LW-5500	.....	O|O	**85307**	...		...	...
63-68	W-5500	.....	O|O	**85005**	**89430**		...	...
66-72	CE-5500, CS-5500 Conventional Cab with V-8 Gas or In-line 6 Gas Engines	3192891	O|O	**83221**	...		...	...
		3192892	O|O	**83221**	...		...	...
		22012096	O|O	**83221**	...		...	...
66-72	CG-5500, CM-5500, T-5500 Conventional & Tilt Cab with V-6 Gas or Diesel Engines	3192890	O|O	**83126**	**89430**		...	...
		4940606	O|O	**83126**	**89430**		...	...
		22012095	O|O	**83126**	**89430**		...	...
66-72	EG-5500, EM-5500, ES-5500 Cab/Cowl with 6 Cyl. Engines	3171068	O|O	**83216**	...		...	...
		3171462		...	...	O|O	**83126**	**89430**
		3192657	O|O	**83216**	...		...	...
		3192890		...	...	O|O	**83126**	**89430**
		4940614	O|O	**83216**	...		...	...
		4963853	O|O	**83216**	...		...	...
		4963854	O|O	**83216**	...		...	...
		22012095		...	...	O|O	**83126**	**89430**
73-89	C, S Chassis - Conventional Cab and School Bus	22012095	O|O	**83126**	**89430**		...	...
		22012166	O|O	**83126**	**89430**		...	...
6000 SERIES								
60-68	L - 6000	.....	O|O	**85307**	...		...	...
63-68	DW - 6000	.....	O|O	**85005**	**89430**		...	...
73-75	C, S Chassis - Conventional Cab and School Bus - Exc. with 18500, 20800 & 23000 lb. Rear Axle	4975467	O|O	**83207**	**89407**		...	...
		4975494	O|O	**83207**	**89407**		...	...
		22007750	O|O	**83207**	**89407**		...	...
79-80	W Chassis - 72" BBC Steel Tilt Cab	22002293	O|O	**83126**	**89430**		...	...
		22007751	O|O	**83303**	...		...	...
6500 SERIES								
66-72	CE-6500, CM-6500 Conventional Cab with V-6 Diesel or V-8 Gas Engine	3192892		...	...	O|O	**83221**	...
66-72	CE-6500, ME-6500 Conventional Cab with V-8 Gas Engine - Exc. 11000 lb. Axle	3192891	O|O	**83221**	...		...	...
		3192892	O|O	**83221**	...		...	...

GMC TRUCK (CONT'D)

6500 SERIES (cont'd)

Year Ano Année	Model Modelo Modle	OEM #		Front Fleetline	Front GasSLX		Rear Fleetline	Rear GasSLX
66-72	CE-6500, ME-6500 Conventional Cab with V-8 Gas Engine - Exc. 11000 lb. Axle	22012096	O|O	83221	...		...	...
66-72	CE-6500, ME-6500 Conventional Cab with V-8 Gas Engine with 11000 lb. Axle	3192890	O|O	83126	89430		...	...
		4940606	O|O	83126	89430		...	...
		22012095	O|O	83126	89430		...	...
66-72	CM-6500, TE-6500, TM-6500 Conventional Cab with V-6 Diesel or V-8 Gas Engine	3192890	O|O	83126	89430		...	...
		4940606	O|O	83126	89430		...	...
		22012095	O|O	83126	89430		...	...
		22012096		...	...	O|O	83221	...
66-72	EG-6500, DM-6500, ES-6500 Cab/Cowl with V-6 Gas or Diesel or In-line 6 Gas Engines	3171068	O|O	83216	...		...	...
		3171462		...	...	O|O	83126	89430
		3192657	O|O	83216	...		...	...
		3192890		...	...	O|O	83126	89430
		4963853	O|O	83216	...		...	...
		22012095		...	...	O|O	83126	89430
73-75	C, M, S Chassis - Conventional Cab and School Bus	4975467	O|O	83207	89407		...	...
		4975494	O|O	83207	89407		...	...
		22007750	O|O	83207	89407		...	...
73-75	C, M Chassis - Conventional Cab with 9000 & 12000 lb. Axle	3192890	O|O	83126	89430		...	...
		4940606	O|O	83126	89430		...	...
		4940614	O|O	83216	...		...	...
		4963854	O|O	83216	...		...	...
		4975497	O|O	83126	89430		...	...
		22012095	O|O	83126	89430		...	...
75-76	C, M Chassis - Conventional Cab	4975510	O|O	83221	...		...	...
73-80	C, M, S Chassis - Conventional Cab and School Bus - Exc. with 20800 or 23000 lb. Rear Axle	3192892		...	...	O|O	83221	...
		22012096		...	...	O|O	83221	...
		22012169		...	...	O|O	83221	...
73-80	C, M, S Chassis - Conventional Cab and School Bus with 20800 or 23000 lb. Rear Axle	4940606		...	...	O|O	83126	89430
		22012095		...	...	O|O	83126	89430
		22012166		...	...	O|O	83126	89430
73-80	C, S, T Chassis - Conventional & Tilt Cab and School Bus	3192890	O|O	83126	89430		...	...
		4940606	O|O	83126	89430		...	...
		4975497	O|O	83126	89430		...	...
		22002293	O|O	83126	89430		...	...
		22012095	O|O	83126	89430		...	...
75-89	C, M Chassis - Conventional Cab with 9000 & 12000 lb. Axle	4975511	O|O	83303	...		...	...
		22002295	O|O	83303	...		...	...
		22007751	O|O	83303	...		...	...
		22017530	O|O	83303	...		...	...
		22017531	O|O	83303	...		...	...

7000 SERIES

79-80	W Chassis - 72" BBC Steel Tilt Cab	22002293	O|O	83126	89430		...	...
		22007751	O|O	83303	...		...	...
79-81	C, M Chassis - 97" BBC Conventional Cab - Exc. with 18500, 20800 & 23000 lb. Rear Axle	22012096		...	...	O|O	83221	...
		22012169		...	...	O|O	83221	...
79-89	C, M Chassis - 97" BBC Conventional Cab	22002295	O|O	83303	...		...	...
		22007753	O|O	83303	...		...	...
		22017530	O|O	83303	...		...	...
		22017531	O|O	83303	...		...	...

APPLICATION GUIDE - TRUCKS, TRAILERS AND BUSES

Year Ano Année	Model Modelo Modle	OEM #		Front			Rear	
				Fleetline	GasSLX		Fleetline	GasSLX

GMC TRUCK (CONT'D)

7000 SERIES (cont'd)

79-89	C, M Chassis - 97" BBC Conventional Cab with 18500, 20800 & 23000 lb. Rear Axle	22012095		...	...	O|O	83126	89430
		22012166		...	...	O|O	83126	89430

7500 SERIES

66-69	72" BBC Tilt Cab	3171462	O|O	83126	89430		...	...
		4940606	O|O	83126	89430		...	...
		22012095	O|O	83126	89430		...	...
66-72	72" BBC Tilt Cab with V-6 2 Cycle Diesel Engine with 17221 Axle	3192892		...	...	O|O	83221	...
		22012096		...	...	O|O	83221	...
66-72	72" BBC Tilt Cab with V-6 2 Cycle Diesel Engine with 19101 and 19201 Axle	4940600		...	...	O|O	83209	89414
66-72	92" BBC Conventional Cab with Tapered 2-Leaf Softride 7000 & 9000 lb. Rating and F070, F090, F120 Axle (7000, 9000 & 12000 lb.)	3171068	O|O	83216	...		...	...
		3192657	O|O	83216	...		...	...
		4940614	O|O	83216	...		...	...
		4963853	O|O	83216	...		...	...
		4963854	O|O	83216	...		...	...
66-72	92" BBC Conventional Cab with Tapered 2-Leaf Softride 11000 lb. Rating and F120 Axle (12000 lb.)	3171069	O|O	85304	...		...	...
		22046483	O|O	85304	...		...	...
		22052336	O|O	85304	...		...	...
70-72	72" BBC Tilt Cab with Air Brakes & Gas Engine	5552452	O|O	85303	89422		...	...
		22012091	O|O	85303	89422		...	...
70-72	72" BBC Tilt Cab with Air Brakes - Exc. Gas Engine	3171462	O|O	83126	89430		...	...
		4940606	O|O	83126	89430		...	...
		22012095	O|O	83126	89430		...	...
73-80	H, J, M Chassis - 92" & 114" BBC Conventional Cab with V-6, V-8 Gas or V-6 Diesel Engines	4940614	O|O	83216	...		...	...
		4963854	O|O	83216	...		...	...
73-80	H, J, M Chassis - 92" & 114" BBC Conventional Cab	3171069	O|O	85304	...		...	...
		22046483	O|O	85304	...		...	...
		22052336	O|O	85304	...		...	...
73-80	R Chassis - Rear Engine Bus	5552451	O|O	85308	89422		...	...
		5552452		...	...	O|O	85303	89422
		5552456		...	...	O|O	85307	...
		22012090	O|O	85308	89422		...	...
		22012091		...	...	O|O	85303	89422
73-80	T, W Chassis - 72" BBC Steel Tilt Cab with V-6 Diesel Engine	4940606	O|O	83126	89430		...	...
		4975497	O|O	83126	89430		...	...
		22007751	O|O	83303	...		...	...
		22012095	O|O	83126	89430		...	...
73-80	T, W Chassis - 72" BBC Steel Tilt Cab with V-6 Gas Engine	5552452	O|O	85303	89422		...	...
		22012091	O|O	85303	89422		...	...
77-80	H, J Chassis - 92" BBC Conventional Cab	4963854	O|O	83216	...		...	...
		4984526	O|O	83216	...		...	...

8500 SERIES

66-72	72" BBC Tilt Cab	5544060	O|O	85302	89420		...	...
66-72	92" BBC Conventional Cab with 7000 & 9000 lb. Axles	3171069	O|O	85304	...		...	...
		22046483	O|O	85304	...		...	...
		22052336	O|O	85304	...		...	...
73-80	R Chassis - Rear Engine Bus	5552451	O|O	85308	89422		...	...
		5552452		...	...	O|O	85303	89422
		5552456		...	...	O|O	85307	...
		22012090	O|O	85308	89422		...	...

APPLICATION GUIDE - TRUCKS, TRAILERS AND BUSES

Year Ano Année	Model Modelo Modle	OEM #		Front			Rear	
				Fleetline	GasSLX		Fleetline	GasSLX
GMC TRUCK (CONT'D)								
8500 SERIES (cont'd)								
73-80	R Chassis - Rear Engine Bus	22012091		...	...	O|O	85303	89422
73-80	T, W Chassis - 72" BBC Steel Tilt Cab with V-6 Gas Engine	5552452	O|O	85303	89422		...	...
		22012091	O|O	85303	89422		...	...
79-80	D, F Chassis - 54" BBC Aluminum Tilt Cab	3171069	O|O	85304	...		...	...
		22046483	O|O	85304	...		...	...
		22052336	O|O	85304	...		...	...
73-81	H, J Chassis - 92" BBC Conventional Cab with V-6, V-8 Gas Engine	4940614	O|O	83216	...		...	...
		4963854	O|O	83216	...		...	...
		4984526	O|O	83216	...		...	...
79-82	H, J Chassis - 92" BBC Conventional Cab 4 x 2 with Air Suspension	3171069		...	...	O|O	85304	...
		22012065		...	...	O|O	85304	...
		22046483		...	...	O|O	85304	...
		22052336		...	...	O|O	85304	...
73-86	H, J, M Chassis - 92" & 114" BBC Conventional Cab	3171069	O|O	85304	...		...	...
		22046483	O|O	85304	...		...	...
		22052336	O|O	85304	...		...	...
1967	92" BBC Conventional Cab	3171068	O|O	83216	...		...	...
		3192657	O|O	83216	...		...	...
		4940614	O|O	83216	...		...	...
		4963853	O|O	83216	...		...	...
		4963854	O|O	83216	...		...	...
9500 SERIES								
66-72	48" BBC Aluminum Tilt Cab	5552454	O|O	85302	89420		...	...
66-72	72" BBC Steel Tilt Cab	5552452	O|O	85303	89422		...	...
		22012091	O|O	85303	89422		...	...
67-72	92" & 114" BBC Conventional Cab	3171068	O|O	83216	...		...	...
		3192657	O|O	83216	...		...	...
		4940614	O|O	83216	...		...	...
		4963853	O|O	83216	...		...	...
		4963854	O|O	83216	...		...	...
73-80	T, W Chassis - 72" BBC Steel Tilt Cab	5552452	O|O	85303	89422		...	...
		22012091	O|O	85303	89422		...	...
73-89	D, F Chassis - 54" BBC Aluminum Tilt Cab with Rear GM Air Ride Suspension (4 Req'd)	3171069	O|O	85304	...		...	...
		22012065	O|O	85304	...		...	...
		22046483	O|O	85304	...		...	...
		22052336	O|O	85304	...		...	...
73-89	H, J Chassis - 92" BBC Conventional Cab with Rear GM Air-Ride Suspension (4 req'd)	3171069	O|O	85304	...		...	...
		22012065	O|O	85304	...		...	...
		22046483	O|O	85304	...		...	...
		22052336	O|O	85304	...		...	...
77-89	M, N Chassis - 114" BBC Conventional & 108" BBC Aluminum Conventional Cab with Rear GM Air-Ride Suspension (4 req'd)	3171069	O|O	85304	...		...	...
		22046483	O|O	85304	...		...	...
		22052336	O|O	85304	...		...	...
ADDITIONAL APPLICATIONS								
	1500 Models	35901-0005		...	...	O|O	83219	...
		359010005		...	...	O|O	83219	...
	Models with O.E.M. Number	35901-0001		...	...	O|O	83209	89414
		359010001		...	...	O|O	83209	89414
B - SERIES - SCHOOL BUS								
90-06	B7 Model School Bus Chassis w/15000, 19000, 21000 lb Multileaf Springs	15174902		...	...	–|–	85071	...

APPLICATION GUIDE - TRUCKS, TRAILERS AND BUSES

Year Ano Année	Model Modelo Modle	OEM #		Front			Rear	
				Fleetline	GasSLX		Fleetline	GasSLX
GMC TRUCK (CONT'D)								
B - SERIES - SCHOOL BUS (cont'd)								
90-06	B7 Model School Bus Chassis w/15000, 19000, 21000 lb Multileaf Springs	22064232		...	...		85071	...
90-09	B6 , B7 Models with O.E.M. Number	15123676		83136	...		...	...
		15588554		83136	...		...	...
		22064230		83136	...		...	...
		88982682		83136	...		...	...
C - SERIES (C4500, C5500) TOPKICK								
83-89	C Chassis - Conventional Cab with 9100 to 17500 lb. Rear Axle	22064432		...	...		83221	...
90-99	C Chassis - Conventional Cab with 9100 to 17500 lb Rear Axle	22064432		...	...		83221	...
C - SERIES (C6500, C7500, C8500) TOPKICK								
83-89	Conventional Cab with 9100 to 17500 lb. Rear Axle	22064432		...	...		83221	...
WCA & WIA SERIES								
	Models with O.E.M. Number	37301-0016		85026	...		...	...
		37301-0021		85026	...		...	...
		37301-3202		85026	...		...	...
		373010016		85026	...		...	...
		373010021		85026	...		...	...
		373013202		85026	...		...	...
WH SERIES								
	WHS, WHR, WHL or WHE Models with Front Dual Shocks	3082284		83400	...		...	...
GOSHEN COACH								
	Impule Series Shuttle buses with Ford E350 & E450 Chassis To 2020	ASH1136		...	...		G63623	...
		ASH1154		G63622	...		...	...
		ASH-1136		...	...		G63623	...
		ASH-1154		G63622	...		...	...
	Pacer II Series Shuttle buses with Ford E350 Chassis To 2020	ASH1136		...	...		G63623	...
		ASH1154		G63622	...		...	...
		ASH-1136		...	...		G63623	...
		ASH-1154		G63622	...		...	...
GRANNING SUSPENSION								
MODEL L120 SELF STEER AXLE								
	Models with O.E.M. Number	701071-01		646155				
	Models T950-1200, -1400, -1700	2697		...	...		85712	...
	Models with O.E.M. Number	1085		...	...		83214	...
		680162		...	...		85300	89419
		OE12425		...	...		83214	...
GREAT DANE TRAILER								
	Trailers with Great Dane part number	HENS20001		...	...		83389	89436
		HENS20002		...	...		85000	89436
		HENS20126		...	...		85323	89436
		HENS21292		...	...		85052	...
		HENS23566		...	...		85000	89436
		HENS23649		...	...		85064	...
		HENS24088		...	...		83389	89436
		HENS24088		...	...		85000	89436
		HENS-20001		...	...		83389	89436
		HENS-20002		...	...		85000	89436
		HENS-20126		...	...		85323	89436

APPLICATION GUIDE - TRUCKS, TRAILERS AND BUSES

Year Ano Année	Model Modelo Modle	OEM #		Front			Rear	
				Fleetline	GasSLX		Fleetline	GasSLX
GREAT DANE TRAILER (CONT'D)								
	Trailers with Great Dane part number	HENS-21292		...	...	o|o	85052	...
		HENS-23566		...	...	o|o	85000	89436
		HENS-23649		...	...	o|o	85064	...
		HENS-24088		...	...	o|o	83389	89436
		HENS-24088		...	...	o|o	85000	89436
		MER202447		...	...	o|o	85919	...
		REY18165-01		...	...	o|o	85006	...
		REY1816501		...	...	o|o	85006	...
	Trailers with Reyco 86 AR / RS 1015, 1035, 3015, 3035 Slider Air Suspension	18165-01		...	...	o|o	85006	...
		1816501		...	...	o|o	85006	...
	Trailers with Reyco Suspension 87	18163-01		...	...	o|o	83207	89407
		1816301		...	...	o|o	83207	89407
	Trailers with Reyco Suspension 88	18164-01		...	...	o|o	83122	89406
		1816401		...	...	o|o	83122	89406
GRECH MOTORS								
	Shuttle buses with Ford E450 Chassis To 2020	ASH-1136		...	...	–|o	G63623	...
		ASH-1154	–|o	G63622	...		...	...
GREYHOUND BUS								
	Additional O.E.M. Interchanges	690029	o|o	85700				
		3166657	o|o	85700				
		3192333	o|o	85700				
	City Cruiser	12TA01013	o|o	85303	89422		...	...
		12TA-01-013	o|o	85303	89422		...	...
	MC5, MC7, MC8	3178157	o|o	85700	...		...	...
GRUMMAN BUS								
	Additional O.E.M. Interchanges	690029	o|o	85700				
	Model 870 Flex Bus	97-2210-00001		...	...	o|o	85704	...
		97-2210-00002		...	...	o|o	85704	...
		97-2210-00003		...	...	o|o	85704	...
		97-2210-00004		...	...	o|o	85704	...
		97-2210-00005		...	...	o|o	85704	...
		22025067		...	...	o|o	85704	...
		22025305		...	...	o|o	85704	...
		97221000001		...	...	o|o	85704	...
		97221000002		...	...	o|o	85704	...
		97221000003		...	...	o|o	85704	...
		97221000004		...	...	o|o	85704	...
		97221000005		...	...	o|o	85704	...
GULF STREAM COACH								
CLASS A MOTORHOMES								
02-04	Yellowstone Series MotorHomes with Freightliner XC Chassis	16-16736-000		...	...	o|o	85029	...
		16-16737-000	o|o	83160	...		...	...
		16-16873-000		...	...	o|o	85029	...
		16-16874-000	o|o	83160	...		...	...
		16-18103-000	–|–	85900	...		...	...
		1616736000		...	...	o|o	85029	...
		1616737000	o|o	83160	...		...	...
		1616873000		...	...	o|o	85029	...
		1616874000	o|o	83160	...		...	...
		1618103000	–|–	85900	...		...	...
		141700131809		...	...	o|o	85029	...
		141700131810	o|o	83160	...		...	...

Year Ano Année	Model Modelo Modle	OEM #		Front			Rear	
				Fleetline	GasSLX		Fleetline	GasSLX

GULF STREAM COACH (CONT'D)

CLASS A MOTORHOMES (cont'd)

02-04	Yellowstone Series MotorHomes with Freightliner XC Chassis	481700000493	−|−	**85900**	...		...	...
02-06	Friendship & Scenic Cruiser Series MotorHomes with Freightliner XC Chassis	16-16736-000		...	...	O|O	**85029**	...
		16-16737-000	O|O	**83160**	...		...	...
		16-16873-000		...	...	O|O	**85029**	...
		16-16874-000	O|O	**83160**	...		...	...
		16-18103-000	−|−	**85900**	...		...	...
		1616736000		...	...	O|O	**85029**	...
		1616737000	O|O	**83160**	...		...	...
		1616873000		...	...	O|O	**85029**	...
		1616874000	O|O	**83160**	...		...	...
		1618103000	−|−	**85900**	...		...	...
		141700131809		...	...	O|O	**85029**	...
		141700131810	O|O	**83160**	...		...	...
		481700000493	−|−	**85900**	...		...	...
03-06	Atrium Series MotorHomes with Freightliner XC Chassis	16-16736-000		...	...	O|O	**85029**	...
		16-16737-000	O|O	**83160**	...		...	...
		16-16873-000		...	...	O|O	**85029**	...
		16-16874-000	O|O	**83160**	...		...	...
		16-18103-000	−|−	**85900**	...		...	...
		1616736000		...	...	O|O	**85029**	...
		1616737000	O|O	**83160**	...		...	...
		1616873000		...	...	O|O	**85029**	...
		1616874000	O|O	**83160**	...		...	...
		1618103000	−|−	**85900**	...		...	...
		141700131809		...	...	O|O	**85029**	...
		141700131810	O|O	**83160**	...		...	...
		481700000493	−|−	**85900**	...		...	...
2002	Independence Series MotorHomes with Freightliner XC Chassis	16-16736-000		...	...	O|O	**85029**	...
		16-16737-000	O|O	**83160**	...		...	...
		16-16873-000		...	...	O|O	**85029**	...
		16-16874-000	O|O	**83160**	...		...	...
		16-18103-000	−|−	**85900**	...		...	...
		1616736000		...	...	O|O	**85029**	...
		1616737000	O|O	**83160**	...		...	...
		1616873000		...	...	O|O	**85029**	...
		1616874000	O|O	**83160**	...		...	...
		1618103000	−|−	**85900**	...		...	...
		141700131809		...	...	O|O	**85029**	...
		141700131810	O|O	**83160**	...		...	...
		481700000493	−|−	**85900**	...		...	...

CLASS C MOTORHOMES

99-06	Cavalier Series MotorHomes with Ford E350 & E450 Chassis	ASH-1136		...	...	−|O	**G63623**	...
		ASH-1154	−|O	**G63622**	...		...	...
00-08	Ultra Series MotorHomes with Ford E350 & E450 Chassis	ASH-1136		...	...	−|O	**G63623**	...
		ASH-1154	−|O	**G63622**	...		...	...
03-08	Independence Series MotorHomes with Ford E350 & E450 Chassis	ASH-1136		...	...	−|O	**G63623**	...
		ASH-1154	−|O	**G63622**	...		...	...
04-08	Endura Series MotorHomes with Chevy Kodiak Chassis	.....	−|−	**83136**	...		...	...
02-09	Yellowstone Series MotorHomes with Ford E350 & E450 Chassis	ASH-1136		...	...	−|O	**G63623**	...
		ASH-1154	−|O	**G63622**	...		...	...
02-20	BT Cruiser Series MotorHomes with Ford E350 & E450 Chassis	ASH-1136		...	...	−|O	**G63623**	...
93-20	Conquest Series MotorHomes with Ford E350 & E450 Chassis	ASH-1136		...	...	−|O	**G63623**	...
02-22	BT Cruiser Series MotorHomes with Ford E350 & E450 Chassis	ASH-1154	−|O	**G63622**	...		...	...

APPLICATION GUIDE - TRUCKS, TRAILERS AND BUSES

Year Ano Année	Model Modelo Modle	OEM #		Front			Rear	
				Fleetline	GasSLX		Fleetline	GasSLX
93-22	Conquest Series MotorHomes with Ford E350 & E450 Chassis	ASH-1154	–|O	G63622	...		...	...

HARDEE MFG

	Models with O.E.M. Number	8030223		...	...	O|O	83207	89407
		AS789B		...	...	O|O	85014	...

HAUSMAN

	Models with O.E.M. Number	695110		...	...	–|–	85318	...
		695119		...	...	O|O	85702	...

HENDRICKSON TRAILER SUSPENSION SYSTEMS

ADDITIONAL APPLICATIONS

	AB-32-001 Models	A1667		...	...	O|O	85000	89436
		A-1667		...	...	O|O	85000	89436
	HK190T (Slider Air Suspension)	A21292		...	...	O|O	85052	...
		A-21292		...	...	O|O	85052	...
	HK230 (Slider Air Suspension)	A21292		...	...	O|O	85052	...
		A-21292		...	...	O|O	85052	...
	HS190T (Slider Air Suspension)	A20001		...	...	O|O	83389	89436
		A-20001		...	...	O|O	83389	89436
	HS230 (Slider Air Suspension)	A20002		...	...	O|O	85000	89436
		A-20002		...	...	O|O	85000	89436
	MT-45,MTL45,MTL-50	S1667		...	...	O|O	85000	89436
		S-1667		...	...	O|O	85000	89436
	TDC-014	665267		...	...	O|O	85029	...
		A2212		...	...	O|O	85029	...
		A-2212		...	...	O|O	85029	...

ADDITIONAL O.E.M. INTERCHANGES

	Models with O.E.M. Number	98583-020		...	...	O|O	89414	...
		671779		...	...	O|O	89414	...
		680616		...	...	O|O	89430	...
		98583020		...	...	O|O	89414	...

HLP PARALIFT

	Auxiliary Liftable Steerable System (HL)	A-14496	O|O	646155

HLU PARALIFT ULTRA

	Auxiliary Liftable Steerable System (HL)	A-14496	O|O	646155

INTRAAX

	AA230T & AA250T Models with O.E.M. Number	A20002		...	...	O|O	85000	89436
		A20126		...	...	O|O	85323	89436
		A20889		...	...	O|O	85323	89436
		A-20002		...	...	O|O	85000	89436
		A-20126		...	...	O|O	85323	89436
		A-20889		...	...	O|O	85323	89436
		B22345		...	...	O|O	85911	...
		B-22345		...	...	O|O	85911	...
	AAEDL Models	B23316		...	...	O|O	85382	...
		B24023		...	...	O|O	85738	...
		B24579		...	...	O|O	85939	...
		B-23316		...	...	O|O	85382	...
		B-24023		...	...	O|O	85738	...
		B-24579		...	...	O|O	85939	...
	AAEDT 30K Models	B23361		...	...	O|O	85911	...
		B25436		...	...	O|O	85916	89430
		B25515		...	...	O|O	85338	...

APPLICATION GUIDE - TRUCKS, TRAILERS AND BUSES

Year Ano Année	Model Modelo Modle	OEM #		Front			Rear	
				Fleetline	GasSLX		Fleetline	GasSLX

HENDRICKSON TRAILER SUSPENSION SYSTEMS (CONT'D)

INTRAAX (cont'd)

	AAEDT 30K Models	B-23361		...	...		85911	...
		B-25436		...	...		85916	89430
		B-25515		...	...		85338	...
	AAL 23K, 25K & 30K Models	A2212		...	...		85029	...
		A-2212		...	...		85029	...
		B20345		...	...		85345	...
		B23566		...	...		85000	89436
		B23651		...	...		85045	...
		B25436		...	...		85916	89430
		B25437		...	...		85337	...
		B-20345		...	...		85345	...
		B-23566		...	...		85000	89436
		B-23651		...	...		85045	...
		B-25436		...	...		85916	89430
		B-25437		...	...		85337	...
	AANL 23K Models	B23651		...	...		85045	...
		B24579		...	...		85939	...
		B25515		...	...		85338	...
		B-23651		...	...		85045	...
		B-24579		...	...		85939	...
		B-25515		...	...		85338	...
	AANLS - 20K with Rear shocks with 9" Ride Height	B23316		...	...		85382	...
		B-23316		...	...		85382	...
	AANT 23K Models	B23361		...	...		85911	...
		B23566		...	...		85000	89436
		B24023		...	...		85738	...
		B24125		...	...		85323	89436
		B-23361		...	...		85911	...
		B-23566		...	...		85000	89436
		B-24023		...	...		85738	...
		B-24125		...	...		85323	89436
	AAT 23K Models	B23361		...	...		85911	...
		B23566		...	...		85000	89436
		B24023		...	...		85738	...
		B24125		...	...		85323	89436
		B-23361		...	...		85911	...
		B-23566		...	...		85000	89436
		B-24023		...	...		85738	...
		B-24125		...	...		85323	89436
	AAT 25K Models	B23361		...	...		85911	...
		B23566		...	...		85000	89436
		B24023		...	...		85738	...
		B24125		...	...		85323	89436
		B-23361		...	...		85911	...
		B-23566		...	...		85000	89436
		B-24023		...	...		85738	...
		B-24125		...	...		85323	89436
	AAT 30K Models	B24023		...	...		85738	...
		B-24023		...	...		85738	...
	AAZL 23K / 46K Models	B23566		...	...		85000	89436
		B23651		...	...		85045	...
		B24023		...	...		85738	...
		B24579		...	...		85939	...
		B-23566		...	...		85000	89436

HENDRICKSON TRAILER SUSPENSION SYSTEMS (CONT'D)

INTRAAX (cont'd)

Year Ano Année	Model Modelo Modle	OEM #		Front			Rear	
				Fleetline	GasSLX		Fleetline	GasSLX
	AAZL 23K / 46K Models	B-23651		...	...		85045	...
		B-24023		...	...		85738	...
		B-24579		...	...		85939	...
	AAZNT 23K / 46K / 69K Models	B23566		...	...		85000	89436
		B24023		...	...		85738	...
		B-23566		...	...		85000	89436
		B-24023		...	...		85738	...
	Low Ride Height Models with	B22311		...	...		85045	...
		B22312		...	...		85939	...
		B23013		...	...		85000	89436
		B23315		...	...		85029	...
		B23316		...	...		85382	...
		B-22311		...	...		85045	...
		B-22312		...	...		85939	...
		B-23013		...	...		85000	89436
		B-23315		...	...		85029	...
		B-23316		...	...		85382	...
	Models with O.E.M. Number	57905-2		...	...		85006	...
		60675-004		...	...		85006	...
		98583-019		...	...		85323	89436
		98583-020		...	...		89414	...
		579052		...	...		85006	...
		654951		...	...		85000	89436
		659024		...	...		85052	...
		665190		...	...		85006	...
		665246		...	...		85043	...
		665405		...	...		85030	89440
		665406		...	...		85010	...
		665531		...	...		85000	89436
		665532		...	...		85013	89414
		665533		...	...		85005	89430
		665536		...	...		85000	89436
		665693		...	...		85064	...
		665694		...	...		85052	...
		665698		...	...		85911	...
		665733		...	...		85045	...
		665756		...	...		85000	89436
		665758		...	...		85064	...
		665759		...	...		85052	...
		665760		...	...		85045	...
		665761		...	...		85911	...
		665763		...	...		85079	...
		665764		...	...		85029	...
		665765		...	...		83150	...
		665766		...	...		85000	89436
		665767		...	...		85045	...
		671779		...	...		89414	...
		671948		...	...		85000	89436
		680102		...	...		85712	...
		680341		...	...		85323	89436
		680463		...	...		89440	...
		680467		...	...		85323	89436
		680509		...	...		85738	...
		680565		...	...		85738	...

HENDRICKSON TRAILER SUSPENSION SYSTEMS (CONT'D)

Year Ano Année	Model Modelo Modle	OEM #	Front Fleetline	Front GasSLX	Rear Fleetline	Rear GasSLX
	Models with O.E.M. Number	680566	...	...	85938	...
		680568	...	...	85323	89436
		680570	...	...	89437	...
		680571	...	...	85738	...
		680573	...	...	85939	...
		680579	...	...	85939	...
		680614	...	...	85338	...
		680616	...	...	89430	...
		680617	...	...	85337	...
		680702	...	...	85323	89436
		680756	...	...	85323	89436
		680769	...	...	85911	...
		680776	...	...	85338	...
		60675004	...	...	85006	...
		98583019	...	...	85323	89436
		98583020	...	...	89414	...
		A1668	...	...	85000	89436
		A2230	...	...	85005	89430
		A2232	...	...	85005	89430
		A2471	...	...	85006	...
		A4089	...	...	83209	89414
		A4890	...	...	85712	...
		A6156	...	...	85301	...
		A10023	...	...	85000	89436
		A11931	...	...	85000	89436
		A14583	...	...	85000	89436
		A20345	...	...	85345	...
		A20886	...	...	85030	89440
		A20887	...	...	85005	89430
		A22401	...	...	85043	...
		A-1668	...	...	85000	89436
		A-2230	...	...	85005	89430
		A-2232	...	...	85005	89430
		A-2240-1	...	...	85043	...
		A-2471	...	...	85006	...
		A-4089	...	...	83209	89414
		A-4890	...	...	85712	...
		A-6156	...	...	85301	...
		A-10023	...	...	85000	89436
		A-11931	...	...	85000	89436
		A-14583	...	...	85000	89436
		A-20345	...	...	85345	...
		A-20886	...	...	85030	89440
		A-20887	...	...	85005	89430
		B21832	...	...	85323	89436
		B21936	...	...	85064	...
		B21994	...	...	85938	...
		B21995	...	...	85344	...
		B22715	...	...	85000	89436
		B23014	...	...	85738	...
		B23290	...	...	83150	...
		B23362	...	...	89437	...
		B25174	...	...	85029	...
		B26652	...	...	85000	89436
		B27058	...	...	83128	89436

APPLICATION GUIDE - TRUCKS, TRAILERS AND BUSES

HENDRICKSON TRAILER SUSPENSION SYSTEMS (CONT'D)

Year Ano Année	Model Modelo Modle	OEM #	Front		Rear	
			Fleetline	GasSLX	Fleetline	GasSLX
	Models with O.E.M. Number	B27747	...	...	85911	...
		B29432	...	...	85323	89436
		B29678	...	...	85911	...
		B29826	...	...	85338	...
		B33312	...	...	85338	...
		B33313	...	...	85338	...
		B-21832	...	...	85323	89436
		B-21936	...	...	85064	...
		B-21994	...	...	85938	...
		B-21995	...	...	85344	...
		B-22715	...	...	85000	89436
		B-23014	...	...	85738	...
		B-23290	...	...	83150	...
		B-23362	...	...	89437	...
		B-25174	...	...	85029	...
		B-26652	...	...	85000	89436
		B-27058	...	...	83128	89436
		B-27747	...	...	85911	...
		B-29432	...	...	85323	89436
		B-29678	...	...	85911	...
		B-29826	...	...	85338	...
		B-33312	...	...	85338	...
		B-33313	...	...	85338	...
		B-33314	...	...	85939	...
		B-33314L	...	...	85939	...
		NS500699	...	...	85005	89430
		S1668	...	...	85000	89436
		S2160	...	...	85014	...
		S2212	...	...	85029	...
		S2213	...	...	85010	...
		S2218	...	...	85030	89440
		S2230	...	...	85005	89430
		S2232	...	...	85005	89430
		S2240	...	...	85013	89414
		S2471	...	...	85006	...
		S4084	...	...	85005	89430
		S4089	...	...	83209	89414
		S4890	...	...	85712	...
		S10348	...	...	85043	...
		S14583	...	...	85000	89436
		S20001	...	...	83389	89436
		S20002	...	...	85000	89436
		S20126	...	...	85323	89436
		S20345	...	...	85345	...
		S20886	...	...	85030	89440
		S20887	...	...	85005	89430
		S20889	...	...	85323	89436
		S21292	...	...	85052	...
		S21553	...	...	85738	...
		S21699	...	...	87018	...
		S21832	...	...	85323	89436
		S21936	...	...	85064	...
		S21947	...	...	85052	...
		S22311	...	...	85045	...
		S22312	...	...	85939	...

HENDRICKSON TRAILER SUSPENSION SYSTEMS (CONT'D)

Year Ano Année	Model Modelo Modle	OEM #	Front Fleetline	Front GasSLX		Rear Fleetline	Rear GasSLX
	Models with O.E.M. Number	S22345	...	...	O|O	85911	...
		S22715	...	...	O|O	85000	89436
		S22862	...	...	O|O	85045	...
		S23013	...	...	O|O	85000	89436
		S23014	...	...	O|O	85738	...
		S23290	...	...	O|O	83150	...
		S23315	...	...	O|O	85029	...
		S23316	...	...	O|O	85382	...
		S23361	...	...	O|O	85911	...
		S23362	...	...	O|O	89437	...
		S23548	...	...	O|O	85079	...
		S23649	...	...	O|O	85064	...
		S23650	...	...	O|O	85052	...
		S23651	...	...	O|O	85045	...
		S23743	...	...	O|O	85938	...
		S24023	...	...	O|O	85738	...
		S24088	...	...	O|O	83389	89436
		S24088	...	...	O|O	85000	89436
		S24125	...	...	O|O	85323	89436
		S24579	...	...	O|O	85939	...
		S25437	...	...	O|O	85337	...
		S25515	...	...	O|O	85338	...
		S26652	...	...	O|O	85000	89436
		S29432	...	...	O|O	85323	89436
		S29678	...	...	O|O	85911	...
		S29826	...	...	O|O	85338	...
		S33312	...	...	O|O	85338	...
		S33313	...	...	O|O	85338	...
		S33313L	...	...	O|O	85338	...
		S-1668	...	...	O|O	85000	89436
		S-2160	...	...	O|O	85014	...
		S-2212	...	...	O|O	85029	...
		S-2213	...	...	O|O	85010	...
		S-2218	...	...	O|O	85030	89440
		S-2230	...	...	O|O	85005	89430
		S-2232	...	...	O|O	85005	89430
		S-2240	...	...	O|O	85013	89414
		S-2471	...	...	O|O	85006	...
		S-4084	...	...	O|O	85005	89430
		S-4089	...	...	O|O	83209	89414
		S-4890	...	...	O|O	85712	...
		S-10348	...	...	O|O	85043	...
		S-14583	...	...	O|O	85000	89436
		S-20001	...	...	O|O	83389	89436
		S-20002	...	...	O|O	85000	89436
		S-20126	...	...	O|O	85323	89436
		S-20345	...	...	O|O	85345	...
		S-20886	...	...	O|O	85030	89440
		S-20887	...	...	O|O	85005	89430
		S-20889	...	...	O|O	85323	89436
		S-21292	...	...	O|O	85052	...
		S-21553	...	...	O|O	85738	...
		S-21699	...	...	O|O	87018	...
		S-21832	...	...	O|O	85323	89436
		S-21936	...	...	O|O	85064	...

APPLICATION GUIDE - TRUCKS, TRAILERS AND BUSES

Year Ano Année	Model Modelo Modle	OEM #		Front			Rear	
				Fleetline	GasSLX		Fleetline	GasSLX
HENDRICKSON TRAILER SUSPENSION SYSTEMS (CONT'D)								
	Models with O.E.M. Number	S-21947		...	...		85052	...
		S-22311		...	...		85045	...
		S-22312		...	...		85939	...
		S-22345		...	...		85911	...
		S-22715		...	...		85000	89436
		S-22862		...	...		85045	...
		S-23013		...	...		85000	89436
		S-23014		...	...		85738	...
		S-23290		...	...		83150	...
		S-23315		...	...		85029	...
		S-23316		...	...		85382	...
		S-23361		...	...		85911	...
		S-23362		...	...		89437	...
		S-23548		...	...		85079	...
		S-23649		...	...		85064	...
		S-23650		...	...		85052	...
		S-23651		...	...		85045	...
		S-23743		...	...		85938	...
		S-24023		...	...		85738	...
		S-24088		...	...		83389	89436
		S-24088		...	...		85000	89436
		S-24125		...	...		85323	89436
		S-24579		...	...		85939	...
		S-25437		...	...		85337	...
		S-25515		...	...		85338	...
		S-26652		...	...		85000	89436
		S-29432		...	...		85323	89436
		S-29678		...	...		85911	...
		S-29826		...	...		85338	...
		S-33312		...	...		85338	...
		S-33313		...	...		85338	...
		S-33313L		...	...		85338	...
TOP MOUNT STYLE								
	HT190T (All Models)	A20001		...	...		83389	89436
		A-20001		...	...		83389	89436
	HT230T	A2160		...	...		85014	...
		A2212		...	...		85029	...
		A20002		...	...		85000	89436
		A20126		...	...		85323	89436
		A-2160		...	...		85014	...
		A-2212		...	...		85029	...
		A-20002		...	...		85000	89436
		A-20126		...	...		85323	89436
		B21553		...	...		85738	...
		B21699		...	...		87018	...
		B22345		...	...		85911	...
		B-21553		...	...		85738	...
		B-21699		...	...		87018	...
		B-22345		...	...		85911	...
	HT250T (All Models)	A2212		...	...		85029	...
		A-2212		...	...		85029	...
	HT300T & N-HT300T	A2160		...	...		85014	...
		A20126		...	...		85323	89436
		A-2160		...	...		85014	...
		A-20126		...	...		85323	89436

HENDRICKSON TRAILER SUSPENSION SYSTEMS (CONT'D)

TOP MOUNT STYLE (cont'd)

Year Ano Année	Model Modelo Modle	OEM #	Front Fleetline	Front GasSLX	Rear Fleetline	Rear GasSLX
	HT300T & N-HT300T	B21553	...	...	85738	...
		B21699	...	...	87018	...
		B24579	...	...	85939	...
		B-21553	...	...	85738	...
		B-21699	...	...	87018	...
		B-24579	...	...	85939	...
	T-15-140, -155, -172, 244, -376	A2218	...	...	85030	89440
		A-2218	...	...	85030	89440
	T-15-324	A2160	...	...	85014	...
		A-2160	...	...	85014	...
	T-17-141, -174, -284	A2218	...	...	85030	89440
		A-2218	...	...	85030	89440
	TMB-14-120	A2213	...	...	85010	...
		A-2213	...	...	85010	...
	TMB-17-135	A4084	...	...	85005	89430
		A-4084	...	...	85005	89430

UNDERSLUNG STYLE

Year Ano Année	Model Modelo Modle	OEM #	Front Fleetline	Front GasSLX	Rear Fleetline	Rear GasSLX
	HT190U	A2212	...	...	85029	...
		A20001	...	...	83389	89436
		A20002	...	...	85000	89436
		A-2212	...	...	85029	...
		A-20001	...	...	83389	89436
		A-20002	...	...	85000	89436
		B23649	...	...	85064	...
		B-23649	...	...	85064	...
	HT250U & N-HT250U	A1667	...	...	85000	89436
		A2160	...	...	85014	...
		A2212	...	...	85029	...
		A20002	...	...	85000	89436
		A20126	...	...	85323	89436
		A-1667	...	...	85000	89436
		A-2160	...	...	85014	...
		A-2212	...	...	85029	...
		A-20002	...	...	85000	89436
		A-20126	...	...	85323	89436
		B21553	...	...	85738	...
		B-21553	...	...	85738	...
	HT250US - 5.5 to 6.5" Ride Height (High Damping)	B23744	...	...	85344	...
		B-23744	...	...	85344	...
		S23744	...	...	85344	...
		S-23744	...	...	85344	...
	HT250US (Models with Angled and Frame Clearance Mount)	B23651	...	...	85045	...
		B24579	...	...	85939	...
		B-23651	...	...	85045	...
		B-24579	...	...	85939	...
	HT250US (Models with O.E.M. Number)	B21936	...	...	85064	...
		B21947	...	...	85052	...
		B22862	...	...	85045	...
		B-21936	...	...	85064	...
		B-21947	...	...	85052	...
		B-22862	...	...	85045	...
	HT250US (Models with Remote Shock Mount)	A2212	...	...	85029	...
		A-2212	...	...	85029	...

APPLICATION GUIDE - TRUCKS, TRAILERS AND BUSES

HENDRICKSON TRAILER SUSPENSION SYSTEMS (CONT'D)

UNDERSLUNG STYLE (cont'd)

Year Ano Année	Model Modelo Modle	OEM #	Front Fleetline	Front GasSLX	Rear Fleetline	Rear GasSLX
	HT250US (Models with Remote Shock Mount)	B23316	...	...	85382	...
		B23649	...	...	85064	...
		B23650	...	...	85052	...
		B23743	...	...	85938	...
		B-23316	...	...	85382	...
		B-23649	...	...	85064	...
		B-23650	...	...	85052	...
		B-23743	...	...	85938	...
	HT250US (Models with Standard Shock Mount)	B23548	...	...	85079	...
		B23649	...	...	85064	...
		B23650	...	...	85052	...
		B23651	...	...	85045	...
		B23743	...	...	85938	...
		B24579	...	...	85939	...
		B-23548	...	...	85079	...
		B-23649	...	...	85064	...
		B-23650	...	...	85052	...
		B-23651	...	...	85045	...
		B-23743	...	...	85938	...
		B-24579	...	...	85939	...
	HT250U-Y (All Models)	A20002	...	...	85000	89436
		A-20002	...	...	85000	89436
	HT300U & N-HT300U	A20126	...	...	85323	89436
		A-20126	...	...	85323	89436
		B21699	...	...	87018	...
		B-21699	...	...	87018	...
	T30-US-9, -17	A10348	...	...	85043	...
		A-10348	...	...	85043	...
	T-4-392	A2160	...	...	85014	...
		A-2160	...	...	85014	...
	T-6-062, -295, -370, -422	A1667	...	...	85000	89436
		A-1667	...	...	85000	89436
	T-6-071	A2212	...	...	85029	...
		A-2212	...	...	85029	...
	T-9-084	A2240	...	...	85013	89414
		A-2240	...	...	85013	89414
	T-9-106, -278, -313	A4084	...	...	85005	89430
		A-4084	...	...	85005	89430
	T-9-175	A2160	...	...	85014	...
		A-2160	...	...	85014	...
	T-9-325	A2218	...	...	85030	89440
		A-2218	...	...	85030	89440
	T-9-390	A2213	...	...	85010	...
		A-2213	...	...	85010	...
	T-12-139	A2213	...	...	85010	...
		A-2213	...	...	85010	...
	T-23-US-9-011	A2213	...	...	85010	...
		A-2213	...	...	85010	...

VANTRAAX

	HKA180	B24088	...	...	83389	89436
		B24088	...	...	85000	89436
		B-24088	...	...	83389	89436
		B-24088	...	...	85000	89436

HENDRICKSON TRAILER SUSPENSION SYSTEMS (CONT'D)

VANTRAAX (cont'd)

Year Ano Année	Model Modelo Modle	OEM #	Front Fleetline	Front GasSLX	Rear Fleetline	Rear GasSLX
	HKA180	S24088	...	...	83389	89436
		S24088	...	...	85000	89436
		S-24088	...	...	83389	89436
		S-24088	...	...	85000	89436
	HKA200	B23566	...	...	85000	89436
		B-23566	...	...	85000	89436
		S23566	...	...	85000	89436
		S-23566	...	...	85000	89436
	HKA250	B24023	...	...	85738	...
		B-24023	...	...	85738	...
	HKAL 46K Models	B23566	...	...	85000	89436
		B-23566	...	...	85000	89436
	HKANT 40K	B24088	...	...	83389	89436
		B24088	...	...	85000	89436
		B-24088	...	...	83389	89436
		B-24088	...	...	85000	89436
		S24088	...	...	83389	89436
		S24088	...	...	85000	89436
		S-24088	...	...	83389	89436
		S-24088	...	...	85000	89436
	HKANT 46K	B23566	...	...	85000	89436
		B-23566	...	...	85000	89436
		S23566	...	...	85000	89436
		S-23566	...	...	85000	89436
	HKANT 69K23	S23566	...	...	85000	89436
		S-23566	...	...	85000	89436
	HKARL 46K	B23566	...	...	85000	89436
		B25436	...	...	85916	89430
		B-23566	...	...	85000	89436
		B-25436	...	...	85916	89430
		S23566	...	...	85000	89436
		S25436	...	...	85916	89430
		S-23566	...	...	85000	89436
		S-25436	...	...	85916	89430
	HKAT 46K	B23566	...	...	85000	89436
		B-23566	...	...	85000	89436
		S23566	...	...	85000	89436
		S-23566	...	...	85000	89436
	HKAT 50K	B24023	...	...	85738	...
		B-24023	...	...	85738	...
		S24023	...	...	85738	...
		S-24023	...	...	85738	...
	HKAT 69K	B24023	...	...	85738	...
		B-24023	...	...	85738	...
		S24023	...	...	85738	...
		S-24023	...	...	85738	...

HENDRICKSON TRUCK SUSPENSION SYSTEMS

ADDITIONAL APPLICATIONS

	Conventional Hino Models with Hendrickson Comfort Air Suspension	60670-020		...	...		83148	...

HENDRICKSON TRUCK SUSPENSION SYSTEMS (CONT'D)

ADDITIONAL APPLICATIONS (cont'd)

Year Ano Année	Model Modelo Modle	OEM #		Front			Rear	
				Fleetline	GasSLX		Fleetline	GasSLX
	Conventional Hino Models with Hendrickson Comfort Air Suspension	60670020		...	...	○|○	83148	...
	HAS 460 Suspensions with O.E.M. Number	60675-12		...	...	○|○	85638	...
		6067512		...	...	○|○	85638	...
	Hendrickson Rear Air Suspension used on Conventional Hino Models (23,000 lb Capacity)	60670-018		...	...	○|○	83166	...
		60670018		...	...	○|○	83166	...
	HMX 400/460 Haulmax with 16.5" Saddle Height	60680-004		...	...		83143	...
		60680-004L		...	...		83143	...
		60680004		...	...		83143	...
		60680004L		...	...		83143	...
	HMX 400/460 Haulmax with 17.5" or 18.5" Saddle Height	60680-005		...	...		83142	...
		60680-005L		...	...		83142	...
		60680005		...	...		83142	...
		60680005L		...	...		83142	...
	HTS 210 For Spartan Chassis (Type C School Bus Applications)	60665-025		...	...	○|○	85036	89405
		60665-025L		...	...	○|○	85036	89405
		60665025		...	...	○|○	85036	89405
		60665025L		...	...	○|○	85036	89405
	MaxAir / AL-405 Models	57241-006		...	...		83111	...
		57241-006L		...	...		83111	...
		57241006		...	...		83111	...
		57241006L		...	...		83111	...
	Parasteer Suspensions	59483-000	○|○	85919	...		...	...
		60665-005	○|○	85919	...		...	...
		60665-005L	○|○	85919	...		...	...
		60998-002	○|○	85919	...		...	...
		60998-002L	○|○	85919	...		...	...
		59483000	○|○	85919	...		...	...
		60665005	○|○	85919	...		...	...
		60665005L	○|○	85919	...		...	...
		60998002	○|○	85919	...		...	...
		60998002L	○|○	85919	...		...	...

AIRTEK - SERIES

	Airtek Front	58913-003	○|○	85932	89453		...	...
		58913-003L	○|○	85932	89453		...	...
		58913-007	○|○	85959	...		...	...
		58913-007L	○|○	85959	...		...	...
		58913-008	○|○	85959	...		...	...
		58913-008L	○|○	85959	...		...	...
		58913-009	○|○	85959	...		...	...
		58913-009L	○|○	85959	...		...	...
		58913-012	○|○	85932	89453		...	...
		58913-012L	○|○	85932	89453		...	...
		64838-001	○|○	85933	89454		...	...
		64838-001L	○|○	85933	89454		...	...
		64838-002	○|○	85933	89454		...	...
		64838-002L	○|○	85933	89454		...	...
		64838-003	○|○	85933	89454		...	...
		64838-003L	○|○	85933	89454		...	...
		65992-001	○|○	85955	...		...	...
		65992-002	○|○	85955	...		...	...
		65992-002L	○|○	85955	...		...	...
		65992-003	○|○	85959	...		...	...

APPLICATION GUIDE - TRUCKS, TRAILERS AND BUSES

Year Ano Année	Model Modelo Modle	OEM #		Front			Rear	
				Fleetline	GasSLX		Fleetline	GasSLX

HENDRICKSON TRUCK SUSPENSION SYSTEMS (CONT'D)

AIRTEK - SERIES (cont'd)

	Airtek Front	58913003	O|O	85932	89453		...	...
		58913003L	O|O	85932	89453		...	...
		58913007	O|O	85959	...		...	...
		58913007L	O|O	85959	...		...	...
		58913008	O|O	85959	...		...	...
		58913008L	O|O	85959	...		...	...
		58913009	O|O	85959	...		...	...
		58913009L	O|O	85959	...		...	...
		58913012	O|O	85932	89453		...	...
		58913012L	O|O	85932	89453		...	...
		64838001	O|O	85933	89454		...	...
		64838001L	O|O	85933	89454		...	...
		64838002	O|O	85933	89454		...	...
		64838002L	O|O	85933	89454		...	...
		64838003	O|O	85933	89454		...	...
		64838003L	O|O	85933	89454		...	...
		65992001	O|O	85955	...		...	...
		65992002	O|O	85955	...		...	...
		65992002L	O|O	85955	...		...	...
		65992003	O|O	85959	...		...	...
		471700000456	O|O	85959	...		...	...
		471700006269	O|O	85932	89453		...	...

ALL AMERICAN SERIES (FE & RE MODELS)

	Buses with Hendrickson 14,600 lb Capacity-Left Hand Drive Steertek Axle	58913-011	O|O	85959	...		...	...
		58913-011L	O|O	85959	...		...	...
		58913011	O|O	85959	...		...	...
		58913011L	O|O	85959	...		...	...

COMFORT AIR - SERIES

	Conventional Hino Models with Single Axle Air Suspension	60670-013		...	...	O|O	83148	...
		60670-017		...	...	O|O	83148	...
		60670013		...	...	O|O	83148	...
		60670017		...	...	O|O	83148	...
	Models with O.E.M. Number	60998-001		...	...	O|O	85006	...
		60998-003		...	...	O|O	85006	...
		60998001		...	...	O|O	85006	...
		60998003		...	...	O|O	85006	...
		471700131545		...	...	O|O	85006	...

FIREMAAX - SERIES

	Firemaax 240 Air Suspensions	60657-003		...	...	O|O	85072	...
		60657-003L		...	...	O|O	85072	...
		60665-011		...	...	O|O	85967	...
		060665-014		...	...	O|O	85962	...
		060665-018		...	...	O|O	85961	...
		60665-018L		...	...	O|O	85961	...
		60657003		...	...	O|O	85072	...
		60657003L		...	...	O|O	85072	...
		60665011		...	...	O|O	85967	...
		60665014		...	...	O|O	85962	...
		060665014		...	...	O|O	85962	...
		60665018		...	...	O|O	85961	...
		60665018L		...	...	O|O	85961	...

APPLICATION GUIDE - TRUCKS, TRAILERS AND BUSES

Year Ano Année	Model Modelo Modle	OEM #		Front			Rear	
				Fleetline	GasSLX		Fleetline	GasSLX

HENDRICKSON TRUCK SUSPENSION SYSTEMS (CONT'D)

FIREMAAX - SERIES (cont'd)

	Firemaax 270 Air Suspensions	60665-013		...	...	O|O	**85965**	...
		60665013		...	...	O|O	**85965**	...
	Firemaax 480 Air Suspensions	60657-003		...	...	O|O	**85072**	...
		60657-003L		...	...	O|O	**85072**	...
		60665-011		...	...	O|O	**85967**	...
		060665-014		...	...	O|O	**85962**	...
		060665-018		...	...	O|O	**85961**	...
		60665-018L		...	...	O|O	**85961**	...
		60657003		...	...	O|O	**85072**	...
		60657003L		...	...	O|O	**85072**	...
		60665011		...	...	O|O	**85967**	...
		60665014		...	...	O|O	**85962**	...
		060665014		...	...	O|O	**85962**	...
		60665018		...	...	O|O	**85961**	...
		60665018L		...	...	O|O	**85961**	...
	Firemaax 540 Air Suspensions	60665-013		...	...	O|O	**85965**	...
		60665013		...	...	O|O	**85965**	...
	Firemaax EX 242 Air Suspensions	60657-003		...	...	O|O	**85072**	...
		60657-003L		...	...	O|O	**85072**	...
		60665-011		...	...	O|O	**85967**	...
		60657003		...	...	O|O	**85072**	...
		60657003L		...	...	O|O	**85072**	...
		60665011		...	...	O|O	**85967**	...
	Firemaax EX 272 Air Suspensions	60665-013		...	...	O|O	**85965**	...
		60665013		...	...	O|O	**85965**	...
	Firemaax EX 482 Air Suspensions	60657-003		...	...	O|O	**85072**	...
		60657-003L		...	...	O|O	**85072**	...
		60665-011		...	...	O|O	**85967**	...
		60657003		...	...	O|O	**85072**	...
		60657003L		...	...	O|O	**85072**	...
		60665011		...	...	O|O	**85967**	...
	Firemaax EX 542 Air Suspensions	60665-013		...	...	O|O	**85965**	...
		60665013		...	...	O|O	**85965**	...

HA - SERIES

	HA - 180 (Used on all except Mack)	47902-8		...	...	O|O	**83122**	**89406**
		47902-13		...	...	O|O	**83122**	**89406**
		479028		...	...	O|O	**83122**	**89406**
		4790213		...	...	O|O	**83122**	**89406**
	HA - 200 (Used on all except Mack)	47902-8		...	...	O|O	**83122**	**89406**
		47902-13		...	...	O|O	**83122**	**89406**
		479028		...	...	O|O	**83122**	**89406**
		4790213		...	...	O|O	**83122**	**89406**
	HA - 230 (Used on all except Mack)	47902-8		...	...	O|O	**83122**	**89406**
		47902-13		...	...	O|O	**83122**	**89406**
		479028		...	...	O|O	**83122**	**89406**
		4790213		...	...	O|O	**83122**	**89406**
	HA - 360 (Used on all except Mack)	47902-8		...	...	O|O	**83122**	**89406**
		47902-13		...	...	O|O	**83122**	**89406**
		479028		...	...	O|O	**83122**	**89406**
		4790213		...	...	O|O	**83122**	**89406**
	HA - 400 (Used on all except Mack)	47902-8		...	...	O|O	**83122**	**89406**
		47902-13		...	...	O|O	**83122**	**89406**
		479028		...	...	O|O	**83122**	**89406**

APPLICATION GUIDE - TRUCKS, TRAILERS AND BUSES

Year Ano Année	Model Modelo Modle	OEM #		Front			Rear	
				Fleetline	GasSLX		Fleetline	GasSLX

HENDRICKSON TRUCK SUSPENSION SYSTEMS (CONT'D)

HA - SERIES (cont'd)

	HA - 400 (Used on all except Mack)	4790213		...	...	O|O	83122	89406
	HA - 460 (Used on all except Mack)	47902-8		...	...	O|O	83122	89406
		47902-13		...	...	O|O	83122	89406
		479028		...	...	O|O	83122	89406
		4790213		...	...	O|O	83122	89406
	HA-360/400/460 Edge System High Torque Rise	60675-003		...	...	O|O	85976	...
		60675-003L		...	...	O|O	85976	...
		60675003		...	...	O|O	85976	...
		60675003L		...	...	O|O	85976	...
	HA Series Air Suspension (All Models used on Mack)	47902-9		...	...	O|O	83123	89405
		47902-19		...	...	O|O	83123	89405
		479029		...	...	O|O	83123	89405
		4790219		...	...	O|O	83123	89405

HAS - SERIES

	HAS - 40LH	60680-001		...	...		83111	...
		60680-001L		...	...		83111	...
		60685-001		...	...		85977	...
		60680001		...	...		83111	...
		60680001L		...	...		83111	...
		60685001		...	...		85977	...
	HAS - 120L	60670-010		...	...	O|O	83149	...
		60670010		...	...	O|O	83149	...
	HAS - 150L	60670-003		...	...	O|O	83149	...
		60670003		...	...	O|O	83149	...
	HAS - 190	60670-005		...	...	O|O	83137	...
		60675-003		...	...	O|O	85976	...
		60675-003L		...	...	O|O	85976	...
		60670005		...	...	O|O	83137	...
		60675003		...	...	O|O	85976	...
		60675003L		...	...	O|O	85976	...
	HAS - 190L	60670-008		...	...	O|O	83123	89405
		60670-008L		...	...	O|O	83123	89405
		60670008		...	...	O|O	83123	89405
		60670008L		...	...	O|O	83123	89405
	HAS - 210	60670-005		...	...	O|O	83137	...
		60675-003		...	...	O|O	85976	...
		60675-003L		...	...	O|O	85976	...
		60670005		...	...	O|O	83137	...
		60675003		...	...	O|O	85976	...
		60675003L		...	...	O|O	85976	...
	HAS - 210L	60670-008		...	...	O|O	83123	89405
		60670-008L		...	...	O|O	83123	89405
		60670008		...	...	O|O	83123	89405
		60670008L		...	...	O|O	83123	89405
	HAS - 230	60670-005		...	...	O|O	83137	...
		60675-003		...	...	O|O	85976	...
		60675-003L		...	...	O|O	85976	...
		60670005		...	...	O|O	83137	...
		60675003		...	...	O|O	85976	...
		60675003L		...	...	O|O	85976	...
	HAS - 230L	60670-008		...	...	O|O	83123	89405
		60670-008L		...	...	O|O	83123	89405
		60670008		...	...	O|O	83123	89405

HENDRICKSON TRUCK SUSPENSION SYSTEMS (CONT'D)

HAS - SERIES (cont'd)

Year Ano Année	Model Modelo Modle	OEM #	Front Fleetline	Front GasSLX	Rear Fleetline	Rear GasSLX
	HAS - 230L	60670008L	...	...	83123	89405
	HAS - 360	60670-005	...	...	83137	...
		60675-003	...	...	85976	...
		60675-003L	...	...	85976	...
		60670005	...	...	83137	...
		60675003	...	...	85976	...
		60675003L	...	...	85976	...
	HAS - 400	47902-25	...	...	83125	...
		60670-005	...	...	83137	...
		60670-007	...	...	83144	...
		60670-007L	...	...	83144	...
		60675-003	...	...	85976	...
		60675-003L	...	...	85976	...
		60675-006	...	...	85909	...
		60675-006L	...	...	85909	...
		4790225	...	...	83125	...
		60670005	...	...	83137	...
		60670007	...	...	83144	...
		60670007L	...	...	83144	...
		60675003	...	...	85976	...
		60675003L	...	...	85976	...
		60675006	...	...	85909	...
		60675006L	...	...	85909	...
	HAS - 400L	60670-008	...	...	83123	89405
		60670-008L	...	...	83123	89405
		60670008	...	...	83123	89405
		60670008L	...	...	83123	89405
	HAS - 402	60670-005	...	...	83137	...
		60670-007	...	...	83144	...
		60670-007L	...	...	83144	...
		60675-003	...	...	85976	...
		60675-003L	...	...	85976	...
		60675-006	...	...	85909	...
		60675-006L	...	...	85909	...
		60670005	...	...	83137	...
		60670007	...	...	83144	...
		60670007L	...	...	83144	...
		60675003	...	...	85976	...
		60675003L	...	...	85976	...
		60675006	...	...	85909	...
		60675006L	...	...	85909	...
	HAS - 402L	60670-008	...	...	83123	89405
		60670-008L	...	...	83123	89405
		60670008	...	...	83123	89405
		60670008L	...	...	83123	89405
	HAS - 460	60670-005	...	...	83137	...
		60670-007	...	...	83144	...
		60670-007L	...	...	83144	...
		60675-003	...	...	85976	...
		60675-003L	...	...	85976	...
		60675-006	...	...	85909	...
		60675-006L	...	...	85909	...
		60670005	...	...	83137	...
		60670007	...	...	83144	...

HENDRICKSON TRUCK SUSPENSION SYSTEMS (CONT'D)

HAS - SERIES (cont'd)

Year / Ano / Année	Model / Modelo / Modle	OEM #		Front			Rear	
				Fleetline	GasSLX		Fleetline	GasSLX
	HAS - 460	60670007L		...	...	O|O	83144	...
		60675003		...	...	O|O	85976	...
		60675003L		...	...	O|O	85976	...
		60675006		...	...	O|O	85909	...
		60675006L		...	...	O|O	85909	...
	HAS - 460L	60670-008		...	...	O|O	83123	89405
		60670-008L		...	...	O|O	83123	89405
		60670008		...	...	O|O	83123	89405
		60670008L		...	...	O|O	83123	89405
	Models with O.E.M. Number	60675-014		...	...	O|O	85978	...
		606758Q		...	...	O|O	85976	...
		60675014		...	...	O|O	85978	...

HN - SERIES

96-15	HN - 522	60680-003		...	...		83112	...
		60680-003L		...	...		83112	...
		60680003		...	...		83112	...
		60680003L		...	...		83112	...
	HN - 400	60670-002		...	...	O|O	83207	89407
		60670-002L		...	...	O|O	83207	89407
		60680-003		...	...		83112	...
		60680-003L		...	...		83112	...
		60670002		...	...	O|O	83207	89407
		60670002L		...	...	O|O	83207	89407
		60680003		...	...		83112	...
		60680003L		...	...		83112	...
	HN - 402	57241-003		...	...		83112	...
		60680-003		...	...		83112	...
		60680-003L		...	...		83112	...
		57241003		...	...		83112	...
		60680003		...	...		83112	...
		60680003L		...	...		83112	...
	HN - 460	57241-003		...	...		83112	...
		60670-002		...	...	O|O	83207	89407
		60670-002L		...	...	O|O	83207	89407
		60680-003		...	...		83112	...
		60680-003L		...	...		83112	...
		57241003		...	...		83112	...
		60670002		...	...	O|O	83207	89407
		60670002L		...	...	O|O	83207	89407
		60680003		...	...		83112	...
		60680003L		...	...		83112	...
	HN - 462	57241-003		...	...		83112	...
		60680-003		...	...		83112	...
		60680-003L		...	...		83112	...
		57241003		...	...		83112	...
		60680003		...	...		83112	...
		60680003L		...	...		83112	...
	HNT - 460	47902-18		...	...	O|O	85030	89440
		4790218		...	...	O|O	85030	89440

HTB 400 LT - SERIES

	HTB 400LT Rear Air Suspensions	60657-006		...	...	O|O	85102	...

HENDRICKSON TRUCK SUSPENSION SYSTEMS (CONT'D)

HTB 400 LT - SERIES (cont'd)

Year Ano Année	Model Modelo Modle	OEM #	Front Fleetline	Front GasSLX	Rear Fleetline	Rear GasSLX
	HTB 400LT Rear Air Suspensions	60657-010	...	...	85102	...
		60657-011	...	...	85102	...
		60657006	...	...	85102	...
		60657010	...	...	85102	...
		60657011	...	...	85102	...
	Hendrickson Comfort Air Rear Air Suspension	60670-006	...	...	83147	...
		60670-006L	...	...	83147	...
		60670006	...	...	83147	...
		60670006L	...	...	83147	...
	Models with O.E.M. Number	12738	...	...	83225	...
		47902-3	...	...	85005	89430
		47902-11	...	...	83207	89407
		47902-15	...	...	83137	...
		47902-20	...	...	85036	89405
		47902-21	...	...	85976	...
		47902-22	...	...	85916	89430
		47902-24	...	...	83137	...
		47902-26	...	...	83144	...
		47902-27	...	...	83123	89405
		47902-28	...	...	85013	89414
		47902-29	...	...	83149	...
		57241-001	...	...	83111	...
		57241-002	...	...	83109	...
		57241-004	...	...	83110	...
		57324-1	...	...	85036	89405
		57324-2	...	...	85976	...
		57324-3	...	...	85916	89430
		57324-11	...	...	85305	...
		57905-1	...	...	85976	...
		58623-1	...	...	85978	...
		59048-001	...	...	83148	...
		59057-001	...	...	83137	...
		59057-002	...	...	85036	89405
		59305-1	...	...	85979	...
		59851-1	...	...	85976	...
		59852-1	...	...	85977	...
		59852-2	...	...	85977	...
		60657-004	...	...	85072	...
		60657-007	...	...	85072	...
		60665-003	...	...	83137	...
		60665-004	...	...	85036	89405
		60665-004L	...	...	85036	89405
		60665-008	...	...	85978	...
		60665-009	...	...	85043	...
		60665-020	...	...	85919	...
		60670-001	...	...	83123	89405
		60670-004	...	...	83123	89405
		60670-009	...	...	85013	89414
		60670-011	...	...	83148	...
		60670-12	...	...	83168	...
		60670-012	...	...	83168	...
		60670-014	...	...	83166	...
		60670-019	...	...	83166	...
		60675-001	...	...	85978	...

HENDRICKSON TRUCK SUSPENSION SYSTEMS (CONT'D)

Year Ano Année	Model Modelo Modle	OEM #		Front			Rear	
				Fleetline	GasSLX		Fleetline	GasSLX
	Models with O.E.M. Number	60675-001L		...	...	O|O	85978	...
		60675-002		...	...	O|O	85979	...
		60675-002L		...	...	O|O	85979	...
		60675-007		...	...	O|O	83122	89406
		60675-009		...	...	O|O	85978	...
		60675-010		...	...	O|O	85036	89405
		60675-013		...	...	O|O	83123	89405
		60675-017		...	...	O|O	85979	...
		60680-002		...	...		83109	...
		70018		...	...	O|O	85303	89422
		70021		...	...	O|O	85303	89422
		70088		...	...	O|O	85307	...
		98583-005		...	...	O|O	83168	...
		98583-006		...	...	O|O	83148	...
		98583-016		...	...	O|O	83147	...
		98583-032		...	...	O|O	85072	...
		479023		...	...	O|O	85005	89430
		503610C2		...	...	O|O	83207	89407
		573241		...	...	O|O	85036	89405
		573242		...	...	O|O	85976	...
		573243		...	...	O|O	85916	89430
		579051		...	...	O|O	85976	...
		586231		...	...	O|O	85978	...
		593051		...	...	O|O	85979	...
		598511		...	...	O|O	85976	...
		598521		...	...		85977	...
		598522		...	...		85977	...
		654890		...	...	O|O	83207	89407
		654891		...	...	O|O	83149	...
		654894		...	...	O|O	83123	89405
		654895		...	...	O|O	83137	...
		654896		...	...	O|O	83147	...
		654897		...	...	O|O	83144	...
		654898		...	...	O|O	83123	89405
		654899		...	...	O|O	85013	89414
		654900		...	...	O|O	83149	...
		654903		...	...		83111	...
		654904		...	...		83109	...
		654905		...	...		83112	...
		659000		...	...	O|O	83148	...
		659004		...	...	O|O	83123	89405
		659048		...	...		83143	...
		659049		...	...		83142	...
		659155		...	...	O|O	83147	...
		659202		...	...	O|O	83148	...
		659292		...	...	O|O	83148	...
		665816		...	...	O|O	85072	...
		665892		...	...	O|O	85072	...
		671006		...	...	O|O	85036	89405
		671007		...	...	O|O	83137	...
		671009		...	...	O|O	85919	...
		671105		...	...	O|O	85072	...
		671603		...	...	O|O	85919	...
		671606	O|O	85955	...		...	...
		671611	O|O	85955	...		...	...

APPLICATION GUIDE - TRUCKS, TRAILERS AND BUSES

HENDRICKSON TRUCK SUSPENSION SYSTEMS (CONT'D)

Year Ano Année	Model Modelo Modle	OEM #	Front Fleetline	Front GasSLX		Rear Fleetline	Rear GasSLX
	Models with O.E.M. Number	671704	...	...	o|o	85043	...
		671764	...	...	o|o	85967	...
		671792	...	...	o|o	85965	...
		671798	...	...	o|o	85962	...
		680091	...	...	o|o	85303	89422
		680600	...	...	o|o	85305	...
		4790211	...	...	o|o	83207	89407
		4790215	...	...	o|o	83137	...
		4790220	...	...	o|o	85036	89405
		4790221	...	...	o|o	85976	...
		4790222	...	...	o|o	85916	89430
		4790224	...	...	o|o	83137	...
		4790226	...	...	o|o	83144	...
		4790227	...	...	o|o	83123	89405
		4790228	...	...	o|o	85013	89414
		4790229	...	...	o|o	83149	...
		5554596	...	...	o|o	85303	89422
		5732411	...	...	o|o	85305	...
		6067012	...	...	o|o	83168	...
		57241001	...	...		83111	...
		57241002	...	...		83109	...
		57241004	...	...		83110	...
		59048001	...	...	o|o	83148	...
		59057001	...	...	o|o	83137	...
		59057002	...	...	o|o	85036	89405
		60657004	...	...	o|o	85072	...
		60657007	...	...	o|o	85072	...
		60665003	...	...	o|o	83137	...
		60665004	...	...	o|o	85036	89405
		60665004L	...	...	o|o	85036	89405
		60665008	...	...	o|o	85978	...
		60665009	...	...	o|o	85043	...
		60665020	...	...	o|o	85919	...
		60670001	...	...	o|o	83123	89405
		60670004	...	...	o|o	83123	89405
		60670009	...	...	o|o	85013	89414
		60670011	...	...	o|o	83148	...
		60670012	...	...	o|o	83168	...
		60670014	...	...	o|o	83166	...
		60670019	...	...	o|o	83166	...
		60675001	...	...	o|o	85978	...
		60675001L	...	...	o|o	85978	...
		60675002	...	...	o|o	85979	...
		60675002L	...	...	o|o	85979	...
		60675007	...	...	o|o	83122	89406
		60675009	...	...	o|o	85978	...
		60675010	...	...	o|o	85036	89405
		60675013	...	...	o|o	83123	89405
		60675017	...	...	o|o	85979	...
		60680002	...	...		83109	...
		98583005	...	...	o|o	83168	...
		98583006	...	...	o|o	83148	...
		98583016	...	...	o|o	83147	...
		98583032	...	...	o|o	85072	...
		AE76164-3	...	...	o|o	85307	...

APPLICATION GUIDE - TRUCKS, TRAILERS AND BUSES

Year Ano Année	Model Modelo Modle	OEM #		Front			Rear	
				Fleetline	GasSLX		Fleetline	GasSLX
HENDRICKSON TRUCK SUSPENSION SYSTEMS (CONT'D)								
	Models with O.E.M. Number	AE76164-4		...	...		83225	...
		AE761643		...	...		85307	...
		AE761644		...	...		83225	...
		BE76164-2		...	...		85303	89422
		BE76164-3		...	...		85307	...
		BE76164-4		...	...		83225	...
		BE761642		...	...		85303	89422
		BE761643		...	...		85307	...
		BE761644		...	...		83225	...
	RT2 & RTE2 (400 / 520) Models Air Suspension (Note: For Ride Height of 10.41" to 12.27" with 52" & 54" Beams and 8.52" to 10.37" with 60" Beams.)	57324-6		...	...		85043	...
		573246		...	...		85043	...
PRIMAAX - SERIES								
	230 Air Suspensions	60657-003		...	...		85072	...
		60657-003L		...	...		85072	...
		60665-011		...	...		85967	...
		60657003		...	...		85072	...
		60657003L		...	...		85072	...
		60665011		...	...		85967	...
	260 Air Suspensions	60665-013		...	...		85965	...
		60665013		...	...		85965	...
	460 Air Suspensions	60657-003		...	...		85072	...
		60657-003L		...	...		85072	...
		60665-011		...	...		85967	...
		60657003		...	...		85072	...
		60657003L		...	...		85072	...
		60665011		...	...		85967	...
	520 Air Suspensions	60665-013		...	...		85965	...
		60665013		...	...		85965	...
	690 Air Suspensions	60657-003		...	...		85072	...
		60657-003L		...	...		85072	...
		60665-011		...	...		85967	...
		60657003		...	...		85072	...
		60657003L		...	...		85072	...
		60665011		...	...		85967	...
	780 Air Suspensions	60665-013		...	...		85965	...
		60665013		...	...		85965	...
	EX 232 Air Suspensions	60657-003		...	...		85072	...
		60657-003L		...	...		85072	...
		60665-011		...	...		85967	...
		60657003		...	...		85072	...
		60657003L		...	...		85072	...
		60665011		...	...		85967	...
	EX 262 Air Suspensions	60665-013		...	...		85965	...
		60665013		...	...		85965	...
	EX 462 Air Suspensions	60657-003		...	...		85072	...
		60657-003L		...	...		85072	...
		60665-011		...	...		85967	...
		60657003		...	...		85072	...
		60657003L		...	...		85072	...
		60665011		...	...		85967	...
	EX 522 Air Suspensions	60665-013		...	...		85965	...
		60665013		...	...		85965	...
	EX 692 Air Suspensions	60657-003		...	...		85072	...
		60657-003L		...	...		85072	...

Year Ano Année	Model Modelo Modle	OEM #		Front			Rear	
				Fleetline	GasSLX		Fleetline	GasSLX
HENDRICKSON TRUCK SUSPENSION SYSTEMS (CONT'D)								
PRIMAAX - SERIES (cont'd)								
	EX 692 Air Suspensions	60665-011		...	...	○|○	85967	...
		60657003		...	...	○|○	85072	...
		60657003L		...	...	○|○	85072	...
		60665011		...	...	○|○	85967	...
	EX 782 Air Suspensions	60665-013		...	...	○|○	85965	...
		60665013		...	...	○|○	85965	...
	Models with O.E.M. Number	60657-005		...	...	○|○	85087	...
		60657-005L		...	...	○|○	85087	...
		60657005		...	...	○|○	85087	...
		60657005L		...	...	○|○	85087	...
TOUGH LIFT LK SERIES								
	Dual Tire Steer Lift Axle	A-14496	○|○	646155				
HIGHWAY PRODUCT								
	Transit Bus with Air Suspension	.....	○|○	83203	89436		...	...
	Transit Bus with Leaf Spring Suspension	.....	○|○	83203	89436		...	...
		A1-6-134		...	...	○|○	83207	89407
		A1-6-135	○|○	83203	89436		...	...
		A16134		...	...	○|○	83207	89407
		A16135	○|○	83203	89436		...	...
HINO								
145								
05-10	Models with O.E.M. Number	48500-3710	○|○	83126	89430		...	...
		485003710A	○|○	83126	89430		...	...
		S4850-03710	○|○	83126	89430		...	...
155								
13-20	Models with O.E.M. Number	48511-37320	−|○	83518	...		...	...
		48511-80162	−|○	83518	...		...	...
		4851137320	−|○	83518	...		...	...
16-20	Models with O.E.M. Number	48531-37351		...	...	○|○	83519	...
		4853137351		...	...	○|○	83519	...
165								
05-10	Models with O.E.M. Number	48500-3710	○|○	83126	89430		...	...
		485003710A	○|○	83126	89430		...	...
		S4850-03710	○|○	83126	89430		...	...
185								
05-10	Models with O.E.M. Number	48500-3710	○|○	83126	89430		...	...
		48500-3720	○|○	83140	...		...	...
		485003710A	○|○	83126	89430		...	...
		S4850-03710	○|○	83126	89430		...	...
		S4850-03720	○|○	83140	...		...	...
195								
12-20	Models with Hendrickson Comfort Air Suspension (23,000 lb Capacity)	60670-018		...	...	○|○	83166	...
		60670-018L		...	...	○|○	83166	...
		60670018		...	...	○|○	83166	...
		60670018L		...	...	○|○	83166	...
12-20	Models with O.E.M. Number	48511-37320	−|○	83518	...		...	...
		48511-80162	−|○	83518	...		...	...

Year Ano Année	Model Modelo Modle	OEM #		Front			Rear	
				Fleetline	GasSLX		Fleetline	GasSLX
HINO (CONT'D)								
195 (cont'd)								
12-20	Models with O.E.M. Number	48531-37361		...	...	○|○	**83519**	...
		48531-37362		...	...	○|○	**83519**	...
		4851137320	−|○	**83518**	...		...	...
		4851180162	−|○	**83518**	...		...	...
		4853137361		...	...	○|○	**83519**	...
		4853137362		...	...	○|○	**83519**	...
238								
05-14	Models with O.E.M. Number	48500-3720	○|○	**83140**	...		...	...
		485003720	○|○	**83140**	...		...	...
		S4850-03720	○|○	**83140**	...		...	...
		S485003720	○|○	**83140**	...		...	...
258								
06-14	Models with O.E.M. Number	48500-3720	○|○	**83140**	...		...	...
		485003720	○|○	**83140**	...		...	...
		S4850-03720	○|○	**83140**	...		...	...
		S485003720	○|○	**83140**	...		...	...
06-21	Models with Hendrickson Rear Air Suspension	48530E0100		...	...	○|○	**83166**	...
		48530E0290		...	...	○|○	**83166**	...
		48530E0390		...	...	○|○	**83166**	...
		48530-E0100		...	...	○|○	**83166**	...
		48530-E0290		...	...	○|○	**83166**	...
		48530-E0390		...	...	○|○	**83166**	...
		60670-014		...	...	○|○	**83166**	...
		60670-019		...	...	○|○	**83166**	...
		60670014		...	...	○|○	**83166**	...
		60670019		...	...	○|○	**83166**	...
15-21	Models with O.E.M. Number	48500E0420	○|○	**83391**	...		...	...
		48500-E0420	○|○	**83391**	...		...	...
258ALP								
08-14	Models with Hendrickson Rear Air Suspension	48530E0100		...	...	○|○	**83166**	...
		48530E0290		...	...	○|○	**83166**	...
		48530E0390		...	...	○|○	**83166**	...
		48530-E0100		...	...	○|○	**83166**	...
		48530-E0290		...	...	○|○	**83166**	...
		48530-E0390		...	...	○|○	**83166**	...
		60670-014		...	...	○|○	**83166**	...
		60670-019		...	...	○|○	**83166**	...
		60670014		...	...	○|○	**83166**	...
		60670019		...	...	○|○	**83166**	...
258LP								
06-20	Models with Hendrickson Rear Air Suspension	48530E0100		...	...	○|○	**83166**	...
		48530E0290		...	...	○|○	**83166**	...
		48530E0390		...	...	○|○	**83166**	...
		48530-E0100		...	...	○|○	**83166**	...
		48530-E0290		...	...	○|○	**83166**	...
		48530-E0390		...	...	○|○	**83166**	...
		60670-014		...	...	○|○	**83166**	...
		60670-019		...	...	○|○	**83166**	...
		60670014		...	...	○|○	**83166**	...
		60670019		...	...	○|○	**83166**	...

Year Ano Année	Model Modelo Modle	OEM #		Front			Rear	
				Fleetline	GasSLX		Fleetline	GasSLX
HINO (CONT'D)								
258LP (cont'd)								
15-20	Models with O.E.M. Number	48500E0420	○|○	**83391**	...		...	...
		48500-E0420	○|○	**83391**	...		...	...
268								
05-14	Models with O.E.M. Number	48500-3720	○|○	**83140**	...		...	...
		485003720	○|○	**83140**	...		...	...
		S4850-03720	○|○	**83140**	...		...	...
		S485003720	○|○	**83140**	...		...	...
05-22	Models with Hendrickson Rear Air Suspension	48530E0100		...	...	○|○	**83166**	...
		48530E0290		...	...	○|○	**83166**	...
		48530E0390		...	...	○|○	**83166**	...
		48530-E0100		...	...	○|○	**83166**	...
		48530-E0290		...	...	○|○	**83166**	...
		48530-E0390		...	...	○|○	**83166**	...
		60670-014		...	...	○|○	**83166**	...
		60670-019		...	...	○|○	**83166**	...
		60670014		...	...	○|○	**83166**	...
		60670019		...	...	○|○	**83166**	...
15-22	Models with O.E.M. Number	48500E0420	○|○	**83391**	...		...	...
		48500-E0420	○|○	**83391**	...		...	...
268A								
08-14	Models with Hendrickson Rear Air Suspension	48530E0100		...	...	○|○	**83166**	...
		48530E0290		...	...	○|○	**83166**	...
		48530E0390		...	...	○|○	**83166**	...
		48530-E0100		...	...	○|○	**83166**	...
		48530-E0290		...	...	○|○	**83166**	...
		48530-E0390		...	...	○|○	**83166**	...
		60670-014		...	...	○|○	**83166**	...
		60670-019		...	...	○|○	**83166**	...
		60670014		...	...	○|○	**83166**	...
		60670019		...	...	○|○	**83166**	...
08-14	Models with O.E.M. Number	48500-3720	○|○	**83140**	...		...	...
		485003720	○|○	**83140**	...		...	...
		S4850-03720	○|○	**83140**	...		...	...
		S485003720	○|○	**83140**	...		...	...
308								
05-08	Models with O.E.M. Number	48500-3720	○|○	**83140**	...		...	...
		485003720	○|○	**83140**	...		...	...
		S4850-03720	○|○	**83140**	...		...	...
		S485003720	○|○	**83140**	...		...	...
338								
05-14	Models with O.E.M. Number	48500-3720	○|○	**83140**	...		...	...
		485003720	○|○	**83140**	...		...	...
		S4850-03720	○|○	**83140**	...		...	...
		S485003720	○|○	**83140**	...		...	...
08-21	Models with Hendrickson Rear Air Suspension	48530E0100		...	...	○|○	**83166**	...
		48530E0290		...	...	○|○	**83166**	...
		48530E0390		...	...	○|○	**83166**	...
		48530-E0100		...	...	○|○	**83166**	...
		48530-E0290		...	...	○|○	**83166**	...
		48530-E0390		...	...	○|○	**83166**	...

APPLICATION GUIDE - TRUCKS, TRAILERS AND BUSES

Year Ano Année	Model Modelo Modle	OEM #		Front			Rear	
				Fleetline	GasSLX		Fleetline	GasSLX
HINO (CONT'D)								
338 (cont'd)								
08-21	Models with Hendrickson Rear Air Suspension	60670-014		...	...	○|○	**83166**	...
		60670-019		...	...	○|○	**83166**	...
		60670014		...	...	○|○	**83166**	...
		60670019		...	...	○|○	**83166**	...
15-22	Models with O.E.M. Number	48500E0420	○|○	**83391**	...		...	...
		48500-E0420	○|○	**83391**	...		...	...
358								
08-14	Models with O.E.M. Number	48500-3720	○|○	**83140**	...		...	...
		485003720	○|○	**83140**	...		...	...
		S4850-03720	○|○	**83140**	...		...	...
		S485003720	○|○	**83140**	...		...	...
08-21	Models with Hendrickson Rear Air Suspension	48530E0100		...	...	○|○	**83166**	...
		48530E0290		...	...	○|○	**83166**	...
		48530E0390		...	...	○|○	**83166**	...
		48530-E0100		...	...	○|○	**83166**	...
		48530-E0290		...	...	○|○	**83166**	...
		48530-E0390		...	...	○|○	**83166**	...
		60670-014		...	...	○|○	**83166**	...
		60670-019		...	...	○|○	**83166**	...
		60670014		...	...	○|○	**83166**	...
		60670019		...	...	○|○	**83166**	...
15-21	Models with O.E.M. Number	48500E0420	○|○	**83391**	...		...	...
		48500-E0420	○|○	**83391**	...		...	...
FA14								
89-91	FA, FB Models Trucks with:	S4853-01910		...	...	○|○	**83216**	...
FA15								
1992	FA, FB Models Trucks with:	34802		...	...	○|○	**83216**	...
		48500-1950	–|○	**G63610**	...		...	...
		48500-2750	–|○	**G63610**	...		...	...
		48530-1910		...	...	○|○	**83216**	...
		48530-2510		...	...	○|○	**83216**	...
		66639	–|○	**G63610**	...		...	...
		S4850-01950	–|○	**G63610**	...		...	...
		S4850-02750	–|○	**G63610**	...		...	...
		S4853-01910		...	...	○|○	**83216**	...
		S4853-02510		...	...	○|○	**83216**	...
FA1415								
93-97	(FA15)	48500-1950	–|○	**G63610**	...		...	...
		48530-1910		...	...	○|○	**83216**	...
93-97	FA1415 (FA15), FB1715 (FB15)	48500-1950	–|○	**G63610**	...		...	...
		48530-1910		...	...	○|○	**83216**	...
93-97	FA, FB Models Trucks with:	34802		...	...	○|○	**83216**	...
		48500-1950	–|○	**G63610**	...		...	...
		48500-2750	–|○	**G63610**	...		...	...
		48530-1910		...	...	○|○	**83216**	...
		48530-2510		...	...	○|○	**83216**	...
		66639	–|○	**G63610**	...		...	...
		S4850-01950	–|○	**G63610**	...		...	...
		S4850-02750	–|○	**G63610**	...		...	...
		S4853-01910		...	...	○|○	**83216**	...

APPLICATION GUIDE - TRUCKS, TRAILERS AND BUSES

Year Ano Année	Model Modelo Modle	OEM #		Front			Rear	
				Fleetline	GasSLX		Fleetline	GasSLX
HINO (CONT'D)								
FA1415 (cont'd)								
93-97	FA, FB Models Trucks with:	S4853-02510		...	...	○|○	**83216**	...
FA1517								
98-04	FA, FB Models Trucks with:	34802		...	...	○|○	**83216**	...
		48500-1950	−|○	**G63610**	...		...	...
		48500-2750	−|○	**G63610**	...		...	...
		48530-1910		...	...	○|○	**83216**	...
		48530-2510		...	...	○|○	**83216**	...
		66639	−|○	**G63610**	...		...	...
		S4850-01950	−|○	**G63610**	...		...	...
		S4850-02750	−|○	**G63610**	...		...	...
		S4853-01910		...	...	○|○	**83216**	...
		S4853-02510		...	...	○|○	**83216**	...
1998	...	48530-2510		...	...	○|○	**83216**	...
1998	FA1517, FA1817, FB1817	48530-2510		...	...	○|○	**83216**	...
FB14								
89-91	FA, FB Models Trucks with:	34802		...	...	○|○	**83216**	...
		48500-1950	−|○	**G63610**	...		...	...
		48500-2750	−|○	**G63610**	...		...	...
		48530-1910		...	...	○|○	**83216**	...
		48530-2510		...	...	○|○	**83216**	...
		66639	−|○	**G63610**	...		...	...
		S4850-01950	−|○	**G63610**	...		...	...
		S4850-02750	−|○	**G63610**	...		...	...
		S4853-01910		...	...	○|○	**83216**	...
		S4853-02510		...	...	○|○	**83216**	...
FB15								
1992	FA, FB Models Trucks with:	34802		...	...	○|○	**83216**	...
		48500-1950	−|○	**G63610**	...		...	...
		48500-2750	−|○	**G63610**	...		...	...
		48530-1910		...	...	○|○	**83216**	...
		48530-2510		...	...	○|○	**83216**	...
		66639	−|○	**G63610**	...		...	...
		S4850-01950	−|○	**G63610**	...		...	...
		S4850-02750	−|○	**G63610**	...		...	...
		S4853-01910		...	...	○|○	**83216**	...
		S4853-02510		...	...	○|○	**83216**	...
FB1715								
93-97	FA1415 (FA15), FB1715 (FB15)	48500-1950	−|○	**G63610**	...		...	...
		48530-1910		...	...	○|○	**83216**	...
93-97	FA, FB Models Trucks with:	34802		...	...	○|○	**83216**	...
		48500-1950	−|○	**G63610**	...		...	...
		48500-2750	−|○	**G63610**	...		...	...
		48530-1910		...	...	○|○	**83216**	...
		48530-2510		...	...	○|○	**83216**	...
		66639	−|○	**G63610**	...		...	...
		S4850-01950	−|○	**G63610**	...		...	...
		S4850-02750	−|○	**G63610**	...		...	...
		S4853-01910		...	...	○|○	**83216**	...
		S4853-02510		...	...	○|○	**83216**	...
FB1817								
98-04	FA, FB Models Trucks with:	34802		...	...	○|○	**83216**	...

APPLICATION GUIDE - TRUCKS, TRAILERS AND BUSES

Year Ano Année	Model Modelo Modle	OEM #		Front			Rear	
				Fleetline	GasSLX		Fleetline	GasSLX
HINO (CONT'D)								
FB1817 (cont'd)								
98-04	FA, FB Models Trucks with:	48500-1950	−|O	**G63610**	...		...	...
		48500-2750	−|O	**G63610**	...		...	...
		48530-1910		...	...	O|O	**83216**	...
		48530-2510		...	...	O|O	**83216**	...
		66639	−|O	**G63610**	...		...	...
		S4850-01950	−|O	**G63610**	...		...	...
		S4850-02750	−|O	**G63610**	...		...	...
		S4853-01910		...	...	O|O	**83216**	...
		S4853-02510		...	...	O|O	**83216**	...
98-04	FE Models Trucks with:	48500-1941	O|O	**83141**	...		...	...
		S4850-01941	O|O	**83141**	...		...	...
1998	...	48530-2510		...	...	O|O	**83216**	...
1998	FA1517, FA1817, FB1817	48530-2510		...	...	O|O	**83216**	...
FD16								
86-87	Models with O.E.M. Number	48530-1880		...	...	O|O	**83215**	...
		485301880		...	...	O|O	**83215**	...
FD17								
88-92	Models with O.E.M. Number	48530-1880		...	...	O|O	**83215**	...
		485301880		...	...	O|O	**83215**	...
FD2218								
93-97	(FD5H). FE5H, FF5H	48500-1801	O|O	**83216**	...		...	...
		48530-1880		...	...	O|O	**83215**	...
FE16								
86-87	...	48500-1801	O|O	**83216**	...		...	...
FE2620								
1998	...	48530-1880		...	...	O|O	**83215**	...
		485301880		...	...	O|O	**83215**	...
FF3020								
98-02	FF Models Trucks with O.E.M. Number	48500-1941	O|O	**83141**	...		...	...
		485001941	O|O	**83141**	...		...	...
GC17								
90-91	GC17	48500-1801	O|O	**83216**	...		...	...
GC20								
1992	GC20	48500-1801	O|O	**83216**	...		...	...
L6								
2021	Models with Hendrickson Rear Air Suspension	48530E0100		...	...	O|O	**83166**	...
		48530E0290		...	...	O|O	**83166**	...
		48530E0390		...	...	O|O	**83166**	...
		48530-E0100		...	...	O|O	**83166**	...
		48530-E0290		...	...	O|O	**83166**	...
		48530-E0390		...	...	O|O	**83166**	...
		60670-014		...	...	O|O	**83166**	...
		60670-019		...	...	O|O	**83166**	...
		60670014		...	...	O|O	**83166**	...
		60670019		...	...	O|O	**83166**	...
2021	Models with O.E.M. Number	48500E0420	O|O	**83391**	...		...	...

Year Ano Année	Model Modelo Modle	OEM #		Front			Rear	
				Fleetline	GasSLX		Fleetline	GasSLX
HINO (CONT'D)								
L6 (cont'd)								
2021	Models with O.E.M. Number	48500-E0420	○|○	**83391**	...		...	...
L7								
2021	Models with Hendrickson Rear Air Suspension	48530E0100		...	...	○|○	**83166**	...
		48530E0290		...	...	○|○	**83166**	...
		48530E0390		...	...	○|○	**83166**	...
		48530-E0100		...	...	○|○	**83166**	...
		48530-E0290		...	...	○|○	**83166**	...
		48530-E0390		...	...	○|○	**83166**	...
		60670-014		...	...	○|○	**83166**	...
		60670-019		...	...	○|○	**83166**	...
		60670014		...	...	○|○	**83166**	...
		60670019		...	...	○|○	**83166**	...
2021	Models with O.E.M. Number	48500E0420	○|○	**83391**	...		...	...
		48500-E0420	○|○	**83391**	...		...	...
L8								
2021	Models with Hendrickson Rear Air Suspension	48530E0100		...	...	○|○	**83166**	...
		48530E0290		...	...	○|○	**83166**	...
		48530E0390		...	...	○|○	**83166**	...
		48530-E0100		...	...	○|○	**83166**	...
		48530-E0290		...	...	○|○	**83166**	...
		48530-E0390		...	...	○|○	**83166**	...
		60670-014		...	...	○|○	**83166**	...
		60670-019		...	...	○|○	**83166**	...
		60670014		...	...	○|○	**83166**	...
		60670019		...	...	○|○	**83166**	...
SG19								
86-91	SG19	48500-1941	○|○	**83141**	...		...	...
SG20								
1992	SG20	48500-1941	○|○	**83141**	...		...	...
SG22								
1986	SG22 Straight Truck	48500-1941	○|○	**83141**	...		...	...
SG23								
87-92	SG23 Straight Truck	48500-1941	○|○	**83141**	...		...	...
SG231								
89-92	SG231 Tractor	48500-1941	○|○	**83141**	...		...	...
SG3320								
98-02	SG Models Trucks with O.E.M. Number	48500-1941	○|○	**83141**	...		...	...
		S4850-01941	○|○	**83141**	...		...	...
93-97	SG3320 (SG4H)	48500-1941	○|○	**83141**	...		...	...
SG3323								
93-97	SG3323 (SG1H) Straight Truck	48500-1941	○|○	**83141**	...		...	...
SG5523								
93-96	SG5523 (SG1HD) Tractor	48500-1941	○|○	**83141**	...		...	...
195								
2021	...	48531-37361		...	...	○|○	**83519**	...

APPLICATION GUIDE - TRUCKS, TRAILERS AND BUSES

Year Ano Année	Model Modelo Modle	OEM #		Front			Rear	
				Fleetline	GasSLX		Fleetline	GasSLX
HINO (CONT'D)								
195 (cont'd)								
2021	...	48531-37362		...	...		83519	...
		4853137361		...	...		83519	...
		4853137362		...	...		83519	...
195 SERIES								
2021	Models with O.E.M. Number	48511-37320		83518	...		...	...
		48511-80162		83518	...		...	...
		4851137320		83518	...		...	...
		4851180162		83518	...		...	...
268, 268A SERIES								
	Models with Hendrickson Rear Air Suspension (Shock stamping #)	60670-012		...	...		83168	...
		60670012		...	...		83168	...
ADDITIONAL APPLICATIONS								
	Conventional Hino Models with Hendrickson Comfort Air Suspension	60670-020		...	...		83148	...
		60670020		...	...		83148	...
	Conventional Hino Models with Hendrickson Comfort Air Suspension (19,000 lb & 21,000 lb Capacity)	60670-013		...	...		83148	...
		60670013		...	...		83148	...
	Conventional Hino Models with Hendrickson Comfort Air Suspension (23,000 lb Capacity)	60670-018		...	...		83166	...
		60670018		...	...		83166	...
	Conventional Hino Models with Hendrickson Rear Air Suspension	60670-014		...	...		83166	...
		60670-019		...	...		83166	...
		60670014		...	...		83166	...
		60670019		...	...		83166	...
	Models with O.E.M. Number	6-031-7708-00		85308 or 89422				
		6-031-7708-01		85308 or 89422				
		6-031-7708-02		85308 or 89422				
		6-031-7708-03		85308 or 89422				
		6-071-4800-80		85308 or 89422				
		6-071-4800-81		85308 or 89422				
		48500-1120		85308 or 89422				
		48500-1140		85308 or 89422				
		48500-1340		85308 or 89422				
		48500-1610		85308 or 89422				
		48500-1700		85308 or 89422				
		48500-1730		85308 or 89422				
		48500-1800		83216	...		...	...
		48500-1940		83141	...		...	...
		48500-2240		85308 or 89422				
		48500-2280		85308 or 89422				
		48500-2292		85308 or 89422				
		48530-1190		85308 or 89422				
		48530-1460		...	...		83215	...
		48530-1531		85308 or 89422				
		48530-1770		...	...		83215	...
		48530-1800		85308 or 89422				
		48530-1812		85308 or 89422				
		48530-2000		85308 or 89422				
		485001120		85308 or 89422				
		485001140		85308 or 89422				
		485001340		85308 or 89422				
		485001610		85308 or 89422				

Year Ano Année	Model Modelo Modle	OEM #		Front			Rear	
				Fleetline	GasSLX		Fleetline	GasSLX
HINO (CONT'D)								
ADDITIONAL APPLICATIONS (cont'd)								
	Models with O.E.M. Number	485001700	O|O	85308 or 89422				
		485001730	O|O	85308 or 89422				
		485001800	O|O	83216	...		...	...
		485001940	O|O	83141	...		...	...
		485002240	O|O	85308 or 89422				
		485002280	O|O	85308 or 89422				
		485002292	O|O	85308 or 89422				
		485301190	O|O	85308 or 89422				
		485301460		...	...	O|O	83215	...
		485301531	O|O	85308 or 89422				
		485301770		...	...	O|O	83215	...
		485301800	O|O	85308 or 89422				
		485301812	O|O	85308 or 89422				
		485302000	O|O	85308 or 89422				
		6031770800	O|O	85308 or 89422				
		6031770801	O|O	85308 or 89422				
		6031770802	O|O	85308 or 89422				
		6031770803	O|O	85308 or 89422				
		6071480080	O|O	85308 or 89422				
		6071480081	O|O	85308 or 89422				
FA1517								
93-97	(FB15)	48500-1950	–|O	G63610	...		...	...
		48530-1910		...	...	O|O	83216	...
FA1817								
1998	...	48530-2510		...	...	O|O	83216	...
FA, FB SERIES								
89-96	FA14, FB14	48500-1950	–|O	G63610	...		...	...
		48530-1910		...	...	O|O	83216	...
92-96	FA15, FB15	48500-1950	–|O	G63610	...		...	...
		48530-1910		...	...	O|O	83216	...
1998	FA1517, FA1817, FB1817	.....		...	...	O|O	G63419	...
FD2218LD								
93-97	(FD5H). FE5H, FF5H	48500-1801	O|O	83216	...		...	...
		48530-1880		...	...	O|O	83215	...
		485301880		...	...	O|O	83215	...
FE SERIES								
98-04	Models Trucks with O.E.M. Number	48500-1941	O|O	83141	...		...	...
		485001941	O|O	83141	...		...	...
		S4850-01941	O|O	83141	...		...	...
		S485001941	O|O	83141	...		...	...
FF3020								
2003	FF Models Trucks with O.E.M. Number	48500-1941	O|O	83141	...		...	...
		485001941	O|O	83141	...		...	...
FF SERIES								
1998	FF3320	48530-1880		...	...	O|O	83215	...
		485301880		...	...	O|O	83215	...
L6								
22-23	L6 Models with Hendrickson Rear Air Suspension	48530E0100		...	...	O|O	83166	...

APPLICATION GUIDE - TRUCKS, TRAILERS AND BUSES

Year Ano Année	Model Modelo Modle	OEM #		Front			Rear	
				Fleetline	GasSLX		Fleetline	GasSLX
HINO (CONT'D)								
L6 (cont'd)								
22-23	L6 Models with Hendrickson Rear Air Suspension	48530E0290		...	...	O|O	**83166**	...
		48530E0390		...	...	O|O	**83166**	...
		48530-E0100		...	...	O|O	**83166**	...
		48530-E0290		...	...	O|O	**83166**	...
		48530-E0390		...	...	O|O	**83166**	...
		60670-014		...	...	O|O	**83166**	...
		60670-019		...	...	O|O	**83166**	...
		60670014		...	...	O|O	**83166**	...
		60670019		...	...	O|O	**83166**	...
22-23	Models with O.E.M. Number	48500E0420	O|O	**83391**	...		...	...
		48500-E0420	O|O	**83391**	...		...	...
L7								
22-23	L7 Models with Hendrickson Rear Air Suspension	48530E0100		...	...	O|O	**83166**	...
		48530E0290		...	...	O|O	**83166**	...
		48530E0390		...	...	O|O	**83166**	...
		48530-E0100		...	...	O|O	**83166**	...
		48530-E0290		...	...	O|O	**83166**	...
		48530-E0390		...	...	O|O	**83166**	...
		60670-014		...	...	O|O	**83166**	...
		60670-019		...	...	O|O	**83166**	...
		60670014		...	...	O|O	**83166**	...
		60670019		...	...	O|O	**83166**	...
22-23	Models with O.E.M. Number	48500E0420	O|O	**83391**	...		...	...
		48500-E0420	O|O	**83391**	...		...	...
L8								
22-23	L8 Models with Hendrickson Rear Air Suspension	48530E0100		...	...	O|O	**83166**	...
		48530E0290		...	...	O|O	**83166**	...
		48530E0390		...	...	O|O	**83166**	...
		48530-E0100		...	...	O|O	**83166**	...
		48530-E0290		...	...	O|O	**83166**	...
		48530-E0390		...	...	O|O	**83166**	...
		60670-014		...	...	O|O	**83166**	...
		60670-019		...	...	O|O	**83166**	...
		60670014		...	...	O|O	**83166**	...
		60670019		...	...	O|O	**83166**	...
	Models with O.E.M. Number	48530E0250		...	...	O|O	**83137**	...
		48530-E0250		...	...	O|O	**83137**	...
SG231								
87-88	SG231 Tractor	48500-1941	O|O	**83141**	...		...	...
SG3320								
2003	SG Models Trucks with O.E.M. Number	48500-1941	O|O	**83141**	...		...	...
		S4850-01941	O|O	**83141**	...		...	...
SG5523								
1997	SG5523 (SG1HD) Tractor	48500-1941	O|O	**83141**	...		...	...
SG SERIES								
1986	SG221 Tractor	48500-1941	O|O	**83141**	...		...	...
HOBBS TRAILERS								
	Models with O.E.M. Number	680117		...	...	O|O	**85300**	**89419**

Year Ano Année	Model Modelo Modle	OEM #		Front			Rear	
				Fleetline	GasSLX		Fleetline	GasSLX
HOLIDAY RAMBLER								
CLASS A MOTORHOMES								
00-03	Models with Roadmaster Chassis RM4C or used on Ambassador	01809923		...	...	O|O	85029	...
		01809924	O|O	83144	...		...	...
00-03	Models with Workhorse W22 Chassis with 8.1L Gas V8 used on Admiral, Endeavor Gas, Vacationer	01809925	O|O	85010	...		...	...
04-10	Models with Workhorse W20 , W22, & W24 MotorHome Chassis with O.E.M. Number	F4BE5F325HO		...	...	–|–	85124	...
04-11	Models with Workhorse W20 , W22, & W24 MotorHome Chassis with O.E.M. Number	24-153256		...	...	–|–	85124	...
		24153256		...	...	–|–	85124	...
		F4-BE5-F325-HO		...	...	–|–	85124	...
		W0005663		...	...	–|–	85124	...
98-11	Models with Workhorse W20 , W22, & W24 MotorHome Chassis with O.E.M. Number	24-153249	O|O	85125	...		...	...
		24-186629	O|O	85125	...		...	...
		24153249	O|O	85125	...		...	...
		24186629	O|O	85125	...		...	...
		F4BE5A832MO	O|O	85125	...		...	...
		F4BE5B492HO	O|O	85125	...		...	...
		F4BE5F324HO	O|O	85125	...		...	...
		F4-BE5-A832-MO	O|O	85125	...		...	...
		F4-BE5-B492-HO	O|O	85125	...		...	...
		F4-BE5-F324-HO	O|O	85125	...		...	...
		W0005662	O|O	85125	...		...	...
		W0006254	O|O	85125	...		...	...
99-20	Admiral, Endeavor Gas and Vacationer Models with Ford F53 Motorhome Chassis (16,000 lb to 22,000 lb GVW)	1C34-18045-AA	O|O	83209	89414		...	...
		1C34-18045-JA	O|O	83209	89414		...	...
		9U9Z18125A		...	...	O|O	83122	89406
		9U9Z-18124-A	O|O	83209	89414		...	...
		9U9Z-18125-A		...	...	O|O	83122	89406
		9U94-18045-AA	O|O	83209	89414		...	...
		9U94-18080-AA		...	...	O|O	83122	89406
		9U9418080AA		...	...	O|O	83122	89406
		ASH137		...	...	O|O	83122	89406
		ASH1023		...	...	O|O	83122	89406
		ASH1206		...	...	O|O	83122	89406
		ASH1230		...	...	O|O	83122	89406
		ASH25824		...	...	O|O	83122	89406
		ASH-137		...	...	O|O	83122	89406
		ASH-294	O|O	83209	89414		...	...
		ASH-1022	O|O	83209	89414		...	...
		ASH-1023		...	...	O|O	83122	89406
		ASH-1205	O|O	83209	89414		...	...
		ASH-1206		...	...	O|O	83122	89406
		ASH-1228	O|O	83209	89414		...	...
		ASH-1229	O|O	83209	89414		...	...
		ASH-1230		...	...	O|O	83122	89406
		ASH-25822	O|O	83209	89414		...	...
		ASH-25823	O|O	83209	89414		...	...
		ASH-25824		...	...	O|O	83122	89406
		AT621		...	...	O|O	83122	89406
		AT-620	O|O	83209	89414		...	...
		AT-621		...	...	O|O	83122	89406
		AT-766	O|O	83209	89414		...	...
95-99	MotorHomes with Freightliner XC Chassis (22,000 to 26,000 lb GVW)	.....	O|O	83160	...		...	...

APPLICATION GUIDE - TRUCKS, TRAILERS AND BUSES

Year Ano Année	Model Modelo Modle	OEM #		Front			Rear	
				Fleetline	GasSLX		Fleetline	GasSLX
HOLIDAY RAMBLER (CONT'D)								
CLASS A MOTORHOMES (cont'd)								
95-99	MotorHomes with Freightliner XC Chassis (22,000 to 26,000 lb GVW)	.....		...	...	o|o	85029	...
CLASS C MOTORHOMES								
99-06	Atlantis Models with Ford E450 Chassis	ASH-1136		...	...	–|o	G63623	...
		ASH-1154	–|o	G63622	...		...	...
07-19	Augusta Series MotorHomes with Ford E450 Chassis	ASH-1136		...	...	–|o	G63623	...
		ASH-1154	–|o	G63622	...		...	...
17-20	Vesta Series MotorHomes with Ford E450 Chassis	ASH-1136		...	...	–|o	G63623	...
		ASH-1154	–|o	G63622	...		...	...
18-20	Altera Series MotorHomes with Ford E450 Chassis	ASH-1136		...	...	–|o	G63623	...
		ASH-1154	–|o	G63622	...		...	...
	Models with Mor-Ryde Suspension	U0109-007		...	...	o|o	G63183	...
		U0109007		...	...	o|o	G63183	...
	Models with Neway Trailer Air Suspension	90044794		...	...	o|o	83127	...
HOLLAND - BINKLEY								
	Air Plus Integrated Air Susp. with ProPar Parallel Spindle Axles	6898		...	...	o|o	83125	...
	Holland ProPar NT2 Air Suspension	680298		...	...	o|o	85321	...
HUTCHENS SUSPENSION								
	Models with O.E.M. Number	9423-00		...	...	o|o	83203	89436
		942300		...	...	o|o	83203	89436
IC CORPORATION								
BE SCHOOL BUS								
08-15	School Buses with 7,000 lb Front Axles	3605735C1	o|o	83169	...		...	...
		3605735C2	o|o	83169	...		...	...
08-15	School Buses with O.E.M. Number	3609400C1		...	...	–|o	83317	...
		3609400C2		...	...	–|o	83317	...
CE SCHOOL BUS								
10-13	CE Model School Buses with 22,000 lb Rear Spring Suspension	501906C91		...	...	–|o	83317	...
		501906C92		...	...	–|o	83317	...
		OE13424S		...	...	–|o	83317	...
16-17	CE Model School Buses with 20,000 lb Rear Air Suspension	3601600C3		...	...	o|o	85082	...
10-18	CE Model School Buses with 20,000 lb International IROS Air Suspension	3578858C2		...	...	o|o	85926	...
		6127713C1		...	...	o|o	85926	...
13-18	CE Model School Buses with 6,000 to 8,000 lb Front Axles	3533356C3	o|o	83169	...		...	...
10-21	CE Model School Buses (71 Capacity) with 9,000 to 10,000 lb Front Suspension	3578105C1	o|o	83163	...		...	...
		3578105C2	o|o	83163	...		...	...
		6127088C1	o|o	83163	...		...	...
		OE13402S	o|o	83163	...		...	...
RE SCHOOL BUS								
03-18	RE Model School Buses (Low Profile)	537524C91		...	...	o|o	83123	89405
03-18	RE Model School Buses with 12,000 to 14,000 lb Front Axles	2200327C1	–|o	85332	...		...	...
03-18	RE Model School Buses with O.E.M. Number	472412C91	–|–	83456	89447		...	...
03-18	RE Model School Buses with O.E.M number	3604282C1	–|o	85351	...		...	...
AE SERIES SCHOOL BUS								
	AE Model School Buses with O.E.M. Number	3902993C1	o|o	83135	...		...	...
		3902993C2	o|o	83135	...		...	...
		3902993C3	o|o	83135	...		...	...
CE SCHOOL BUS								
05-09	CE Model School Buses with 22,000 lb Rear Spring Suspension	501906C91		...	...	–|o	83317	...

APPLICATION GUIDE - TRUCKS, TRAILERS AND BUSES

Year Ano Année	Model Modelo Modle	OEM #		Front			Rear	
				Fleetline	GasSLX		Fleetline	GasSLX
IC CORPORATION (CONT'D)								
CE SCHOOL BUS (cont'd)								
05-09	CE Model School Buses with 22,000 lb Rear Spring Suspension	501906C92		...	...	–|o	83317	...
		OE13424S		...	...	–|o	83317	...
06-21	CE Model School Buses (71 Capacity) with 9,000 to 10,000 lb Front Suspension	3578105C1	o|o	83163	...		...	...
		3578105C2	o|o	83163	...		...	...
		6127088C1	o|o	83163	...		...	...
		OE13402S	o|o	83163	...		...	...
RE SERIES SCHOOL BUS								
	Low-Profile models with O.E.M. Number	1660846C92		...	...	o|o	83101	...
	RE Model School Buses with O.E.M. Number	501553C91		...	...	o|o	85003	89411
		1675455C1		...	...	o|o	85003	89411
		2018987C1		...	...	o|o	85003	89411
INGERSALL MACHINE								
	700060-0 Axle Assy.	665472	o|o	665472				
	Models with O.E.M. Number	665904	o|o	665472				
INGERSOLL AXLES								
	Ingersoll part number	653511-01		...	...	o|o	85323	89436
		653511-02		...	...	o|o	85938	...
		653511-03		...	...	o|o	85045	...
		653511-04		...	...	o|o	85052	...
		65351101		...	...	o|o	85323	89436
		65351102		...	...	o|o	85938	...
		65351103		...	...	o|o	85045	...
		65351104		...	...	o|o	85052	...
INTERNATIONAL								
4300								
08-09	Models with 9,000 to 10,000 lb Front Suspension	3578105C2	o|o	83163	...		...	...
		6127088C1	o|o	83163	...		...	...
08-09	Models with International 40,000 lb Rear Air Suspension	3549099C2		...	...	o|o	85923	89458
02-13	Models with 22,000 lb Rear Spring Suspension	501906C91		...	...	–|o	83317	...
		501906C92		...	...	–|o	83317	...
		OE13424S		...	...	–|o	83317	...
02-15	Models with 12,000 lb Front axle	3533357C1	o|o	85957	...		...	...
		3533357C2	o|o	85957	...		...	...
		3533357C3	o|o	85957	...		...	...
02-20	Models with 6,000 to 8,000 lb Front Suspension	3533356C1	o|o	83135	...		...	...
		3533356C2	o|o	83135	...		...	...
02-20	Models with Hendrickson HAS - 230 or 460 Rear Air Suspension	57905-001		...	...	o|o	85976	...
		60675-003		...	...	o|o	85976	...
		60675-003L		...	...	o|o	85976	...
		3514952C1		...	...	o|o	85976	...
		57905001		...	...	o|o	85976	...
		60675003		...	...	o|o	85976	...
		60675003L		...	...	o|o	85976	...
		H60675-003		...	...	o|o	85976	...
		H60675003		...	...	o|o	85976	...
02-20	Models with O.E.M. Number	2509221C91	o|o	83054				
		2509223C91	o|o	83054				
		2509223C92	o|o	83054				
4300LP								
02-19	Models with O.E.M. Number	2509221C91	o|o	83054				

APPLICATION GUIDE - TRUCKS, TRAILERS AND BUSES

Year Ano Année	Model Modelo Modle	OEM #		Front			Rear	
				Fleetline	GasSLX		Fleetline	GasSLX
INTERNATIONAL (CONT'D)								
4300LP (cont'd)								
02-19	Models with O.E.M. Number	2509223C91	O|O	83054				
		2509223C92	O|O	83054				
2013	Models with O.E.M. Number	1660846C92	O|O	83101	...		...	...
4400								
08-09	Models with 9,000 to 10,000 lb Front Suspension	3578105C2	O|O	83163	...		...	...
		6127088C1	O|O	83163	...		...	...
08-09	Models with International 40,000 lb Rear Air Suspension	3549099C2		...	...	O|O	85923	89458
02-13	Models with 22,000 lb Rear Spring Suspension	501906C91		...	...	–|O	83317	...
		501906C92		...	...	–|O	83317	...
		OE13424S		...	...	–|O	83317	...
02-15	Models with 12,000 lb Front axle	3533357C1	O|O	85957	...		...	...
		3533357C2	O|O	85957	...		...	...
		3533357C3	O|O	85957	...		...	...
02-20	Models with 6,000 to 8,000 lb Front Suspension	3533356C1	O|O	83135	...		...	...
		3533356C2	O|O	83135	...		...	...
02-20	Models with Hendrickson HAS - 230 or 460 Rear Air Suspension	57905-001		...	...	O|O	85976	...
		60675-003		...	...	O|O	85976	...
		60675-003L		...	...	O|O	85976	...
		3514952C1		...	...	O|O	85976	...
		57905001		...	...	O|O	85976	...
		60675003		...	...	O|O	85976	...
		60675003L		...	...	O|O	85976	...
		H60675-003		...	...	O|O	85976	...
		H60675003		...	...	O|O	85976	...
02-20	Models with O.E.M. Number	2509221C91	O|O	83054				
		2509223C91	O|O	83054				
		2509223C92	O|O	83054				
4400LP								
02-19	Models with O.E.M. Number	2509221C91	O|O	83054				
		2509223C91	O|O	83054				
		2509223C92	O|O	83054				
5600I								
99-14	Models with 16,000 lb to 20,000 lb Front axle	1667520C1	O|O	85058	89431		...	...
		4070336C1	O|O	85058	89431		...	...
99-14	Models with Hendrickson HN - 402 Rear Suspension	60680-003		...	...		83112	...
		60680-003L		...	...		83112	...
		3515265C1		...	...		83112	...
		3515265C2		...	...		83112	...
		60680003		...	...		83112	...
		60680003L		...	...		83112	...
		H60680-003		...	...		83112	...
		H60680003		...	...		83112	...
5900I								
00-09	Models with 46,000 lb Neway Rear Air Suspension	2029200C91		...	...	O|O	83126	89430
		90044626		...	...	O|O	83126	89430
00-12	Models with 16,000 lb to 20,000 lb Front axle	1667520C1	O|O	85058	89431		...	...
00-17	Models with 46,000 lb Hendrickson Rear Air Suspension	60657-003		...	...	O|O	85072	...
		60657-003L		...	...	O|O	85072	...
		3626571C1		...	...	O|O	85072	...
		60657003		...	...	O|O	85072	...

APPLICATION GUIDE - TRUCKS, TRAILERS AND BUSES

Year Ano Année	Model Modelo Modle	OEM #		Front			Rear	
				Fleetline	GasSLX		Fleetline	GasSLX
INTERNATIONAL (CONT'D)								
5900I (cont'd)								
00-17	Models with 46,000 lb Hendrickson Rear Air Suspension	60657003L		...	...	○|○	**85072**	...
		H60657-003		...	...	○|○	**85072**	...
		H60657003		...	...	○|○	**85072**	...
00-17	Models with Hendrickson HMX 400/460 Haulmax with 16.5" Saddle	60680-004		...	...		**83143**	...
		60680-004L		...	...		**83143**	...
		60680004		...	...		**83143**	...
		60680004L		...	...		**83143**	...
		H60680004		...	...		**83143**	...
7300								
02-16	Models with 12,000 lb Front axle	3533357C1	○|○	**85957**	...		...	...
		3533357C2	○|○	**85957**	...		...	...
		3533357C3	○|○	**85957**	...		...	...
		3576464C1	○|○	**85957**	...		...	...
		3576464C2	○|○	**85957**	...		...	...
02-20	Models trucks with day cab or extended cabs with Link Cabmate Model IDC7345	1201-9008	○|○	**83054**				
		2509223C91	○|○	**83054**				
		12019008	○|○	**83054**				
02-20	Models with Hendrickson HAS - 230 or 460 Rear Air Suspension	57905-001		...	...	○|○	**85976**	...
		60675-003		...	...	○|○	**85976**	...
		60675-003L		...	...	○|○	**85976**	...
		3514952C1		...	...	○|○	**85976**	...
		57905001		...	...	○|○	**85976**	...
		60675003		...	...	○|○	**85976**	...
		60675003L		...	...	○|○	**85976**	...
		H60675-003		...	...	○|○	**85976**	...
		H60675003		...	...	○|○	**85976**	...
02-20	Models with Hendrickson HMX 400/460 Haulmax with 16.5" Saddle	60680-004		...	...		**83143**	...
		60680-004L		...	...		**83143**	...
		60680004		...	...		**83143**	...
		60680004L		...	...		**83143**	...
		H60680004		...	...		**83143**	...
7400								
02-16	Models with 12,000 lb Front axle	3533357C1	○|○	**85957**	...		...	...
		3533357C2	○|○	**85957**	...		...	...
		3533357C3	○|○	**85957**	...		...	...
		3576464C1	○|○	**85957**	...		...	...
		3576464C2	○|○	**85957**	...		...	...
02-20	Models trucks with day cab or extended cabs with Link Cabmate Model IDC7345	1201-9008	○|○	**83054**				
		2509223C91	○|○	**83054**				
		12019008	○|○	**83054**				
02-20	Models with Hendrickson HAS - 230 or 460 Rear Air Suspension	57905-001		...	...	○|○	**85976**	...
		60675-003		...	...	○|○	**85976**	...
		60675-003L		...	...	○|○	**85976**	...
		3514952C1		...	...	○|○	**85976**	...
		57905001		...	...	○|○	**85976**	...
		60675003		...	...	○|○	**85976**	...
		60675003L		...	...	○|○	**85976**	...
		H60675-003		...	...	○|○	**85976**	...
		H60675003		...	...	○|○	**85976**	...
02-20	Models with Hendrickson HMX 400/460 Haulmax with 16.5" Saddle	60680-004		...	...		**83143**	...
		60680-004L		...	...		**83143**	...

APPLICATION GUIDE - TRUCKS, TRAILERS AND BUSES

Year Ano Année	Model Modelo Modle	OEM #		Front			Rear	
				Fleetline	GasSLX		Fleetline	GasSLX
INTERNATIONAL (CONT'D)								
7400 (cont'd)								
02-20	Models with Hendrickson HMX 400/460 Haulmax with 16.5" Saddle	60680004		...	...		83143	...
		60680004L		...	...		83143	...
		H60680004		...	...		83143	...
02-20	Models with O.E.M. Number	3885832C1	o|o	83135	...		...	...
		3885832C2	o|o	83135	...		...	...
7500								
02-16	Models with 12,000 lb Front axle	3533357C1	o|o	85957	...		...	...
		3533357C2	o|o	85957	...		...	...
		3533357C3	o|o	85957	...		...	...
		3576464C1	o|o	85957	...		...	...
		3576464C2	o|o	85957	...		...	...
02-20	Models trucks with day cab or extended cabs with Link Cabmate Model IDC7345	1201-9008	o|o	83054				
		2509223C91	o|o	83054				
		12019008	o|o	83054				
02-20	Models with Hendrickson HAS - 230 or 460 Rear Air Suspension	57905-001		...	...	o|o	85976	...
		60675-003		...	...	o|o	85976	...
		60675-003L		...	...	o|o	85976	...
		3514952C1		...	...	o|o	85976	...
		57905001		...	...	o|o	85976	...
		60675003		...	...	o|o	85976	...
		60675003L		...	...	o|o	85976	...
		H60675-003		...	...	o|o	85976	...
		H60675003		...	...	o|o	85976	...
02-20	Models with Hendrickson HMX 400/460 Haulmax with 16.5" Saddle	60680-004		...	...		83143	...
		60680-004L		...	...		83143	...
		60680004		...	...		83143	...
		60680004L		...	...		83143	...
		H60680004		...	...		83143	...
7600								
03-07	Models with 12,000 lb Front axle	3533357C1	o|o	85957	...		...	...
		3533357C2	o|o	85957	...		...	...
		3533357C3	o|o	85957	...		...	...
		3576464C1	o|o	85957	...		...	...
		3576464C2	o|o	85957	...		...	...
03-07	Models with Hendrickson HAS - 230 or 460 Rear Air Suspension	57905-001		...	...	o|o	85976	...
		60675-003		...	...	o|o	85976	...
		60675-003L		...	...	o|o	85976	...
		3514952C1		...	...	o|o	85976	...
		57905001		...	...	o|o	85976	...
		60675003		...	...	o|o	85976	...
		60675003L		...	...	o|o	85976	...
		H60675-003		...	...	o|o	85976	...
		H60675003		...	...	o|o	85976	...
03-07	Models with Hendrickson HMX 400/460 Haulmax with 16.5" Saddle	60680-004		...	...		83143	...
		60680-004L		...	...		83143	...
		60680004		...	...		83143	...
		60680004L		...	...		83143	...
		H60680004		...	...		83143	...
09-16	Models with 12,000 lb Front axle	3533357C1	o|o	85957	...		...	...
		3533357C2	o|o	85957	...		...	...
		3533357C3	o|o	85957	...		...	...

Year Ano Année	Model Modelo Modle	OEM #		Front			Rear	
				Fleetline	GasSLX		Fleetline	GasSLX
INTERNATIONAL (CONT'D)								
7600 (cont'd)								
09-16	Models with 12,000 lb Front axle	3576464C1	○|○	**85957**	...		...	...
		3576464C2	○|○	**85957**	...		...	...
09-17	Models with Hendrickson HAS - 230 or 460 Rear Air Suspension	57905-001		...	...	○|○	**85976**	...
		60675-003		...	...	○|○	**85976**	...
		60675-003L		...	...	○|○	**85976**	...
		3514952C1		...	...	○|○	**85976**	...
		57905001		...	...	○|○	**85976**	...
		60675003		...	...	○|○	**85976**	...
		60675003L		...	...	○|○	**85976**	...
		H60675-003		...	...	○|○	**85976**	...
		H60675003		...	...	○|○	**85976**	...
09-17	Models with Hendrickson HMX 400/460 Haulmax with 16.5" Saddle	60680-004		...	...		**83143**	...
		60680-004L		...	...		**83143**	...
		60680004		...	...		**83143**	...
		60680004L		...	...		**83143**	...
		H60680004		...	...		**83143**	...
7700								
05-07	Models with Hendrickson HAS - 230 or 460 Rear Air Suspension	57905-001		...	...	○|○	**85976**	...
		60675-003		...	...	○|○	**85976**	...
		60675-003L		...	...	○|○	**85976**	...
		3514952C1		...	...	○|○	**85976**	...
		57905001		...	...	○|○	**85976**	...
		60675003		...	...	○|○	**85976**	...
		60675003L		...	...	○|○	**85976**	...
		H60675-003		...	...	○|○	**85976**	...
		H60675003		...	...	○|○	**85976**	...
05-07	Models with Hendrickson HMX 400/460 Haulmax with 16.5" Saddle	60680-004		...	...		**83143**	...
		60680-004L		...	...		**83143**	...
		60680004		...	...		**83143**	...
		60680004L		...	...		**83143**	...
		H60680004		...	...		**83143**	...
8500								
02-07	Models with 10,000 to 14,000 lb Front axle	3533357C1	○|○	**85957**	...		...	...
		3533357C2	○|○	**85957**	...		...	...
		3533357C3	○|○	**85957**	...		...	...
		3588209C1	○|○	**85957**	...		...	...
		3588209C2	○|○	**85957**	...		...	...
02-07	Models with International 40,000 lb Rear Air Suspension	3549099C1		...	...	○|○	**85923**	**89458**
		3549099C2		...	...	○|○	**85923**	**89458**
		3549099C3		...	...	○|○	**85923**	**89458**
02-07	Model trucks with day cab or extended cabs with Link Cabmate Model IDC85	1201-9008	○|○	**83054**				
		2509223C91	○|○	**83054**				
		12019008	○|○	**83054**				
8500 TRANSTAR								
08-09	Models Tractors with 36" Sleepers	2509222C91	○|○	**83053**				
08-09	Models with International 40,000 lb Rear Air Suspension	3549099C1		...	...	○|○	**85923**	**89458**
		3549099C2		...	...	○|○	**85923**	**89458**
		3549099C3		...	...	○|○	**85923**	**89458**
08-11	Models with 10,000 to 14,000 lb Front axle	3533357C1	○|○	**85957**	...		...	...
		3533357C2	○|○	**85957**	...		...	...
		3533357C3	○|○	**85957**	...		...	...

INTERNATIONAL (CONT'D)

8500 TRANSTAR (cont'd)

Year / Ano / Année	Model / Modelo / Modle	OEM #		Front			Rear	
				Fleetline	GasSLX		Fleetline	GasSLX
08-11	Models with 10,000 to 14,000 lb Front axle	3588209C1		85957	...		...	...
		3588209C2		85957	...		...	...
08-11	Model trucks with day cab or extended cabs with Link Cabmate Model IDC85	1201-9008		83054				
		2509223C91		83054				
		12019008		83054				
2009	Models Tractors with 36" Sleepers	1201-9011		83053				
		12019011		83053				

8600 SBA

03-07	Models with O.E.M. Number	1201-9008		83054				
		2509223C91		83054				
		12019008		83054				

8600 TRANSTAR

08-09	Models Tractors with 36" Sleepers	2509222C91		83053				
08-09	Models with International 40,000 lb Rear Air Suspension	3549099C1		...	...		85923	89458
		3549099C2		...	...		85923	89458
		3549099C3		...	...		85923	89458
08-11	Models with 10,000 to 14,000 lb Front axle	3533357C1		85957	...		...	...
		3533357C2		85957	...		...	...
		3533357C3		85957	...		...	...
		3588209C1		85957	...		...	...
		3588209C2		85957	...		...	...
14-17	Models with O.E.M. Number	6127086C1		85637	...		...	...
08-18	Models with O.E.M. Number	1201-9008		83054				
		2509223C91		83054				
		12019008		83054				
12-18	Models with O.E.M. Number	2595314C1		83062				
		2600491C91		83062				
2008	Models Tractors with 36" Sleepers	1201-9011		83053				
		12019011		83053				

9200I SBA

00-09	Models with 12,000 lb Front Axle	3581107C1		85924	89457		...	...
		3581107C2		85924	89457		...	...
		3581107C3		85924	89457		...	...
		3584535C3		85924	89457		...	...
		6127705C1		85924	89457		...	...
04-09	All models with 40,000 lb Rear Air Suspension	3586883C1		...	...		85931	89458

9200 SBA

2000	Models with 12,000 lb Front Axle	3581107C1		85924	89457		...	...
		3581107C2		85924	89457		...	...
		3581107C3		85924	89457		...	...
		3584535C3		85924	89457		...	...
		6127705C1		85924	89457		...	...

9300

2000	Models with 12,000 lb Front Axle	3581107C1		85924	89457		...	...
		3581107C2		85924	89457		...	...
		3581107C3		85924	89457		...	...
		3584535C3		85924	89457		...	...

9400

2000	Models with 12,000 lb Front Axle	3581107C1		85924	89457		...	...

INTERNATIONAL (CONT'D)

9400 (cont'd)

Year Ano Année	Model Modelo Modle	OEM #		Front Fleetline	Front GasSLX		Rear Fleetline	Rear GasSLX
2000	Models with 12,000 lb Front Axle	3581107C2	O|O	85924	89457		...	...
		3581107C3	O|O	85924	89457		...	...
		3584535C3	O|O	85924	89457		...	...

9400I SBA

00-09	Models with 12,000 lb Front Axle	3581107C1	O|O	85924	89457		...	...
		3581107C2	O|O	85924	89457		...	...
		3581107C3	O|O	85924	89457		...	...
		3584535C3	O|O	85924	89457		...	...
04-09	All models with 40,000 lb Rear Air Suspension	3586883C1		...	...	O|O	85931	89458

9700

89-96	Cabovers with 89" & 110" cabs with Link Cabmate Model NAV9876	1202-0054	O|O	83021				
		12020054	O|O	83021				
89-96	Models with 89" or 110" cabs with Link Cabmate Models IH9789 or IH97110	1202-0032	O|O	83016				
		12020032	O|O	83016				

9800 SBA

96-99	Cabovers with 89" & 110" cabs with Link Cabmate Model NAV9876	1202-0054	O|O	83021				
		12020054	O|O	83021				

9900I

04-09	All models with 40,000 lb Rear Air Suspension	3586883C1		...	...	O|O	85931	89458
04-09	Models with 12,000 lb Front Axle	3584535C3	O|O	85924	89457		...	...
14-16	Models with Sleeper Cab and 14,000 to 16,000 lb Taperleaf Front Spring Suspension	3977759C2	O|O	85639	...		...	...
00-18	Models with Hendrickson HAS - 230 or 460 Rear Air Suspension	57905-001		...	...	O|O	85976	...
		60675-003		...	...	O|O	85976	...
		60675-003L		...	...	O|O	85976	...
		3514952C1		...	...	O|O	85976	...
		57905001		...	...	O|O	85976	...
		60675003		...	...	O|O	85976	...
		60675003L		...	...	O|O	85976	...
		H60675-003		...	...	O|O	85976	...
		H60675003		...	...	O|O	85976	...
13-18	Models with 12,000 lb Front axle	3810581C3	O|O	85995	...		...	...
		3810581C4	O|O	85995	...		...	...

9900I SFA

00-03	Models with Hendrickson HAS - 230 or 460 Rear Air Suspension	60675-003		...	...	O|O	85976	...
		60675-003L		...	...	O|O	85976	...
		3514952C1		...	...	O|O	85976	...
		60675003		...	...	O|O	85976	...
		60675003L		...	...	O|O	85976	...
		H60675-003		...	...	O|O	85976	...
		H60675003		...	...	O|O	85976	...

9900IX

00-09	Models with Hendrickson HAS - 230 or 460 Rear Air Suspension	57905-001		...	...	O|O	85976	...
		60675-003		...	...	O|O	85976	...
		60675-003L		...	...	O|O	85976	...
		3514952C1		...	...	O|O	85976	...
		57905001		...	...	O|O	85976	...
		60675003		...	...	O|O	85976	...
		60675003L		...	...	O|O	85976	...

APPLICATION GUIDE - TRUCKS, TRAILERS AND BUSES

Year Ano Année	Model Modelo Modle	OEM #		Front			Rear	
				Fleetline	GasSLX		Fleetline	GasSLX

INTERNATIONAL (CONT'D)

9900IX (cont'd)

00-09	Models with Hendrickson HAS - 230 or 460 Rear Air Suspension	H60675-003		...	...	O|O	85976	...
		H60675003		...	...	O|O	85976	...
04-09	All models with 40,000 lb Rear Air Suspension	3586883C1		...	...	O|O	85931	89458
04-09	Models with 12,000 lb Front Axle	3584535C3	O|O	85924	89457		...	...

9900IX SFA

01-03	Models with Hendrickson HAS - 230 or 460 Rear Air Suspension	60675-003		...	...	O|O	85976	...
		60675-003L		...	...	O|O	85976	...
		3514952C1		...	...	O|O	85976	...
		60675003		...	...	O|O	85976	...
		60675003L		...	...	O|O	85976	...
		H60675-003		...	...	O|O	85976	...
		H60675003		...	...	O|O	85976	...

CO9670

81-88	Cabovers with 89" & 110" cabs with Link Cabmate Model NAV9876	1202-0054	O|O	83021				
		12020054	O|O	83021				
81-88	Models with 89" or 110" cabs with Link Cabmate Models IH967-A or IH97110	1202-0032	O|O	83016				
		12020032	O|O	83016				

COF9670

81-88	Models with 89" or 110" cabs with Link Cabmate Models IH967-A or IH97110	1202-0032	O|O	83016				
		12020032	O|O	83016				

CV515

19-22	Models with 4 x 4 Rear	4109458C2		...	...		83243	...
19-22	Models with 11K, 13.5K or 15.5K VARI-RATE Rear Suspension	4206863C1		...	...		83398	...
		4208946C1		...	...		83398	...
19-22	Models with IROS Rear	4214011C2		...	...		85670	...
19-22	Models with Taperleaf Front	4089293C1		83397	...		...	...
		4109582C1		83397	...		...	...
		4109583C1		83397	...		...	...
		4207304C1		83397	...		...	...

DURASTAR

16-17	Models with Vari-Rate Rear Spring Suspension	6127700C1		...	...	-|O	83395	...
15-19	Models with 9,000 to 10,000 lb Front Suspension	3578105C1	O|O	83163	...		...	...
		3578105C2	O|O	83163	...		...	...
		6127088C1	O|O	83163	...		...	...
		OE13402S	O|O	83163	...		...	...
16-19	Models with 20,000 lb International IROS Air Suspension	6127713C1		...	...	O|O	85926	...
15-20	Models with 6,000 to 8,000 lb Front Suspension	3533356C3	O|O	83169	...		...	...
		6127688C1	O|O	83169	...		...	...
15-20	Models with Hendrickson HAS - 230 or 460 Rear Air Suspension	57905-001		...	...	O|O	85976	...
		60675-003		...	...	O|O	85976	...
		60675-003L		...	...	O|O	85976	...
		3514952C1		...	...	O|O	85976	...
		57905001		...	...	O|O	85976	...
		60675003		...	...	O|O	85976	...
		60675003L		...	...	O|O	85976	...
		H60675-003		...	...	O|O	85976	...
		H60675003		...	...	O|O	85976	...
15-20	Models with O.E.M. Number	2509221C91	O|O	83054				
		2509223C91	O|O	83054				
		2509223C92	O|O	83054				

APPLICATION GUIDE - TRUCKS, TRAILERS AND BUSES

Year Ano Année	Model Modelo Modle	OEM #		Front			Rear	
				Fleetline	GasSLX		Fleetline	GasSLX
INTERNATIONAL (CONT'D)								
DURASTAR (cont'd)								
16-20	Models with 10,500 or 13,500 lb Vari-Rate Rear Spring Suspension	3586902C2		...	...	O|O	**83364**	...
		3586902C3		...	...	O|O	**83364**	...
		6127087C1		...	...	O|O	**83364**	...
16-20	Models with 11,000 lb to 14,000 lb Front axle	6127714C1	O|O	**85928**	...		...	...
2013	Models with 6,000 to 8,000 lb Front Suspension	3533356C3	O|O	**83169**	...		...	...
		6127688C1	O|O	**83169**	...		...	...
2013	Models with 9,000 to 10,000 lb Front Suspension	3578105C1	O|O	**83163**	...		...	...
		3578105C2	O|O	**83163**	...		...	...
		6127088C1	O|O	**83163**	...		...	...
		OE13402S	O|O	**83163**	...		...	...
2013	Models with 12,000 lb Front axle	3533357C1	O|O	**85957**	...		...	...
		3533357C2	O|O	**85957**	...		...	...
		3533357C3	O|O	**85957**	...		...	...
2013	Models with 22,000 lb Rear Spring Suspension	501906C91		...	...	–|O	**83317**	...
		501906C92		...	...	–|O	**83317**	...
		OE13424S		...	...	–|O	**83317**	...
2013	Models with Hendrickson HAS - 230 or 460 Rear Air Suspension	57905-001		...	...	O|O	**85976**	...
		60675-003		...	...	O|O	**85976**	...
		60675-003L		...	...	O|O	**85976**	...
		3514952C1		...	...	O|O	**85976**	...
		57905001		...	...	O|O	**85976**	...
		60675003		...	...	O|O	**85976**	...
		60675003L		...	...	O|O	**85976**	...
		H60675-003		...	...	O|O	**85976**	...
		H60675003		...	...	O|O	**85976**	...
2013	Models with O.E.M. Number	2509221C91	O|O	**83054**				
		2509223C91	O|O	**83054**				
		2509223C92	O|O	**83054**				
2015	Models with 12,000 lb Front axle	3533357C1	O|O	**85957**	...		...	...
		3533357C2	O|O	**85957**	...		...	...
		3533357C3	O|O	**85957**	...		...	...
HV607								
19-20	Models with 16,000 lb to 23,000 lb Parabolic Taperleaf Springs	3576464C2	O|O	**85957**	...		...	...
19-21	Models with 18,000 to 20,000 lb (Set Forward) Front Axle	3868265C1	O|O	**85995**	...		...	...
19-22	Models with Hendrickson HMX 400/460 Haulmax with 16.5" Saddle	60680-004		...	...		**83143**	...
		60680-004L		...	...		**83143**	...
		60680004		...	...		**83143**	...
		60680004L		...	...		**83143**	...
19-22	Models with Hendrickson HMX 400/460 Haulmax with 17.5" & 18.5" Saddle	60680-005		...	...		**83142**	...
		60680-005L		...	...		**83142**	...
		60680005		...	...		**83142**	...
		60680005L		...	...		**83142**	...
		HDR60680-005		...	...		**83142**	...
		HDR60680005		...	...		**83142**	...
19-22	Models with Hendrickson Primaax 230/460 Air Suspension with 9" Ride Height	60657-003		...	...	O|O	**85072**	...
		60657-003L		...	...	O|O	**85072**	...
		60657003		...	...	O|O	**85072**	...
		60657003L		...	...	O|O	**85072**	...
		H60657003		...	...	O|O	**85072**	...
19-22	Models with O.E.M. Number	2509223C91	O|O	**83054**				
HV613								
19-20	Models with 16,000 lb to 23,000 lb Parabolic Taperleaf Springs	3576464C2	O|O	**85957**	...		...	...

Year Ano Année	Model Modelo Modle	OEM #		Front			Rear	
				Fleetline	GasSLX		Fleetline	GasSLX
INTERNATIONAL (CONT'D)								
HV613 (cont'd)								
19-21	Models with 18,000 to 20,000 lb (Set Forward) Front Axle	3868265C1	O|O	**85995**	...		...	...
19-22	Models with Hendrickson HMX 400/460 Haulmax with 16.5" Saddle	60680-004		...	...		**83143**	...
		60680-004L		...	...		**83143**	...
		60680004		...	...		**83143**	...
		60680004L		...	...		**83143**	...
19-22	Models with Hendrickson HMX 400/460 Haulmax with 17.5" & 18.5" Saddle	60680-005		...	...		**83142**	...
		60680-005L		...	...		**83142**	...
		60680005		...	...		**83142**	...
		60680005L		...	...		**83142**	...
		HDR60680-005		...	...		**83142**	...
		HDR60680005		...	...		**83142**	...
19-22	Models with Hendrickson Primaax 230/460 Air Suspension with 9" Ride Height	60657-003		...	...	O|O	**85072**	...
		60657-003L		...	...	O|O	**85072**	...
		60657003		...	...	O|O	**85072**	...
		60657003L		...	...	O|O	**85072**	...
		H60657003		...	...	O|O	**85072**	...
HX515								
17-22	Models with Hendrickson HAS - 230 or 460 Rear Air Suspension	60675-003		...	...	O|O	**85976**	...
		60675-003L		...	...	O|O	**85976**	...
		3514952C1		...	...	O|O	**85976**	...
		60675003		...	...	O|O	**85976**	...
		60675003L		...	...	O|O	**85976**	...
		H60675-003		...	...	O|O	**85976**	...
		H60675003		...	...	O|O	**85976**	...
17-22	Models with Hendrickson HMX 400/460 Haulmax with 16.5" Saddle	60680-004		...	...		**83143**	...
		60680-004L		...	...		**83143**	...
		60680004		...	...		**83143**	...
		60680004L		...	...		**83143**	...
		H60680004		...	...		**83143**	...
17-22	Models with Hendrickson HMX 400/460 Haulmax with 17.5" & 18.5" Saddle	60680-005		...	...		**83142**	...
		60680-005L		...	...		**83142**	...
		60680005		...	...		**83142**	...
		60680005L		...	...		**83142**	...
		HDR60680-005		...	...		**83142**	...
		HDR60680005		...	...		**83142**	...
17-22	Models with Hendrickson Primaax 230/460 Air Suspension with 9" Ride Height	60657-003		...	...	O|O	**85072**	...
		60657-003L		...	...	O|O	**85072**	...
		60657003		...	...	O|O	**85072**	...
		60657003L		...	...	O|O	**85072**	...
		H60657003		...	...	O|O	**85072**	...
17-22	Models with Hendrickson Primaax 520 Rear Air Suspension (10" Ride Height-Drum Brakes only)	60665-013		...	...	O|O	**85965**	...
		60665013		...	...	O|O	**85965**	...
		H60665013		...	...	O|O	**85965**	...
HX520								
18-20	Sleeper Cab Models with O.E.M. Number	4055574C2	O|O	**83907**				
18-22	Models with Hendrickson HMX 400/460 Haulmax with 16.5" Saddle	60680-004		...	...		**83143**	...
		60680-004L		...	...		**83143**	...
		60680004		...	...		**83143**	...
		60680004L		...	...		**83143**	...
		H60680004		...	...		**83143**	...
18-22	Models with Hendrickson HMX 400/460 Haulmax with 17.5" & 18.5" Saddle	60680-005		...	...		**83142**	...

Year Ano Année	Model Modelo Modle	OEM #		Front			Rear	
				Fleetline	GasSLX		Fleetline	GasSLX
INTERNATIONAL (CONT'D)								
HX520 (cont'd)								
18-22	Models with Hendrickson HMX 400/460 Haulmax with 17.5" & 18.5" Saddle	60680-005L		...	...		83142	...
		60680005		...	...		83142	...
		60680005L		...	...		83142	...
		HDR60680-005		...	...		83142	...
		HDR60680005		...	...		83142	...
18-22	Models with Hendrickson Primaax 520 Rear Air Suspension (10" Ride Height-Drum Brakes only)	60665-013		...	...	○|○	85965	...
		60665013		...	...	○|○	85965	...
		H60665013		...	...	○|○	85965	...
18-23	Day Cab Models with O.E.M. Number	4060267C4	○|○	83909				
18-23	Models with Hendrickson HAS - 230 or 460 Rear Air Suspension	60675-003		...	...	○|○	85976	...
		60675-003L		...	...	○|○	85976	...
		3514952C1		...	...	○|○	85976	...
		60675003		...	...	○|○	85976	...
		60675003L		...	...	○|○	85976	...
		H60675-003		...	...	○|○	85976	...
		H60675003		...	...	○|○	85976	...
18-23	Models with Hendrickson Primaax 230/460 Air Suspension with 9" Ride Height	60657-003		...	...	○|○	85072	...
		60657-003L		...	...	○|○	85072	...
		60657003		...	...	○|○	85072	...
		60657003L		...	...	○|○	85072	...
		H60657003		...	...	○|○	85072	...
HX615								
17-22	Models with Hendrickson HAS - 230 or 460 Rear Air Suspension	60675-003		...	...	○|○	85976	...
		60675-003L		...	...	○|○	85976	...
		3514952C1		...	...	○|○	85976	...
		60675003		...	...	○|○	85976	...
		60675003L		...	...	○|○	85976	...
		H60675-003		...	...	○|○	85976	...
		H60675003		...	...	○|○	85976	...
17-22	Models with Hendrickson HMX 400/460 Haulmax with 16.5" Saddle	60680-004		...	...		83143	...
		60680-004L		...	...		83143	...
		60680004		...	...		83143	...
		60680004L		...	...		83143	...
		H60680004		...	...		83143	...
17-22	Models with Hendrickson HMX 400/460 Haulmax with 17.5" & 18.5" Saddle	60680-005		...	...		83142	...
		60680-005L		...	...		83142	...
		60680005		...	...		83142	...
		60680005L		...	...		83142	...
		HDR60680-005		...	...		83142	...
		HDR60680005		...	...		83142	...
17-22	Models with Hendrickson Primaax 230/460 Air Suspension with 9" Ride Height	60657-003		...	...	○|○	85072	...
		60657-003L		...	...	○|○	85072	...
		60657003		...	...	○|○	85072	...
		60657003L		...	...	○|○	85072	...
		H60657003		...	...	○|○	85072	...
17-22	Models with Hendrickson Primaax 520 Rear Air Suspension (10" Ride Height-Drum Brakes only)	60665-013		...	...	○|○	85965	...
		60665013		...	...	○|○	85965	...
		H60665013		...	...	○|○	85965	...
HX620								
17-20	Sleeper Cab Models with O.E.M. Number	4055574C2	○|○	83907				

Year Ano Année	Model Modelo Modle	OEM #		Front			Rear	
				Fleetline	GasSLX		Fleetline	GasSLX
INTERNATIONAL (CONT'D)								
HX620 (cont'd)								
17-22	Models with Hendrickson HAS - 230 or 460 Rear Air Suspension	60675-003		...	...	O|O	**85976**	...
		60675-003L		...	...	O|O	**85976**	...
		3514952C1		...	...	O|O	**85976**	...
		60675003		...	...	O|O	**85976**	...
		60675003L		...	...	O|O	**85976**	...
		H60675-003		...	...	O|O	**85976**	...
		H60675003		...	...	O|O	**85976**	...
17-22	Models with Hendrickson HMX 400/460 Haulmax with 16.5" Saddle	60680-004		...	...		**83143**	...
		60680-004L		...	...		**83143**	...
		60680004		...	...		**83143**	...
		60680004L		...	...		**83143**	...
		H60680004		...	...		**83143**	...
17-22	Models with Hendrickson HMX 400/460 Haulmax with 17.5" & 18.5" Saddle	60680-005		...	...		**83142**	...
		60680-005L		...	...		**83142**	...
		60680005		...	...		**83142**	...
		60680005L		...	...		**83142**	...
		HDR60680-005		...	...		**83142**	...
		HDR60680005		...	...		**83142**	...
17-22	Models with Hendrickson Primaax 520 Rear Air Suspension (10" Ride Height- Drum Brakes only)	60665-013		...	...	O|O	**85965**	...
		60665013		...	...	O|O	**85965**	...
		H60665013		...	...	O|O	**85965**	...
17-23	Day Cab Models with O.E.M. Number	4060267C4	O|O	**83909**				
17-23	Models with Hendrickson Primaax 230/460 Air Suspension with 9" Ride Height	60657-003		...	...	O|O	**85072**	...
		60657-003L		...	...	O|O	**85072**	...
		60657003		...	...	O|O	**85072**	...
		60657003L		...	...	O|O	**85072**	...
		H60657003		...	...	O|O	**85072**	...
LONESTAR								
09-15	All models with 40,000 lb Rear Air Suspension	3620395C1		...	...	O|O	**85931**	**89458**
12-16	Models with International 40,000 lb Rear Air Suspension (52" Spacing- Heavy Duty Rear)	3688614C1		...	...	O|O	**85923**	**89458**
		3688616C1		...	...	O|O	**85923**	**89458**
09-18	Models with 12,350 lb Front Mono Leaf Spring Suspension	3813341C1	O|O	**85963**	...		...	...
		3813341C2	O|O	**85963**	...		...	...
		3813341C3	O|O	**85963**	...		...	...
		3813341C4	O|O	**85963**	...		...	...
17-19	Models with O.E.M. Number	4069426C1		...	...	O|O	**85642**	...
		4069434C1		...	...	O|O	**85642**	...
09-20	Sleeper Cab models with 14,000 lb Parabolic Taperleaf Front Spring	3813340C1	O|O	**85964**	...		...	...
		3813340C2	O|O	**85964**	...		...	...
		3813340C3	O|O	**85964**	...		...	...
		3813340C4	O|O	**85964**	...		...	...
13-20	Models with O.E.M. Number	3810581C3	O|O	**85995**	...		...	...
		3810581C4	O|O	**85995**	...		...	...
09-22	Models with Hendrickson HAS - 230 or 460 Rear Air Suspension	57905-001		...	...	O|O	**85976**	...
		60675-003		...	...	O|O	**85976**	...
		60675-003L		...	...	O|O	**85976**	...
		3514952C1		...	...	O|O	**85976**	...
		57905001		...	...	O|O	**85976**	...
		60675003		...	...	O|O	**85976**	...
		60675003L		...	...	O|O	**85976**	...
		H60675-003		...	...	O|O	**85976**	...
		H60675003		...	...	O|O	**85976**	...

APPLICATION GUIDE - TRUCKS, TRAILERS AND BUSES

Year Ano Année	Model Modelo Modle	OEM #		Front			Rear	
				Fleetline	GasSLX		Fleetline	GasSLX
INTERNATIONAL (CONT'D)								
LONESTAR (cont'd)								
09-22	Models with O.E.M. Number	2595314C1		**83062**				
		2600491C91		**83062**				
17-23	Models with International 40,000 lb Rear Air Suspension (52" Spacing- Heavy Duty Rear)	4069435C1		...	...	○|○	**85642**	...
17-23	Sleeper Cab Models with O.E.M. Number	4055574C2	○|○	**83907**				
LT								
2020	DayCab Models with O.E.M. Number	2595314C1		**83062**				
2020	LT-625 Models with 12,000 lb - 13,200 lb Mono-Leaf Spring Suspension	4050443C2	○|○	**85994**	...		...	...
2020	Models with Hendrickson HTB 400LT Rear Air Suspension	60657-010		...	...	○|○	**85102**	...
		3684524C1		...	...	○|○	**85102**	...
		60657010		...	...	○|○	**85102**	...
		H60657-010		...	...	○|○	**85102**	...
		H60657010		...	...	○|○	**85102**	...
2020	Sleeper Cab Models with O.E.M. Number	4055574C2	○|○	**83907**				
LT625								
17-20	Sleeper Cab Models with O.E.M. Number	4055574C2	○|○	**83907**				
17-22	LT-625 Models with 12,000 lb - 13,200 lb Mono-Leaf Spring Suspension	4050443C2	○|○	**85994**	...		...	...
17-23	DayCab Models with O.E.M. Number	2595314C1		**83062**				
17-23	LT-625 Models with 12,000 - 14,000 lb Taperleaf Spring Suspension	4050444C2	○|○	**85994**	...		...	...
17-23	Models with Hendrickson HTB 400LT Rear Air Suspension	60657-010		...	...	○|○	**85102**	...
		3684524C1		...	...	○|○	**85102**	...
		60657010		...	...	○|○	**85102**	...
		H60657-010		...	...	○|○	**85102**	...
		H60657010		...	...	○|○	**85102**	...
17-23	Models with International 40,000 lb Rear Air Suspension (52" Spacing- Heavy Duty Rear)	6127666C1		...	...	○|○	**85642**	...
MV								
2020	Models with 9,000 to 10,000 lb Front Suspension	6127088C1	○|○	**83163**	...		...	...
2020	Models with 20,000 lb International IROS Air Suspension	6127713C2		...	...	○|○	**85656**	...
2020	Models with Hendrickson HAS - 230 or 460 Rear Air Suspension	60675-003		...	...	○|○	**85976**	...
		60675-003L		...	...	○|○	**85976**	...
		3514952C1		...	...	○|○	**85976**	...
		60675003		...	...	○|○	**85976**	...
		60675003L		...	...	○|○	**85976**	...
		H60675-003		...	...	○|○	**85976**	...
		H60675003		...	...	○|○	**85976**	...
MV607								
19-22	Models with 9,000 to 10,000 lb Front Suspension	6127088C1	○|○	**83163**	...		...	...
19-22	Models with Hendrickson HAS - 230 or 460 Rear Air Suspension	60675-003		...	...	○|○	**85976**	...
		60675-003L		...	...	○|○	**85976**	...
		3514952C1		...	...	○|○	**85976**	...
		60675003		...	...	○|○	**85976**	...
		60675003L		...	...	○|○	**85976**	...
		H60675-003		...	...	○|○	**85976**	...
		H60675003		...	...	○|○	**85976**	...
19-22	Models with O.E.M. Number	2509223C91	○|○	**83054**				
20-22	Models with 20,000 lb International IROS Air Suspension	6127713C2		...	...	○|○	**85656**	...
PROSTAR								
14-15	Models with Sleeper Cab and 12,350 lb Leaf Spring Suspension	3606857C3	○|○	**85994**	...		...	...

APPLICATION GUIDE - TRUCKS, TRAILERS AND BUSES

Year Ano Année	Model Modelo Modle	OEM #		Front			Rear	
				Fleetline	GasSLX		Fleetline	GasSLX
INTERNATIONAL (CONT'D)								
PROSTAR (cont'd)								
11-16	Models With 56" or 72" Hi Roof Sleeper	2593803C91		**83062**				
		2595314C1		**83062**				
09-17	All models with 40,000 lb Rear Air Suspension	3620395C1		...	...	O|O	**85931**	**89458**
		4050340C1		...	...	O|O	**85931**	**89458**
		4050340C2		...	...	O|O	**85931**	**89458**
16-17	Models with Day Cab and 12,000 - 14,000 lb Taperleaf Front Spring Suspension	4050444C1	O|O	**85994**	...		...	...
		4050444C2	O|O	**85994**	...		...	...
09-18	Models with 12,350 lb Front Mono Leaf Spring Suspension	3813341C3	O|O	**85963**	...		...	...
		3813341C4	O|O	**85963**	...		...	...
08-20	Models with Hendrickson HAS - 230 or 460 Rear Air Suspension	57905-001		...	...	O|O	**85976**	...
		60675-003		...	...	O|O	**85976**	...
		60675-003L		...	...	O|O	**85976**	...
		3514952C1		...	...	O|O	**85976**	...
		57905001		...	...	O|O	**85976**	...
		60675003		...	...	O|O	**85976**	...
		60675003L		...	...	O|O	**85976**	...
		H60675-003		...	...	O|O	**85976**	...
		H60675003		...	...	O|O	**85976**	...
13-20	Models with 113" Sleeper Cab	3806341C3	O|O	**85995**	...		...	...
		3806341C4	O|O	**85995**	...		...	...
		3810581C3	O|O	**85995**	...		...	...
		3810581C4	O|O	**85995**	...		...	...
16-20	Sleeper Cabs with 12,000 lb - 13,200 lb Mono-Leaf Spring Suspension	4050443C1	O|O	**85994**	...		...	...
		4050443C2	O|O	**85994**	...		...	...
17-20	6 x 4 Models with O.E.M. Number	6127666C1		...	...	O|O	**85642**	...
RH613								
18-19	Models With 56" Hi Roof Sleeper	2595314C1		**83062**				
18-19	Models with O.E.M. Number	6127666C1		...	...	O|O	**85642**	...
18-19	RH-613 Models with 12,000 lb - 13,200 lb Mono-Leaf Spring Suspension	4050443C2	O|O	**85994**	...		...	...
18-19	RH Models with 12,000 - 14,000 lb Taperleaf Spring Suspension	4050444C2	O|O	**85994**	...		...	...
TERRASTAR								
12-17	Models with 10,000 & 13,500 lb Vari-Rate Rear Spring Suspension	3586902C2		...	...	O|O	**83364**	...
12-17	Models with 10,500 or 13,500 lb Vari-Rate Rear Spring Suspension	3586902C3		...	...	O|O	**83364**	...
		6127087C1		...	...	O|O	**83364**	...
12-18	Models with 6,000 to 7,000 lb Front Axle	3902993C1	O|O	**83135**	...		...	...
		3902993C3	O|O	**83135**	...		...	...
		3989717C1	O|O	**83135**	...		...	...
		3991991C1	O|O	**83135**	...		...	...
		OE17103	O|O	**83135**	...		...	...
		OE 18513	O|O	**83135**	...		...	...
2014	4 WD Models with Rear Spring Suspension	3945165C1		...	...	O|O	**83180**	...
		6127096C1		...	...	O|O	**83180**	...
TRANSTAR								
15-17	Models with O.E.M. Number	6127086C1	O|O	**85637**	...		...	...
WORKSTAR 7300								
15-20	Models trucks with day cab or extended cabs with Link Cabmate Model IDC7345	1201-9008	O|O	**83054**				
		2509223C91	O|O	**83054**				
		12019008	O|O	**83054**				
15-20	Models with 16,000 to 20,000 lb Front	6127704C1		**85670**	...		...	...

INTERNATIONAL (CONT'D)

WORKSTAR 7300 (cont'd)

Year Ano Année	Model Modelo Modle	OEM #	Front Fleetline	Front GasSLX	Rear Fleetline	Rear GasSLX
15-20	Models with Hendrickson HAS - 230 or 460 Rear Air Suspension	57905-001	...	...	85976	...
		60675-003	...	...	85976	...
		60675-003L	...	...	85976	...
		3514952C1	...	...	85976	...
		57905001	...	...	85976	...
		60675003	...	...	85976	...
		60675003L	...	...	85976	...
		H60675-003	...	...	85976	...
		H60675003	...	...	85976	...

WORKSTAR 7400

15-20	Models trucks with day cab or extended cabs with Link Cabmate Model IDC7345	1201-9008	83054					
		2509223C91	83054					
		12019008	83054					
15-20	Models with 16,000 to 20,000 lb Front	6127704C1	85670	...		...	...	
15-20	Models with Hendrickson HAS - 230 or 460 Rear Air Suspension	57905-001	...	...	85976	...		
		60675-003	...	...	85976	...		
		60675-003L	...	...	85976	...		
		3514952C1	...	...	85976	...		
		57905001	...	...	85976	...		
		60675003	...	...	85976	...		
		60675003L	...	...	85976	...		
		H60675-003	...	...	85976	...		
		H60675003	...	...	85976	...		

WORKSTAR 7600

15-20	Models with 16,000 to 20,000 lb Front	6127704C1	85670	...		...	...	
15-20	Models with Hendrickson HAS - 230 or 460 Rear Air Suspension	57905-001	...	...	85976	...		
		60675-003	...	...	85976	...		
		60675-003L	...	...	85976	...		
		3514952C1	...	...	85976	...		
		57905001	...	...	85976	...		
		60675003	...	...	85976	...		
		60675003L	...	...	85976	...		
		H60675-003	...	...	85976	...		
		H60675003	...	...	85976	...		

WORKSTAR 7700

08-12	Models with Hendrickson HAS - 230 or 460 Rear Air Suspension	57905-001	...	...	85976	...		
		60675-003	...	...	85976	...		
		60675-003L	...	...	85976	...		
		3514952C1	...	...	85976	...		
		57905001	...	...	85976	...		
		60675003	...	...	85976	...		
		60675003L	...	...	85976	...		
		H60675-003	...	...	85976	...		
		H60675003	...	...	85976	...		

4000 SERIES

	4600, 4700, 4800, 4900 Models with Link Cab Suspension	1201-1044	83025					
		12011044	83025					
	Cabover Tractors with 74", 84" or 88" cabs with Link Cabmate Model IHB-2P	1202-0032	83016					
		12020032	83016					
	Conventional Tractors with Link Cabmate Model IHC43	1201-0012	83023					

APPLICATION GUIDE - TRUCKS, TRAILERS AND BUSES

Year Ano Année	Model Modelo Modle	OEM #		Front			Rear	
				Fleetline	GasSLX		Fleetline	GasSLX
INTERNATIONAL (CONT'D)								
4000 SERIES (cont'd)								
	Conventional Tractors with Link Cabmate Model IHC43	1202-0012	O|O	**83023**				
		12010012	O|O	**83023**				
		12020012	O|O	**83023**				
5000 SERIES								
94-16	Paystar - SBA Conventionals with Link Cabmate Model NP50 & NP50-A built after August of 1994 From 9/94	1201-1044	O|O	**83025**				
		1202-1044	O|O	**83025**				
		12011044	O|O	**83025**				
		12021044	O|O	**83025**				
96-16	Paystar - SFA Conventionals with Link Cabmate Model NP50 & NP50-A built after August of 1996 From 09/96	1201-1044	O|O	**83025**				
		1202-1044	O|O	**83025**				
		12011044	O|O	**83025**				
		12021044	O|O	**83025**				
7000 SERIES								
	7300, 7400, 7500 & 7600 Models with Link Cabmate Suspensions with O.E.M. Number	1201-1043	O|O	**83025**				
		1201-1049	O|O	**83025**				
		12011043	O|O	**83025**				
		12011049	O|O	**83025**				
	7600 Model trucks with day cab or extended cabs with Link Cabmate Model IDC76	1201-9010	O|O	**83053**				
		2509224C91	O|O	**83053**				
		12019010	O|O	**83053**				
7400								
	6 X 6 Models with O.E.M Number	4164161C1	O|O	**85929**	...		...	...
7600								
18-19	...	57905-001		...	...	O|O	**85976**	...
		60675-003		...	...	O|O	**85976**	...
		60675-003L		...	...	O|O	**85976**	...
		3514952C1		...	...	O|O	**85976**	...
		57905001		...	...	O|O	**85976**	...
		60675003		...	...	O|O	**85976**	...
		60675003L		...	...	O|O	**85976**	...
		H60675-003		...	...	O|O	**85976**	...
		H60675003		...	...	O|O	**85976**	...
2008	...	3533357C1	O|O	**85957**	...		...	...
		3533357C2	O|O	**85957**	...		...	...
		3533357C3	O|O	**85957**	...		...	...
		3576464C1	O|O	**85957**	...		...	...
		3576464C2	O|O	**85957**	...		...	...
2008	...	57905-001		...	...	O|O	**85976**	...
		60675-003		...	...	O|O	**85976**	...
		60675-003L		...	...	O|O	**85976**	...
		3514952C1		...	...	O|O	**85976**	...
		57905001		...	...	O|O	**85976**	...
		60675003		...	...	O|O	**85976**	...
		60675003L		...	...	O|O	**85976**	...
		H60675-003		...	...	O|O	**85976**	...
		H60675003		...	...	O|O	**85976**	...
2008	...	60680-004		...	...		**83143**	...
		60680-004L		...	...		**83143**	...

Year Ano Année	Model Modelo Modle	OEM #		Front			Rear	
				Fleetline	GasSLX		Fleetline	GasSLX
INTERNATIONAL (CONT'D)								
7600 (cont'd)								
2008	...	60680004		...	...		83143	...
		60680004L		...	...		83143	...
		H60680004		...	...		83143	...
8000 SERIES								
	8600 Model trucks with day cab or extended cabs with Link Cabmate Model IDC86	1201-9011	○|○	83053				
		12019011	○|○	83053				
8600								
03-07	Tractors with O.E.M. Number	1201-9008	○|○	83054				
		2509223C91	○|○	83054				
		12019008	○|○	83054				
9000 SERIES								
04-09	Models with 72" High-Roof Sleeper	1201-0254	○|○	83051				
		2589922C1	○|○	83051				
		12010254	○|○	83051				
04-09	Models With 51" Low-Roof Sleeper	1201-0154	○|○	83051				
		2585145C1	○|○	83051				
		12010154	○|○	83051				
93-18	48" & 60" Bentz Sleepers on 9000 Models Conventional Tractors with Link Cabmate Model IHS4860 From 01/93	1201-1044	○|○	83025				
		1202-1044	○|○	83025				
		12011044	○|○	83025				
		12021044	○|○	83025				
97-18	9100 & 9200 Models Conventionals with Link Cabmate Model ND92-A From 03/97	1202-1043	○|○	83025				
		12021043	○|○	83025				
	9300 & 9400 Conventional Tractors with Link Cabmate Model IHC93-A	1202-1043	○|○	83025				
		2503529C1	○|○	83025				
		12021043	○|○	83025				
9100I								
	Models with Pro Sleepers	4164152C1	○|○	85924	89457		...	...
9200I								
	Models with Pro Sleepers	4164152C1	○|○	85924	89457		...	...
9400I								
	Models with Pro Sleepers	4164152C1	○|○	85924	89457		...	...
CV515								
2023	Models with 11K, 13.5K or 15.5K VARI-RATE Rear Suspension	4206863C1		...	...		83398	...
		4208946C1		...	...		83398	...
2023	Models with Taperleaf Front	4207304C1		83397	...		...	...
EMV607								
2023	Models with 12,000 lb Parabolic Taper Leaf Springs	6127714C1	○|○	85928	...		...	...
97-21	Eagle Pro-Sleeper	1202-0054	○|○	83021				
		12020054	○|○	83021				
	Models with Link Cabmate Suspensions with O.E.M. Number	1201-9007	○|○	83054				
		1201-9009	○|○	83054				
		1201-9013		83062				
		1201-9014		83062				
		1201-9018		83062				

APPLICATION GUIDE - TRUCKS, TRAILERS AND BUSES

Year Ano Année	Model Modelo Modle	OEM #		Front			Rear	
				Fleetline	GasSLX		Fleetline	GasSLX
INTERNATIONAL (CONT'D)								
	Models with Link Cabmate Suspensions with O.E.M. Number	1201-9021		**83062**				
		1202-0012	O|O	**83023**				
		1202-0032	O|O	**83016**				
		1202-0042	O|O	**83025**				
		1202-0043	O|O	**83025**				
		1202-0044	O|O	**83025**				
		2507948C1	O|O	**83054**				
		3560705C2	O|O	**83054**				
		12019007	O|O	**83054**				
		12019009	O|O	**83054**				
		12019013		**83062**				
		12019014		**83062**				
		12019018		**83062**				
		12019021		**83062**				
		12020012	O|O	**83023**				
		12020032	O|O	**83016**				
		12020042	O|O	**83025**				
		12020043	O|O	**83025**				
		12020044	O|O	**83025**				
	Models with Link Cab Suspension	1201-0154	O|O	**83051**				
	Models with Link Cab Suspension NPS90	1202-0054	O|O	**83021**				
		12020054	O|O	**83021**				
	Models with O.E.M. Number	1202-0054	O|O	**83021**				
		2508326C1	O|O	**83021**				
		2508327C1	O|O	**83025**				
		2590915C1		**83062**				
		2590916C1		**83062**				
		2597458C91		**83062**				
		2601488C91		**83062**				
		2602021C1		**83062**				
		3557165C1	O|O	**83053**				
		3557167C3	O|O	**83053**				
		4205983C1		**83397**	...		...	...
		12020054	O|O	**83021**				
		AMS66161	O|O	**83053**				
		OE14771		**83062**				
	Navistar 60" Sleepers with Link Cabmate Model IHS60 To 1991	1202-1043	O|O	**83025**				
		12021043	O|O	**83025**				
	S2500, S2600, 8100, 8200, & 8300 Models Conventional Tractors with Link Cabmate Model NAV80	1202-1043	O|O	**83025**				
		12021043	O|O	**83025**				
PAYSTAR								
	Models with 12,000 to 14,000 Front Axle	4164155C1	O|O	**85058**	**89431**		...	...
PROSTAR								
2021	6 x 4 Models with O.E.M. Number	6127666C1		...	...	O|O	**85642**	...
2021	Models with 113" Sleeper Cab	3806341C3	O|O	**85995**	...		...	...
		3806341C4	O|O	**85995**	...		...	...
		3810581C3	O|O	**85995**	...		...	...
		3810581C4	O|O	**85995**	...		...	...
2021	Sleeper Cabs with 12,000 lb - 13,200 lb Mono-Leaf Spring Suspension	4050443C1	O|O	**85994**	...		...	...
		4050443C2	O|O	**85994**	...		...	...
INTERNATIONAL (NAVISTAR)								
A, B, AC AND BC CONVENTIONAL								
	A-140 (4 x 4) Models	.....		...	...	O|O	**83216**	...

Year Ano Année	Model Modelo Modle	OEM #		Front			Rear	
				Fleetline	GasSLX		Fleetline	GasSLX
INTERNATIONAL (NAVISTAR) (CONT'D)								
A, B, AC AND BC CONVENTIONAL (cont'd)								
	A-160, A-170, A-180, AC-160, AC-170, AC-180, B-160, B-170, B-180, BC-160, BC-170, BC-180 Models	308649C91		...	...	O|O	83216	...
		308650C91		...	...	O|O	83216	...
		453567C91		...	...	O|O	83216	...
	A-170, B-170, AC-170, ACF-170, BC-170, A-180, B-180, AC-180, BC-180, BCF-170 Models	308646C91	O|O	85012	89413		...	...
	AB-140 Models	.....	O|O	G63306	...		...	...
	AC-170 & BC-170 (4 x 4) Models	.....		...	...	O|O	83216	...
	AC-180 & BC-180 (4 x 4) Models	.....		...	...	O|O	83216	...
	BCF-195-D Models	.....		...	...	O|O	83225	...
	C-150 Models	.....	O|O	G63306	...		...	...
		308649C91		...	...	O|O	83216	...
		308668C91	O|O	85012	89413		...	...
		453556C91		...	...	O|O	85012	89413
		453567C91		...	...	O|O	83216	...
ADDITIONAL O.E.M. INTERCHANGES								
19-21	Models with O.E.M. Number	4164146C1	O|O	83169	...		...	...
BE SERIES SCHOOL BUS								
	BE200 Model School Bus Chassis To 2012	3609400C1		...	...	−|O	83317	...
		3609400C2		...	...	−|O	83317	...
BINDER								
	Binder	453556C91	O|O	85012	89413		...	...
		453571C91		...	...	O|O	83216	...
		467983C91	O|O	85012	89413		...	...
		467985C91	O|O	85012	89413		...	...
		471201C91	O|O	85012	89413		...	...
	S Models Binder	472367C91	−|−	83318	...		...	...
CARGOSTAR								
	CO-190, COF-190, CO-1950 , COF-1950 & COT-1950, VCO-190, VCOF-190 & CO-200, DCO-200, VCO-200 & CO-220, VCO-220 & VCO-190 (4 man cab)	204994R91	O|O	83225	...		...	...
	CO-190, COF-190, VCO-190, VCOF-190 & CO-200, DCO-200, VCO-200 & CO-220, VCO-220 & VCO-190 (4 man cab)	210534R92	O|O	83225	...		...	...
		288920C91	O|O	83225	...		...	...
		288921R92	O|O	83225	...		...	...
		308648C91	O|O	83225	...		...	...
		452566C91	O|O	83225	...		...	...
		453561C91	O|O	83225	...		...	...
		453562C91	O|O	83225	...		...	...
		453565C91	O|O	83225	...		...	...
		453569C91	O|O	83225	...		...	...
		467371C91	O|O	83225	...		...	...
		467372C91	O|O	83225	...		...	...
	CO-190, VCO-190, CO-200, DCO-200, VCO-200,CO-220, VCO-220 With Air Ride Suspension After Chassis No G-387453	350425C1		...	...	O|O	85300	89419
		462557C91		...	...	O|O	85300	89419
	CO-190, VCO-190, CO-200, DCO-200, VCO-200,CO-220, VCO-220 With Air Ride Suspension before Chassis No G-387453	350426C91		...	...	O|O	85734	...
	CO-1600, CO-1610A & B, CO-1630A & B, CO-1700, CO-1710A & B, CO-1730A & B, CO-1750, CO-1750A & B, CO-1800, CO-1810A & B, CO-1830A & B, CO-1850, and CO-1850A & B	206620R91		...	...	O|O	83216	...
		206621R92		...	...	O|O	83216	...
		294334C91		...	...	O|O	83216	...
		308646C91		...	...	O|O	85012	89413

INTERNATIONAL (NAVISTAR) (CONT'D)

CARGOSTAR (cont'd)

Year / Ano / Année	Model / Modelo / Modle	OEM #		Front Fleetline	Front GasSLX		Rear Fleetline	Rear GasSLX
	CO-1600, CO-1610A & B, CO-1630A & B, CO-1700, CO-1710A & B, CO-1730A & B, CO-1750, CO-1750A & B, CO-1800, CO-1810A & B, CO-1830A & B, CO-1850, and CO-1850A & B	308649C91		...	...	O|O	83216	...
		308650C92		...	...	O|O	83216	...
		360444C91		...	...	O|O	85012	89413
		453564C91		...	...	O|O	85012	89413
		453567C91		...	...	O|O	83216	...
		453570C91		...	...	O|O	83216	...
		467983C91		...	...	O|O	85012	89413
		467984C91		...	...	O|O	83216	...
		3085640C92		...	...	O|O	83216	...
	CO-1610A & B, CO-1630A & B, CO-1710A &B, CO-1730A & B, CO-1750A & B, CO-1810A & B, CO-1830A & B, COF-1810A & B - Exc. with 9000, 10800, or 12000 lb Front Axle	453572C91	O|O	83309	...		...	...
	CO-1610A & B, CO-1630A & B, CO-1710A &B, CO-1730A & B, CO-1750A & B, CO-1810A & B, CO-1830A & B, COF-1810A & B - With 9000, 10800, or 12000 lb Front Axle	873619C92	O|O	83314	...		...	...
		873619C93	O|O	83314	...		...	...
	CO-1910A & B, CO-1950A & B, COF-1910A& B, COF-1950A & B	453572C91	O|O	83309	...		...	...
		873619C92	O|O	83314	...		...	...
	CO-1950 , COF-1950 & COT-1950	288920C91	O|O	83225	...		...	...
		288921C91	O|O	83225	...		...	...
		308648C91	O|O	83225	...		...	...
		453561C91	O|O	83225	...		...	...
		453565C91	O|O	83225	...		...	...
		453566C91	O|O	83225	...		...	...
		453569C91	O|O	83225	...		...	...
		467371C91	O|O	83225	...		...	...
		467372C91	O|O	83225	...		...	...
	CO-1950 with Air Ride Suspension After Chassis No. G-387453	350425C1		...	...	O|O	85300	89419
		462557C91		...	...	O|O	85300	89419
	CO-1950 with Air Ride Suspension Before Chassis No. G-387453	350426C1		...	...	O|O	85734	...

CE SERIES SCHOOL BUS

05-13	CE Model School Buses with 22,000 lb Rear Spring Suspension	501906C92		...	...	–|O	83317	...
		OE13424S		...	...	–|O	83317	...
06-18	CE Model School Buses (71 Capacity) with 9,000 to 10,000 lb Front Suspension	3578105C1	O|O	83163	...		...	...
		3578105C2	O|O	83163	...		...	...
		OE13402S	O|O	83163	...		...	...
10-18	CE Model School Buses with 20,000 lb International IROS Air Suspension	3578858C2		...	...	O|O	85926	...
		6127713C1		...	...	O|O	85926	...
13-18	CE Model School Buses with 6,000 to 8,000 lb Front Axles	6127688C1	O|O	83169	...		...	...
06-21	CE Model School Buses (71 Capacity) with 9,000 to 10,000 lb Front Suspension	6127088C1	O|O	83163	...		...	...

CO-TRANSTAR AND TRANSTAR II

	7070B, F-7070B, CO-7070B & COF-7070B Models	426744R91	O|O	85303	89422		...	...
		426744R92	O|O	85303	89422		...	...
		453576C91	O|O	85303	89422		...	...
		453576C92	O|O	85303	89422		...	...
		477132C1	O|O	85303	89422		...	...
	CO-4010, COF-4010, COT-4010, COT-4010D, CO-4050, COF-4050, COT-4050, CO-4040A & B, CO-4070D, COF-4070B, COF-4070D, COT-4070D, COF-4077, COF-4077A, COF-4080D, CO-4090A, COF-4090A	426744R91	O|O	85303	89422		...	...
		426744R92	O|O	85303	89422		...	...
		453576C91	O|O	85303	89422		...	...
		453576C92	O|O	85303	89422		...	...

Year Ano Année	Model Modelo Modle	OEM #		Front			Rear	
				Fleetline	GasSLX		Fleetline	GasSLX
INTERNATIONAL (NAVISTAR) (CONT'D)								
CO-TRANSTAR AND TRANSTAR II (cont'd)								
	CO-4010, COF-4010, COT-4010, COT-4010D, CO-4050, COF-4050, COT-4050, CO-4040A & B, CO-4070D, COF-4070B, COF-4070D, COT-4070D, COF-4077, COF-4077A, COF-4080D, CO-4090A, COF-4090A	477132C1	O|O	**85303**	**89422**		**...**	**...**
	CO-4070A, COF-4070A, COF-4090A with Rear Suspension	462557C91		**...**	**...**	O|O	**85300**	**89419**
CXT SERIES								
	CXT Models with 9,000 to 10,000 lb Front Suspension	3606770C1	O|O	**83163**	**...**		**...**	**...**
		3606770C2	O|O	**83163**	**...**		**...**	**...**
DURASTAR - 1000 SERIES								
	1300 Models	56110T8123	–|O	**G63432**	**...**		**...**	**...**
		56110T8129	–|O	**G63432**	**...**		**...**	**...**
		56110-T8123	–|O	**G63432**	**...**		**...**	**...**
		56110-T8129	–|O	**G63432**	**...**		**...**	**...**
		66400	–|O	**G63432**	**...**		**...**	**...**
DURASTAR - 4300, 4400 SERIES								
10-11	Models with 40,000 lb Rear Air Suspension	3549099C2		**...**	**...**	O|O	**85923**	**89458**
10-12	Models with 6,000 to 8,000 lb Front Suspension	3533356C1	O|O	**83135**	**...**		**...**	**...**
		3533356C2	O|O	**83135**	**...**		**...**	**...**
10-12	School Bus models with 6,000 to 8,000 lb Front Suspension	3533356C1	O|O	**83135**	**...**		**...**	**...**
		3533356C2	O|O	**83135**	**...**		**...**	**...**
10-15	Models with 12,000 lb Front axle	3533357C1	O|O	**85957**	**...**		**...**	**...**
		3533357C2	O|O	**85957**	**...**		**...**	**...**
		3533357C3	O|O	**85957**	**...**		**...**	**...**
13-18	Models with 6,000 to 8,000 lb Front Suspension	3533356C3	O|O	**83169**	**...**		**...**	**...**
		6127688C1	O|O	**83169**	**...**		**...**	**...**
16-19	Models with 20,000 lb International IROS Air Suspension	6127713C1		**...**	**...**	O|O	**85926**	**...**
16-20	Models with 11,000 lb to 14,000 lb Front axle	6127714C1	O|O	**85928**	**...**		**...**	**...**
	Models with 20,000 lb International IROS Air Suspension To 2015	3578858C1		**...**	**...**	O|O	**85926**	**...**
		3578858C2		**...**	**...**	O|O	**85926**	**...**
	Models with International IROS Air Suspension	3553628C1		**...**	**...**	O|O	**85927**	**...**
		3553628C2		**...**	**...**	O|O	**85927**	**...**
		3553628C3		**...**	**...**	O|O	**85927**	**...**
		3553628C4		**...**	**...**	O|O	**85927**	**...**
	Models with O.E.M. Number	6127690C1		**...**	**...**	O|O	**85923**	**89458**
F & S SERIES								
	1600, 1700, 1800, 1900, 2100 Models	453576C92	O|O	**85303**	**89422**		**...**	**...**
		3000070C91	–|–	**83456**	**89447**		**...**	**...**
	1600, 1700, 1800, 1900, 2100 Models with International Air Suspension	501553C91		**...**	**...**	O|O	**85003**	**89411**
		1675455C1		**...**	**...**	O|O	**85003**	**89411**
		1690035C1		**...**	**...**	O|O	**85003**	**89411**
		2018987C1		**...**	**...**	O|O	**85003**	**89411**
		2018987C2		**...**	**...**	O|O	**85003**	**89411**
	1600, 1700, 1800, 1900, 2100 Models with Neway ARD-234 Air Suspension	537524C91		**...**	**...**	O|O	**83123**	**89405**
	1624, 1654, 1724, 1754, 1824, 1854, 1924, F1924, 1925, 1954, F1954, 1955, 2124, 2125, F2125, 2154, 2155, 2275, F2275, 2524, F2524, 2554, F2554, 2574, F2574, 2575, F2575, F2624, F2654, F2674 Models with 9000, 10800 or 12000 lb Front Axle	472411C91	–|–	**83456**	**89447**		**...**	**...**
		472412C91	–|–	**83456**	**89447**		**...**	**...**
		586724C91	–|–	**83456**	**89447**		**...**	**...**
	1624, 1654, 1724, 1754, 1824, 1854, 1924, F1924, 1925, 1954, F1954, 1955, 2124, 2125, F2125, 2154, 2155 Models Exc. with Rear Axle Codes 14029, 14030, 14187	501905C91		**...**	**...**	–|O	**83301**	**...**
		501906C91		**...**	**...**	–|O	**83317**	**...**
	1624, 1654, 1724, 1754, 1824, 1854, 1924, F1924, 1925, 1954, F1954, 1955, 2124, 2125, F2125, 2154, 2155 Models with 5000, 6000 or 7500 lb Front Axle	472367C91	–|–	**83318**	**...**		**...**	**...**

Year Ano Année	Model Modelo Modle	OEM #		Front			Rear	
				Fleetline	GasSLX		Fleetline	GasSLX
INTERNATIONAL (NAVISTAR) (CONT'D)								
F & S SERIES (cont'd)								
	1624, 1654, 1724, 1754, 1824, 1854, 1924, F1924, 1925, 1954, F1954, 1955, 2124, 2125, F2125, 2154, 2155 Models with Rear Axle Codes 14029, 14030, 14187	501905C91		...	...	−|○	83301	...
	1924, 1954 (6 x 6) Models	472367C91	−|−	83318	...		...	...
		472414C91	−|−	83318	...		...	...
	2275, F2275, 2524, F2524, 2554, F2554, 2574, F2574, 2575, F2575, F2624, F2654, F2674 Models with International Corporate Air Suspension	501553C91		...	...	○|○	85003	89411
		1675455C1		...	...	○|○	85003	89411
		1690035C1		...	...	○|○	85003	89411
		2018987C1		...	...	○|○	85003	89411
		2018987C2		...	...	○|○	85003	89411
	2275, F2275, 2524, F2524, 2554, F2554, 2574, F2574, 2575, F2575, F2624, F2654, F2674 Models with Neway ARD-125/244 Air Suspension	790335C91		...	...	○|○	83209	89414
	2275, F2275, 2524, F2524, 2554, F2554, 2574, F2574, 2575, F2575, F2624, F2654, F2674 Models with Neway ARD-234 Air Suspension	537524C91		...	...	○|○	83123	89405
	2275, F2275, 2524, F2524, 2554, F2554, 2574, F2574, 2575, F2575, F2624, F2654, F2674 Models with Ridwell Rear Suspension	534464C1		...	...	○|○	85734	...
FIRETRUCK								
	CO-8190	204994R91	○|○	83225	...		...	...
		308648C91	○|○	83225	...		...	...
		453561C91	○|○	83225	...		...	...
		453565C91	○|○	83225	...		...	...
		467371C91	○|○	83225	...		...	...
	Models with O.E.M. Number	210919R91		...	...	○|○	85307	...
FLEETSTAR - CONVENTIONAL								
	1900, F-1900, T-1900, 1950, F-1950, T-1950, 2000, 2000D, F-2000D & T-2000D Models	210535R91	○|○	83225	...		...	...
		453568C91	○|○	83225	...		...	...
		467372C91	○|○	83225	...		...	...
	1910A, F-1910A, 2010A, F-2010A, 2050A, F-2050A , 2070A, F-2070A, 2110A & 2150A Models	206621R92	○|○	83216	...		...	...
		308650C92	○|○	83216	...		...	...
		453570C91	○|○	83216	...		...	...
		467984C91	○|○	83216	...		...	...
	2000D, 2010A, 2050A, 2070A, 2110A, 2150A with Air Ride Suspension After Chassis No G-387453	350425C1		...	...	○|○	85300	89419
		462557C91		...	...	○|○	85300	89419
	2000D, 2010A, 2050A, 2070A, 2110A, 2150A with Air Ride Suspension Before Chassis No G-387453	350426C1		...	...	○|○	85734	...
	F-2010A, F-2050A, F-2000D with Air Ride Suspension	350425C1		...	...	○|○	85300	89419
		462557C91		...	...	○|○	85300	89419
	R-185, R-190, RD-190, R-200, RD-200, RF-200, RDF-200, R-220, RD-220, R210 & RF-210	210533R91	○|○	83225	...		...	...
		210534R92	○|○	83225	...		...	...
		210535R91	○|○	83225	...		...	...
		210536R91	○|○	83225	...		...	...
		210537R91	○|○	83225	...		...	...
		210538R91	○|○	83225	...		...	...
		453562C91	○|○	83225	...		...	...
		453568C91	○|○	83225	...		...	...
		467371C91	○|○	83225	...		...	...
		467372C91	○|○	83225	...		...	...
LOADSTAR - CONVENTIONAL								
	1600, 1600 (4x4), 1610, 1610 (4x4), 1610FC, 1700, 1700 (4x4), 1710, 1710 (4x4), F-1700, 1750, 1800, 1810, F-1800, F-1800-D, 1850, F-1850, 1890 & 1890-D with 9000, 10800 or 12000 lb Front Axle	329316C92	○|○	85012	89413		...	...

INTERNATIONAL (NAVISTAR) (CONT'D)

LOADSTAR - CONVENTIONAL (cont'd)

Year Ano Année	Model Modelo Modle	OEM #		Front Fleetline	Front GasSLX		Rear Fleetline	Rear GasSLX
	1600, 1600 (4x4), 1610, 1610 (4x4), 1610FC, 1700, 1700 (4x4), 1710, 1710 (4x4), F-1700, 1750, 1800, 1810, F-1800, F-1800-D, 1850, F-1850, 1890 & 1890-D with 9000, 10800 or 12000 lb Front Axle	360444C91	O|O	85012	89413		...	...
		453564C91	O|O	85012	89413		...	...
		467983C91	O|O	85012	89413		...	...
		471201C91	O|O	85012	89413		...	...
	1600, 1600 (4x4), 1610, 1610 (4x4), 1610FC, 1700, 1700 (4x4), 1710, 1710 (4x4), F-1700, 1750, 1800, 1810, F-1800, F-1800-D, 1850, F-1850, 1890 & 1890-D with Axle Codes 02089, 02091	206620R91	O|O	83216	...		...	...
		308649C91	O|O	83216	...		...	...
		453567C91	O|O	83216	...		...	...
	1600, 1600 (4x4), 1610, 1610 (4x4), 1700, 1700 (4x4), 1710, 1710 (4x4), 1750, 1800, 1810, 1850, 1890 & 1890-D Models	206620R91		...	...	O|O	83216	...
		206621R91		...	...	O|O	83216	...
		308649C91		...	...	O|O	83216	...
		308650C92		...	...	O|O	83216	...
		329316C92		...	...	O|O	85012	89413
		360444C91		...	...	O|O	85012	89413
		383379C91		...	...	O|O	83308	...
		453564C91		...	...	O|O	85012	89413
		453567C91		...	...	O|O	83216	...
		453570C91		...	...	O|O	83216	...
		453575C91		...	...	O|O	83308	...
		467983C91		...	...	O|O	85012	89413
		467984C91		...	...	O|O	83216	...
		471203C91		...	...	O|O	83308	...
		474002C91		...	...	O|O	83308	...
		873622C91		...	...	O|O	83308	...
	1600, 1600 (4x4), 1610, 1610 (4x4), 1700, 1700 (4x4), 1710, 1710 (4x4), F-1700, 1750, 1800, 1810, F-1800, F-1800-D, 1850, F-1850, 1890 & 1890-D Exc. Axle Codes 02054, 02057, 02059, 02089, 02091, 02098, 02101, 02109, 02139, 02208, 02218, 02228, 02309, 0232	308668C92	O|O	85012	89413		...	...
		453556C91	O|O	85012	89413		...	...
		467985C91	O|O	85012	89413		...	...
		874695R91	O|O	85012	89413		...	...
		874695R92	O|O	85012	89413		...	...
	1600, 1610FC, 1700, 1700 (4x4), 1800, 1890, 1890D Models	384435C91		...	...	O|O	83216	...
		453571C91		...	...	O|O	83216	...
		462753C91		...	...	O|O	83216	...
	1700, 1750, 1800, 1850 Models with Air Ride Suspension	462557C91		...	...	O|O	85300	89419
	M1600, M1700, M1800, M1900, M2100 Models	453576C92	O|O	85303	89422		...	...

LONESTAR - SERIES

	Day Cab Models with O.E.M. Number	3688615C1		...	...	O|O	85931	89458

METRO & MULTI-SHOP SERIES

66-72	Metro Models M700, 800, 900-U, 1000, 1100,	.....	O|O	G63306	...		...	...
66-72	Metro Models M1200 - Exc. Frame Code 01000.0962	.....	O|O	G63299	...		...	...
66-72	Metro Models M1200 with 14016 Reg. Rear Springs & with 14020 Rear Axle Code	.....	O|O	G63306	...		...	...
66-72	Metro Models M1200 with Axle Code 0208 & Frame Code 01000.0962	.....	O|O	G63306	...		...	...
66-72	Metro Models M1200 with Code 03204 Aux. Springs	.....		...	...	O|O	G63299	...
73-75	Multi-Stop Models MS-1210 & 1510	.....		...	...	O|O	G63306	...
	M1600, M1700, M1800, M1900, M2100 Models - Exc. with Rear Axle Codes 14029, 14030, 14187	501905C91		...	...	–|O	83301	...
		501906C91		...	...	–|O	83317	...
	M1600, M1700, M1800, M1900, M2100 Models with 5000, 6000 or 7500 lb Front Axle	472367C91	–|–	83318	...		...	...

Year Ano Année	Model Modelo Modle	OEM #		Front			Rear	
				Fleetline	GasSLX		Fleetline	GasSLX
INTERNATIONAL (NAVISTAR) (CONT'D)								
METRO & MULTI-SHOP SERIES (cont'd)								
	M1600, M1700, M1800, M1900, M2100 Models with 9000, 10800 or 12000 Front Axle	472411C91	−|−	**83456**	**89447**		...	...
		472412C91	−|−	**83456**	**89447**		...	...
		586724C91	−|−	**83456**	**89447**		...	...
	M1600, MC1600, M1700 & MC1700	308668C91	O|O	**85012**	**89413**		...	...
		308669C91	O|O	**85012**	**89413**		...	...
		453556C91	O|O	**85012**	**89413**		...	...
		874695R91	O|O	**85012**	**89413**		...	...
		874696R91	O|O	**85012**	**89413**		...	...
	MA1200, M1400, M1500, MA1500	308669C91		...	...	O|O	**85012**	**89413**
		453556C91		...	...	O|O	**85012**	**89413**
MV SERIES								
19-22	MV607 Models with 11,000 lb to 14,000 lb Front axle	6127714C1	O|O	**85928**	...		...	...
2019	MV607 Models with 8,000 lb Front Suspension	3533356C3	O|O	**83169**	...		...	...
2019	MV607 Models with 20,000 lb International IROS Air Suspension	6127713C1		...	...	O|O	**85926**	...
2019	MV607 Models with 40,000 lb Rear Air Suspension	3549099C3		...	...	O|O	**85923**	**89458**
	Additional O.E.M. Interchanges	70334	−|O	**85316**	**89426**		...	...
		453527C91		...	...	−|O	**85311**	**89424**
		453528C91		...	...	−|O	**85311**	**89424**
		462603C91	−|−	**85705 or 89447**				
		463926C91	−|−	**85705 or 89447**				
		3541456C1	O|O	**85929**	...		...	...
		3544768C1		...	...	O|O	**85926**	...
		3544768C2		...	...	O|O	**85926**	...
		3549100C1		...	...	O|O	**85926**	...
		3558989C1	O|O	**85925**				
		3558989C2	O|O	**85925**				
		3596107C1		...	...	O|O	**85927**	...
		3596107C2		...	...	O|O	**85927**	...
		3596107C3		...	...	O|O	**85927**	...
		3596107C4		...	...	O|O	**85927**	...
		AMS650102	O|O	**85001 or 89410**				
		AMS650107	−|O	**85316**	**89426**		...	...
		AMS650400		...	...	−|O	**85033**	**89427**
		AMS650402		...	...	−|O	**85311**	**89424**
		AMS650404		...	...	−|−	**85310**	**89423**
		AMS650405	O|O	**85023 or 89415**				
		AMS650406		...	...	O|O	**85024**	...
		AMS650408		...	...	−|O	**85319**	**89428**
	Models with Chalmers 40,000 lb Rear Suspension	800670		...	...	O|O	**85060**	...
	Models with Meritor AirLink Suspension	446-51-211		...	...	O|O	**85739**	...
		44651211		...	...	O|O	**85739**	...
	Models with O.E.M. Number	4C4Z18124N	O|O	**85957**	...		...	...
		4C4Z18125DA		...	...	O|O	**85926**	...
		4C4Z-18124-N	O|O	**85957**	...		...	...
		4C4Z-18125-DA		...	...	O|O	**85926**	...
		6ETZ18125A		...	...	O|O	**83364**	...
		6ETZ-18125-A		...	...	O|O	**83364**	...
		47902-24		...	...	O|O	**83137**	...
		503610C1		...	...	O|O	**83207**	**89407**
		3000098C1		...	...	−|O	**83317**	...
		3571711C1	−|O	**85316**	**89426**		...	...
		3581109C1	O|O	**85924**	**89457**		...	...

APPLICATION GUIDE - TRUCKS, TRAILERS AND BUSES

Year Ano Année	Model Modelo Modle	OEM #		Front			Rear	
				Fleetline	GasSLX		Fleetline	GasSLX
INTERNATIONAL (NAVISTAR) (CONT'D)								
	Models with O.E.M. Number	3584116C1	O|O	**83175**	...		...	...
		3584116C2	O|O	**83175**	...		...	...
		3584117C1	O|O	**83135**	...		...	...
		3584117C2	O|O	**83135**	...		...	...
		3584118C1	O|O	**85928**	...		...	...
		3584118C2	O|O	**85928**	...		...	...
		3584535C1	O|O	**85924**	**89457**		...	...
		3584535C2	O|O	**85924**	**89457**		...	...
		3601600C1		...	...	O|O	**85082**	...
		3601600C2		...	...	O|O	**85082**	...
		3601600C3		...	...	O|O	**85082**	...
		3892458C1		...	...	O|O	**85926**	...
		3892458C2		...	...	O|O	**85926**	...
		4072186C1	O|O	**85928**	...		...	...
		4164149C1		...	...	O|O	**85923**	**89458**
		4211080C1	O|O	**85957**	...		...	...
		4212927C1	O|O	**85929**	...		...	...
		4212932C1		...	...	O|O	**85931**	**89458**
		4213760C1	O|O	**83163**	...		...	...
		4790224		...	...	O|O	**83137**	...
		90044025		...	...	O|O	**83209**	**89414**
PAYSTAR - 5000 SERIES								
10-11	5900i Models with 12,000 lb - 14,000 lb Front axle	2015556C1	–|O	**85316**	**89426**		...	...
10-13	Models with Hendrickson HMX 400/460 Haulmax with 16.5" Saddle	60680-004		...	...		**83143**	...
		60680-004L		...	...		**83143**	...
		60680004		...	...		**83143**	...
		60680004L		...	...		**83143**	...
10-15	5900 SB Models with 46,000 lb Hendrickson Rear Air Suspension	3626571C1		...	...	O|O	**85072**	...
		H60657-003		...	...	O|O	**85072**	...
		H60657003		...	...	O|O	**85072**	...
	5010, F-5010, F-5050, F-5050SF, 5070, F-5070, F-5070SF Models	426744R91	O|O	**85303**	**89422**		...	...
		426744R92	O|O	**85303**	**89422**		...	...
		453576C91	O|O	**85303**	**89422**		...	...
		453576C92	O|O	**85303**	**89422**		...	...
		477132C1	O|O	**85303**	**89422**		...	...
	5900 SB Models with Hendrickson Primaax 230, 460 and 690 Air Suspension (8-1/2" to 10" Ride Height) To 2018	60657-003		...	...	O|O	**85072**	...
		60657-003L		...	...	O|O	**85072**	...
		60657003		...	...	O|O	**85072**	...
		60657003L		...	...	O|O	**85072**	...
	5900 SB Models with Hendrickson Primaax EX 232, 462 and 692 Air Suspension (8-1/2" to 10" Ride Height) To 2018	60657-003		...	...	O|O	**85072**	...
		60657-003L		...	...	O|O	**85072**	...
		60657003		...	...	O|O	**85072**	...
		60657003L		...	...	O|O	**85072**	...
	Models with 10,000 to 16,000 lb Front Suspension	3576465C1	O|O	**85929**	...		...	...
		3576465C2	O|O	**85929**	...		...	...
		3816234C1	O|O	**85929**	...		...	...
	Models with 14,000 lb Front axle	3596878C2	O|O	**85648**	...		...	...
		4070352C1	O|O	**85648**	...		...	...
	Models with O.E.M. Number	6127690C1		...	...	O|O	**85923**	**89458**
PROSTAR								
	Day Cab Models with O.E.M. Number	3737576C1		...	...	O|O	**85931**	**89458**

Year Ano Année	Model Modelo Modle	OEM #		Front			Rear	
				Fleetline	GasSLX		Fleetline	GasSLX
INTERNATIONAL (NAVISTAR) (CONT'D)								
PROSTAR (cont'd)								
	Models with 12,350 lb Front Mono Leaf Spring Suspension To 2013	3610198C1	O|O	85963	...		...	...
	Models with Day Cab and 12,000 to 14,000 lb Taperleaf Front Spring Suspension To 2015	3606859C1	O|O	85954	...		...	...
		3606859C2	O|O	85954	...		...	...
		3606859C3	O|O	85994	...		...	...
		3737574C1	O|O	85954	...		...	...
		3812837C1	O|O	85954	...		...	...
	Models with Day Cab and Air Suspension	3610199C1	O|O	85964	...		...	...
	Models with Hendrickson HTB 400LT Rear Air Suspension	60657-006		...	...	O|O	85102	...
		60657-010		...	...	O|O	85102	...
		60657-011		...	...	O|O	85102	...
		60657006		...	...	O|O	85102	...
		60657010		...	...	O|O	85102	...
		60657011		...	...	O|O	85102	...
		H60657-006		...	...	O|O	85102	...
		H60657-010		...	...	O|O	85102	...
		H60657-011		...	...	O|O	85102	...
		H60657006		...	...	O|O	85102	...
		H60657010		...	...	O|O	85102	...
		H60657011		...	...	O|O	85102	...
	Models with O.E.M. Number	3668566C1	O|O	85954	...		...	...
		3688729C1		...	...	O|O	85931	89458
		3688732C1		...	...	O|O	85931	89458
		3821760C1		...	...	O|O	85931	89458
	Models with Sleeper Cab and 12,350 lb Leaf Spring Suspension To 2014	3606857C1	O|O	85954	...		...	...
		3606857C2	O|O	85954	...		...	...
	Models with Sleeper Cab with O.E.M. Number	3737575C1	O|O	85954	...		...	...
SERIES400,500,600,700& 900-MED CABOV TRK&TRAC NISS								
	400 Models	56101 Z5008	–|O	83114	...		...	...
		56101 Z5011	–|O	G63610	...		...	...
	500 Models	56101 Z5011	–|O	G63610	...		...	...
	600, 700, 900 Models	56101 Z1030	–|O	85311	89424		...	...
		56101 Z2000	–|O	85311	89424		...	...
SERIES 1000 FORWARD CONTROL CHASSIS								
	1452, 1652 Models	472412C91	–|–	83456	89447		...	...
		586724C91	–|–	83456	89447		...	...
	1452, 1652 Models with International Air Suspension	501553C91		...	...	O|O	85003	89411
		1675455C1		...	...	O|O	85003	89411
		1690035C1		...	...	O|O	85003	89411
		2018987C1		...	...	O|O	85003	89411
		2018987C2		...	...	O|O	85003	89411
	1452, 1652 Models with MOR-RYDE Rear Suspension	548532C1		...	...	–|–	83103	...
		1663471C1		...	...	–|–	83103	...
	1654 LP Models (Low Profile Vehicle)	1660846C91		...	...	O|O	83101	...
		1660846C92		...	...	O|O	83101	...
	M1400, M1600 Models	472412C91	–|–	83456	89447		...	...
		501905C91		...	...	–|O	83301	...
		586724C91	–|–	83456	89447		...	...
SERIES 2000 - CONVENTIONAL TRUCK (SEVERE SERVICE)								
	2554, 2574, 2654, 2674 Models with International Air Suspension	501553C91		...	...	O|O	85003	89411

INTERNATIONAL (NAVISTAR) (CONT'D)

SERIES 2000 - CONVENTIONAL TRUCK (SEVERE SERVICE) (cont'd)

Year Ano Année	Model Modelo Modle	OEM #		Front Fleetline	Front GasSLX		Rear Fleetline	Rear GasSLX
	2554, 2574, 2654, 2674 Models with International Air Suspension	1675455C1		...	...	○|○	85003	89411
		1690035C1		...	...	○|○	85003	89411
		2018987C1		...	...	○|○	85003	89411
		2018987C2		...	...	○|○	85003	89411
	2554, 2574, 2654, 2674 Models with International Vari-Rate Rear Suspension	501506C91		...	...	–|○	83317	...
	All 2000 Models	472412C91	–|–	83456	89447		...	...
		2015556C1	–|○	85316	89426		...	...
	All 2000 Models With 16000 or 18000 lb Springs	1667520C1	○|○	85058	89431		...	...

SERIES 3000 - SCHOOL BUS CHASSIS

	3000, 3400 Models with 6,000 to 8,000 lb Front axle	3533356C1	○|○	83135	...		...	...
		3533356C2	○|○	83135	...		...	...
	3000, 3400 Models with 10,000 to 14,000 lb Front axle	3533357C1	○|○	85957	...		...	...
		3533357C2	○|○	85957	...		...	...
		3533357C3	○|○	85957	...		...	...
	3700, 3800 Models	472412C91	–|–	83456	89447		...	...
		501905C91		...	...	–|○	83301	...
		501906C91		...	...	–|○	83317	...
		586724C91	–|–	83456	89447		...	...
	3700, 3800 Models with International Air Suspension	501553C91		...	...	○|○	85003	89411
		1675455C1		...	...	○|○	85003	89411
		1690035C1		...	...	○|○	85003	89411
		2018987C1		...	...	○|○	85003	89411
		2018987C2		...	...	○|○	85003	89411
	3700, 3800 Models with MOR-RYDE Rear Suspension	548532C1		...	...	–|–	83103	...
	3700, 3800 Models with Neway ARD-234 Air Suspension	537524C91		...	...	○|○	83123	89405
		537525C91		...	...	○|○	83123	89405
	3900FC Models	467371C91	○|○	83225	...		...	...
		1677707C1	○|○	85030	89440		...	...
		2015557C1	○|○	85030	89440		...	...
	3900FC Models (Genesis - Front Engine)	2200327C1	–|○	85332	...		...	...
	3900FC Models (Genesis - Rear Engine)	2039549C1	–|○	85333	...		...	...

SERIES 4000 - SHORT CONVENTIONAL MEDIUM TRK & TRAC

90-02	F-4900 Models with 10000 lb Front Axle	472412C91	–|–	83456	89447		...	...
90-02	F-4900 Models with Dual Doors	2015556C1	–|○	85316	89426		...	...
	4000 Models with Hendrickson HAS-230 Rear Air Suspension	AMS650420		...	...	○|○	85013	89414
	4600, 4700, 4800, 4900 Models	586724C91	–|–	83456	89447		...	...
		1663606C91	–|–	85027	...		...	...
		1667520C1	○|○	85058	89431		...	...
	4600, 4700, 4800, 4900 Models with 10000 lb Front Axle	472412C91	–|–	83456	89447		...	...
	4600, 4700, 4800, 4900 Models with International Air Suspension (Exc. Low Profile)	501553C91		...	...	○|○	85003	89411
		1675455C1		...	...	○|○	85003	89411
		1690035C1		...	...	○|○	85003	89411
		2018987C1		...	...	○|○	85003	89411
		2018987C2		...	...	○|○	85003	89411
	4600LP, 4700LP Models (Low Profile Vehicle) U-Haul	540395C91	–|–	83613	...		...	...
		540395C92	–|–	83613	...		...	...
	4600LP, 4700LP Models (Low Profile Vehicle) with Air Suspension	1660846C91		...	...	○|○	83101	...
		1660846C92		...	...	○|○	83101	...
	F-4900 & 4600LP Models (Low Profile Vehicle)	501906C91		...	...	–|○	83317	...
		501906C92		...	...	–|○	83317	...
	F-4900 Models with Hendrickson HN - 400 Models Rear suspension	60680-003		...	...		83112	...

APPLICATION GUIDE - TRUCKS, TRAILERS AND BUSES

Year Ano Année	Model Modelo Modle	OEM #		Front			Rear	
				Fleetline	GasSLX		Fleetline	GasSLX

INTERNATIONAL (NAVISTAR) (CONT'D)

SERIES 4000 - SHORT CONVENTIONAL MEDIUM TRK & TRAC (cont'd)

	F-4900 Models with Hendrickson HN - 400 Models Rear suspension	60680-003L		...	...		83112	...
		3515265C1		...	...		83112	...
		3515265C2		...	...		83112	...
		60680003		...	...		83112	...
		60680003L		...	...		83112	...
		H60680-003		...	...		83112	...
		H60680003		...	...		83112	...

SERIES 5000, 5000I -SEVERE SERVICE CONV TRK & TRAC

	6 X 4 Models with Neway AD-246-10 Air Suspension and 60" Axle Spacing	2029200C91		...	...	O|O	83126	89430
		2029200C91		...	...	O|O	85030	89440
		AMS600172		...	...	O|O	83126	89430
		AMS600172		...	...	O|O	85030	89440

SERIES 7000 - SHORT CONV. MEDIUM TRUCK & TRACTOR

	7000 Models School Bus with O.E.M. Number	3609400C1		...	...	–|O	83317	...
		3609400C2		...	...	–|O	83317	...
	7100 Models	472412C91	–|–	83456	89447		...	...
		586724C91	–|–	83456	89447		...	...
		1663606C91	–|–	85027	...		...	...
	7100 Models with International Air Suspension	501553C91		...	...	O|O	85003	89411
		1675455C1		...	...	O|O	85003	89411
		1690035C1		...	...	O|O	85003	89411
		2018987C1		...	...	O|O	85003	89411
		2018987C2		...	...	O|O	85003	89411

SERIES 8000 - CONVENTIONAL HEAVY DUTY TRACTOR

07-08	8600 Models with Taperleaf Front Spring Suspension	3670156C1	O|O	85954	...		...	...
	8100, 8200, 8300 Models	501906C91		...	...	–|O	83317	...
		3000070C91	–|–	83456	89447		...	...
	8100, 8200, 8300 Models with 12000 - 14000 lb Suspension	1664788C2	–|O	85316	89426		...	...
		2015556C1	–|O	85316	89426		...	...
	8100, 8200, 8300 Models with 15000 - 18000 lb Suspension	1667520C1	O|O	85058	89431		...	...
	8100, 8200, 8300 Models with Hendrickson HA-230 Rear Air Suspension	AMS600102		...	...	O|O	85005	89430
	8100, 8200, 8300 Models - with Hendrickson HA-460 Air Suspension with 55" & 60" axle spacing and 40000 & 46000 lb capacity	AMS600102		...	...	O|O	85005	89430
	8100, 8200, 8300 Models with International Air Suspension (Except Lo-Profile and Carhauler)	501553C91		...	...	O|O	85003	89411
		1675455C1		...	...	O|O	85003	89411
		1690035C1		...	...	O|O	85003	89411
		2018987C1		...	...	O|O	85003	89411
		2018987C2		...	...	O|O	85003	89411
	8100LP, 8200LP & 8300LP Models - 6 X 4 & 4 X 2 Models with International Air Suspension for Lo-Profile and Carhauler	1660846C91		...	...	O|O	83101	...
		1660846C92		...	...	O|O	83101	...
	8100 Models Car Hauler	472412C91	–|–	83456	89447		...	...
		1664524C1		...	...	–|O	85935	...
	Models with Neway AD-246-10 Air Suspension and 60" Axle Spacing	2029200C91		...	...	O|O	83126	89430
		2029200C91		...	...	O|O	85030	89440
		AMS600172		...	...	O|O	83126	89430
		AMS600172		...	...	O|O	85030	89440

SERIES 9100, 9100I - TRACTOR & STRAIGHT TRUCK

	6 X 4 Models with International Air Suspension For Lo-Profile	1660846C91		...	...	O|O	83101	...

INTERNATIONAL (NAVISTAR) (CONT'D)

SERIES 9100, 9100I - TRACTOR & STRAIGHT TRUCK (cont'd)

Year Ano Année	Model Modelo Modle	OEM #		Front			Rear	
				Fleetline	GasSLX		Fleetline	GasSLX
	6 X 4 Models with International Air Suspension For Lo-Profile	1660846C92		...	...	○|○	83101	...
	6 X 4 Models with Neway AD-246-10 Air Suspension and 60" Axle Spacing	2029200C91		...	...	○|○	83126	89430
		2029200C91		...	...	○|○	85030	89440
		AMS600172		...	...	○|○	83126	89430
		AMS600172		...	...	○|○	85030	89440
	9100 Models with 12000 - 14000 lb Suspension	1664788C2	−|○	85316	89426		...	...
		2015556C1	−|○	85316	89426		...	...
		2032533C1	−|○	85316	89426		...	...
	9100 Models - with Hendrickson HA-460 Models Air Suspension	AMS600102		...	...	○|○	85005	89430
	Models with International Air Suspension (Except Lo-Profile)	2018987C1		...	...	○|○	85003	89411
		2018987C2		...	...	○|○	85003	89411

SERIES 9200, 9200I - TRACTOR & STRAIGHT TRUCK

	4 X 2 Models with International Air Suspension	2018987C1		...	...	○|○	85003	89411
		2018987C2		...	...	○|○	85003	89411
	6 X 4 Models with 12,000 to 14,000 lb Front Axles	3581109C3	○|○	85924	89457		...	...
		3581109C4	○|○	85924	89457		...	...
	6 X 4 Models with International Air Suspension	2018987C1		...	...	○|○	85003	89411
		2018987C2		...	...	○|○	85003	89411
	6 X 4 Models with International Air Suspension For Lo-Profile	1660846C91		...	...	○|○	83101	...
		1660846C92		...	...	○|○	83101	...
	6 X 4 Models with Neway AD-246-10 Air Suspension and 60" Axle Spacing	2029200C91		...	...	○|○	83126	89430
		2029200C91		...	...	○|○	85030	89440
		AMS600172		...	...	○|○	83126	89430
		AMS600172		...	...	○|○	85030	89440
	Models with 12,000 - 18,000 lb Suspension	1664788C2	−|○	85316	89426		...	...
		2015556C1	−|○	85316	89426		...	...
		2032533C1	−|○	85316	89426		...	...
	Models with Day Cab & Hendrickson AirTek Suspension	65992-002	○|○	85955	...		...	...
		65992-002L	○|○	85955	...		...	...
		3613984C1	○|○	85955	...		...	...
		3660549C1	○|○	85955	...		...	...
		65992002	○|○	85955	...		...	...
		65992002L	○|○	85955	...		...	...
	Models with Hendrickson HA-460 Models Air Suspension	AMS600102		...	...	○|○	85005	89430
	Models with IAS Suspension w/ 9.25" or 9.5" Ride Height	3573265C1		...	...	○|○	85931	89458
	Models with International Air Suspension	501553C91		...	...	○|○	85003	89411
		1675455C1		...	...	○|○	85003	89411
		1690035C1		...	...	○|○	85003	89411
	Models with Sleeper Cab & Hendrickson AirTek Suspension	65992-001	○|○	85955	...		...	...
		3609178C1	○|○	85955	...		...	...
		3660548C1	○|○	85955	...		...	...
		65992001	○|○	85955	...		...	...

SERIES 9300, 9300I, 9400 & 9400I LONG HOOD CONV.

	6 X 4 Models with International Air Suspension Exc. Lo-Profile	2018987C1		...	...	○|○	85003	89411
		2018987C2		...	...	○|○	85003	89411
	6 X 4 Models with International Air Suspension For Lo-Profile	1660846C91		...	...	○|○	83101	...
		1660846C92		...	...	○|○	83101	...
	6 X 4 Models with Neway AD-246-10 Air Suspension and 60" Axle Spacing	2029200C91		...	...	○|○	83126	89430
		2029200C91		...	...	○|○	85030	89440
		AMS600172		...	...	○|○	83126	89430
		AMS600172		...	...	○|○	85030	89440
	Models with 10,800 lb Suspension	503610C2	○|○	83207	89407		...	...

Year Ano Année	Model Modelo Modle	OEM #		Front			Rear	
				Fleetline	GasSLX		Fleetline	GasSLX
INTERNATIONAL (NAVISTAR) (CONT'D)								
SERIES 9300, 9300I, 9400 & 9400I LONG HOOD CONV. (cont'd)								
	Models with 12,000 - 14,000 lb Suspension	1664788C2	−|O	**85316**	**89426**		...	...
		2015556C1	−|O	**85316**	**89426**		...	...
		2032533C1	−|O	**85316**	**89426**		...	...
	Models with 16,000 - 18,000 lb Suspension	1667520C1	O|O	**85058**	**89431**		...	...
	Models with Day Cab & Hendrickson AirTek Suspension	65992-002	O|O	**85955**	...		...	...
		65992-002L	O|O	**85955**	...		...	...
		3613984C1	O|O	**85955**	...		...	...
		3660549C1	O|O	**85955**	...		...	...
		65992002	O|O	**85955**	...		...	...
		65992002L	O|O	**85955**	...		...	...
	Models with Hendrickson HA-460 Models Air Suspension	AMS600102		...	...	O|O	**85005**	**89430**
	Models with IAS Suspension w/ 9.25" or 9.5" Ride Height	3573265C1		...	...	O|O	**85931**	**89458**
	Models with International Air Suspension	501553C91		...	...	O|O	**85003**	**89411**
		1675455C1		...	...	O|O	**85003**	**89411**
		1690035C1		...	...	O|O	**85003**	**89411**
	Models with Neway ARD-125/244 Air Suspension	790335C91		...	...	O|O	**83209**	**89414**
	Models with O.E.M Number	3571713C1	−|O	**85333**	...		...	...
	Models with Sleeper Cab & Hendrickson AirTek Suspension	65992-001	O|O	**85955**	...		...	...
		3609178C1	O|O	**85955**	...		...	...
		3660548C1	O|O	**85955**	...		...	...
		65992001	O|O	**85955**	...		...	...
	Set Back Axle Models with 16,000 lb to 18,000 lb Suspension	1664149C1	O|O	**85029**	...		...	...
	Set Foreward Axle Models with 16,000 lb to 18,000 lb Suspension	507202C1	O|O	**85030**	**89440**		...	...
SERIES 9600 & 9700 PREMIUM CABOVER TRACTOR								
	9600, 9700 Models	507202C1	O|O	**85030**	**89440**		...	...
	9600, 9700 Models Except Low Profile	1664788C2	−|O	**85316**	**89426**		...	...
		2015556C1	−|O	**85316**	**89426**		...	...
	9600, 9700 Models for Low Profile	503610C2	O|O	**83207**	**89407**		...	...
	9600, 9700 Models with 16000 - 18000 lb Suspension	1667520C1	O|O	**85058**	**89431**		...	...
	9600, 9700 Models with Hendrickson HA-460 Air Suspension with 55" or 60" axle spacing and 40000 or 46000 lb capacity	AMS600102		...	...	O|O	**85005**	**89430**
	9600, 9700 Models with International STL Spring Suspension	503550C1		...	...	O|O	**83207**	**89407**
	9600, 9700 Models with Neway ARD-125/244 Air Suspension	790335C91		...	...	O|O	**83209**	**89414**
	9600, 9700 Models with Neway ARD-234 Air Suspension	537524C91		...	...	O|O	**83123**	**89405**
	Models with International Air Suspension	501553C91		...	...	O|O	**85003**	**89411**
		1675455C1		...	...	O|O	**85003**	**89411**
		1690035C1		...	...	O|O	**85003**	**89411**
		2018987C1		...	...	O|O	**85003**	**89411**
		2018987C2		...	...	O|O	**85003**	**89411**
SERIES 9800 - PREMIUM CABOVER TRACTOR								
	6 X 4 Models with International Air Suspension	2018987C1		...	...	O|O	**85003**	**89411**
		2018987C2		...	...	O|O	**85003**	**89411**
	6 X 4 Models with Neway AD-246-10 Air Suspension and 60" Axle Spacing	2029200C91		...	...	O|O	**83126**	**89430**
		2029200C91		...	...	O|O	**85030**	**89440**
		AMS600172		...	...	O|O	**83126**	**89430**
		AMS600172		...	...	O|O	**85030**	**89440**
	9800 Models - with Hendrickson HA-460 Air Suspension with 55" & 60" axle spacing and 40000 & 46000 lb capacity	AMS600102		...	...	O|O	**85005**	**89430**
	9800 Models - with Hendrickson HAS-402-60 Air Suspension	AMS650420		...	...	O|O	**85013**	**89414**
	9800 Models - with Set Back axle	2015556C1	−|O	**85316**	**89426**		...	...
	9800 Models - with Set Forward axle	503610C2	O|O	**83207**	**89407**		...	...
SERIES 9900, 9900I, 9900IX LONG HOOD CONV. TRUCK								
10-11	Models with 40,000 lb Rear Air Suspension	3586883C1		...	...	O|O	**85931**	**89458**

Year Ano Année	Model Modelo Modle	OEM #		Front			Rear	
				Fleetline	GasSLX		Fleetline	GasSLX

INTERNATIONAL (NAVISTAR) (CONT'D)

SERIES 9900, 9900I, 9900IX LONG HOOD CONV. TRUCK (cont'd)

	6 X 4 Models with International Air Suspension Exc. Lo-Profile	2018987C1		...	...	○|○	85003	89411
		2018987C2		...	...	○|○	85003	89411
	6 X 4 Models with International Air Suspension For Lo-Profile	1660846C91		...	...	○|○	83101	...
		1660846C92		...	...	○|○	83101	...
	6 X 4 Models with Neway AD-246-10 Air Suspension and 60" Axle Spacing	2029200C91		...	...	○|○	83126	89430
		2029200C91		...	...	○|○	85030	89440
		AMS600172		...	...	○|○	83126	89430
		AMS600172		...	...	○|○	85030	89440
	Day Cab Models with 12,000 lb Front Axles To 2011	3581106C1	○|○	85924	89457		...	...
		3581106C2	○|○	85924	89457		...	...
		3581106C3	○|○	85924	89457		...	...
	Models with 10,800 lb - 14,600 lb Suspension	503610C2	○|○	83207	89407		...	...
	Models with 12,000 - 14,000 lb Suspension	1664788C2	–|○	85316	89426		...	...
		2015556C1	–|○	85316	89426		...	...
		2032533C1	–|○	85316	89426		...	...
	Models with 12,000 to 14,600 lb Taperleaf Front Spring Suspension	3983162C1	○|○	85639	...		...	...
		3983162C2	○|○	85639	...		...	...
		4212942C1	○|○	85639	...		...	...
		4213758C1	○|○	85639	...		...	...
	Models with 16,000 - 18,000 lb Suspension	1667520C1	○|○	85058	89431		...	...
	Models with International 40,000 lb Rear Air Suspension (52" Spacing- Heavy Duty Rear) To 2016	3688616C1		...	...	○|○	85923	89458
	Models with International Air Suspension	501553C91		...	...	○|○	85003	89411
		1675455C1		...	...	○|○	85003	89411
		1690035C1		...	...	○|○	85003	89411
	Models with Neway ARD-125/244 Air Suspension	790335C91		...	...	○|○	83209	89414
	Models with O.E.M Number	3571713C1	–|○	85333	...		...	...
	Set Back Axle Models with 16,000 lb to 18,000 lb Suspension	1664149C1	○|○	85029	...		...	...
	Set Foreward Axle Models with 16,000 lb to 18,000 lb Suspension	507202C1	○|○	85030	89440		...	...

S SERIES SCHOOL BUS

	173 FC, 183 FC, 183RE, 193 RE, 1853 FC & 1853 DFC	204994R91	○|○	83225	...		...	...
		308648C91	○|○	83225	...		...	...
		453561C91	○|○	83225	...		...	...
		453565C91	○|○	83225	...		...	...
		467371C91	○|○	83225	...		...	...
	173 FC & 183 FC - Exc. Axle Codes 14149 & 14189	210918R91		...	...	○|○	83215	...
		453574C91		...	...	○|○	85307	...
	173 FC & 183 FC with Axle Codes 14149 & 14189	210535R91		...	...	○|○	83225	...
		453568C91		...	...	○|○	83225	...
		467372C91		...	...	○|○	83225	...
	183 RE Models with Axle Codes 14043, 14147 & 14186	210533R91		...	...	○|○	83225	...
		210534R92		...	...	○|○	83225	...
		453562C91		...	...	○|○	83225	...
		467371C91		...	...	○|○	83225	...
	193 RE Models	210920R91	○|○	85308	89422		...	...
		453579C91	○|○	85308	89422		...	...
	193 RE Models - Exc. Axle Codes 14039 & 14189	210533R91		...	...	○|○	83225	...
		210534R92		...	...	○|○	83225	...
		453562C91		...	...	○|○	83225	...
		467371C91		...	...	○|○	83225	...
	1603, 1703, 1803 & 1853	206620R91		...	...	○|○	83216	...
		206621R91		...	...	○|○	83216	...
		306444C91		...	...	○|○	85012	89413

INTERNATIONAL (NAVISTAR) (CONT'D)

S SERIES SCHOOL BUS (cont'd)

Year Ano Année	Model Modelo Modle	OEM #		Front Fleetline	Front GasSLX		Rear Fleetline	Rear GasSLX
	1603, 1703, 1803 & 1853	308649C91		...	...	O|O	83216	...
		308650C92		...	...	O|O	83216	...
		329316C92		...	...	O|O	85012	89413
		383379C91		...	...	O|O	83308	...
		453564C91		...	...	O|O	85012	89413
		453567C91		...	...	O|O	83216	...
		453570C91		...	...	O|O	83216	...
		453575C91		...	...	O|O	83308	...
		467983C91		...	...	O|O	85012	89413
		471201C91	O|O	85012	89413		...	...
		471203C91		...	...	O|O	83308	...
		474002C91		...	...	O|O	83308	...
		873622C91		...	...	O|O	83308	...
	1603, 1703, 1803 & 1853 - Exc. Axle Codes 02054, 02057, 02059, 02089, 02091, 02098, 02101, 02109, 02139, 02208, 02218, 02228, 02309, 02329, 02339	308668C92	O|O	85012	89413		...	...
		453556C91	O|O	85012	89413		...	...
		467985C91	O|O	85012	89413		...	...
		874695R91	O|O	85012	89413		...	...
	1603, 1703, 1803 & 1853 with 9000, 10800 or 12000 lb Front Axle	320444C91	O|O	85012	89413		...	...
		329316C92	O|O	85012	89413		...	...
		453564C91	O|O	85012	89413		...	...
		467983C91	O|O	85012	89413		...	...
	1603, 1703, 1803 & 1853 with Axle Codes 02089, 02091	206620R91	O|O	83216	...		...	...
		308649C91	O|O	83216	...		...	...
		453567C91	O|O	83216	...		...	...
		467984C91	O|O	83216	...		...	...
	1723, 1823, 1853 Models with International Air Suspension	501553C91		...	...	O|O	85003	89411
		1675455C1		...	...	O|O	85003	89411
		1690035C1		...	...	O|O	85003	89411
		2018987C1		...	...	O|O	85003	89411
		2018987C2		...	...	O|O	85003	89411
	1723, 1823, 1853 Models with Neway ARD-234 Air Suspension	537524C91		...	...	O|O	83123	89405
	1723 S Models with 5000, 6000 or 7500 lb Front Axle	472367C91	–|–	83318	...		...	...
	1823, 1853 S Models with 9000, 10800 or 12000 lb Front Axle	472411C91	–|–	83456	89447		...	...
		472412C91	–|–	83456	89447		...	...
		586724C91	–|–	83456	89447		...	...
	1823 S Models - Exc. with Rear Axle Codes 14029,14030, 14187	501906C91		...	...	–|O	83317	...
	1853 DFC3	210920R91	O|O	85308	89422		...	...
		453579C91	O|O	85308	89422		...	...
	1853 FC & 1853 DFC with Axle Code 14136	210919R91		...	...	O|O	85307	...
		308664C91		...	...	O|O	85307	...
		453574C91		...	...	O|O	85307	...
	1853 FC & 1853 DFC with Axle Code 14149 with FD Serial Numbers	453567C91		...	...	O|O	83216	...
	1853 FC & 1853 DFC with Axle Codes 14039, 14139, 14149 & 14189 - Exc. 14149 with FD Serial Numbers	210533R91		...	...	O|O	83225	...
		210534R92		...	...	O|O	83225	...
		453562C91		...	...	O|O	83225	...
		467371C91		...	...	O|O	83225	...
	1853 FC & 1853 DFC with Axle Codes 14044, 14045, 14060, 14145, 14146, 14150 and 14186	208664C91		...	...	O|O	85307	...
		210919R91		...	...	O|O	85307	...
		453574C91		...	...	O|O	85307	...
	RE Models	3604282C1	–|O	85351	...		...	...

TERRASTAR

	Models with International IROS Air Suspension	3892445C3		...	...	O|O	85931	89458

APPLICATION GUIDE - TRUCKS, TRAILERS AND BUSES

Year Ano Année	Model Modelo Modle	OEM #		Front			Rear	
				Fleetline	GasSLX		Fleetline	GasSLX
INTERNATIONAL (NAVISTAR) (CONT'D)								
TRANSTAR - 8500, 8600 SERIES								
10-15	Models with 10,000 to 14,000 lb Front axle	3533357C1	O|O	**85957**	...		...	...
		3533357C2	O|O	**85957**	...		...	...
		3588209C1	O|O	**85957**	...		...	...
		3588209C2	O|O	**85957**	...		...	...
10-18	Models with 40,000 lb Rear Air Suspension	3549099C1		...	...	O|O	**85923**	**89458**
		3549099C2		...	...	O|O	**85923**	**89458**
		3549099C3		...	...	O|O	**85923**	**89458**
	Models with O.E.M. Number	6127690C1		...	...	O|O	**85923**	**89458**
	Models with O.E.M. Number To 2013	3674348C1	O|O	**85954**	...		...	...
TRANSTAR - CONVENTIONAL								
	4170, F-4170, 4200, F-4200, 4300 & F-4300 Models	426744R91	O|O	**85303**	**89422**		...	...
		426744R92	O|O	**85303**	**89422**		...	...
		453576C91	O|O	**85303**	**89422**		...	...
		453576C92	O|O	**85303**	**89422**		...	...
		477132C1	O|O	**85303**	**89422**		...	...
	4170, F-4170, 4200, F-4200, 4300 & F-4300 with Air Ride Suspension	350425C1		...	...	O|O	**85300**	**89419**
		462557C91		...	...	O|O	**85300**	**89419**
	D-400, DF-400, DC-400, DCF-400 & DCF-400M - Exc. Axle Code 02136	426744R91	O|O	**85303**	**89422**		...	...
		426744R92	O|O	**85303**	**89422**		...	...
		453576C91	O|O	**85303**	**89422**		...	...
	D-400, DF-400, DC-400, DCF-400 & DCF-400M with Axle Code 02136	293009C91	O|O	**85308**	**89422**		...	...
		453577C91	O|O	**85308**	**89422**		...	...
UNISTAR								
	Additional O.E.M. Interchanges	56101 Z5008	–|O	**83114**	...		...	...
		596329C1	O|O	**85014**				
	CO7044A	426744R91	O|O	**85303**	**89422**		...	...
		426744R92	O|O	**85303**	**89422**		...	...
		453576C91	O|O	**85303**	**89422**		...	...
WORKSTAR - 7000 SERIES								
10-14	Models with Hendrickson HMX 400/460 Haulmax with 16.5" Saddle	60680-004		...	...		**83143**	...
		60680-004L		...	...		**83143**	...
		60680004		...	...		**83143**	...
		60680004L		...	...		**83143**	...
10-15	7300 Models with 12,000 lb Front Axles	3576464C1	O|O	**85957**	...		...	...
		3576464C2	O|O	**85957**	...		...	...
10-16	7400, 7500, 7600 Models with 12,000 lb Front axle	3533357C1	O|O	**85957**	...		...	...
		3533357C2	O|O	**85957**	...		...	...
		3533357C3	O|O	**85957**	...		...	...
10-19	7400 Models with O.E.M. Number	3885832C1	O|O	**83135**	...		...	...
		3885832C2	O|O	**83135**	...		...	...
16-19	7300, 7400, 7500, 7600 Models with 12,000 lb Front axle	6127714C1	O|O	**85928**	...		...	...
19-21	Models with 10,000 - 12,000 lb Taperleaf Spring Suspension	4164156C1	O|O	**85924**	**89457**		...	...
	7400, 7500, 7600 Models with 16,000 lb to 20,000 lb Multi-leaf Spring	3541456C1	O|O	**85929**	...		...	...
		3558089C1	O|O	**85925**	...		...	...
		3558089C2	O|O	**85925**	...		...	...
		3558089C3	O|O	**85925**	...		...	...
	7400, 7500, 7600 Models with 18,000 lb Front Axles To 2018	3576464C1	O|O	**85957**	...		...	...
		3576464C2	O|O	**85957**	...		...	...
	7400, 7500, 7600 Models with Hendrickson HAS - 400 (Standard Inboard Rear)	60670-007		...	...	O|O	**83144**	...
		60670-007L		...	...	O|O	**83144**	...
		60670007		...	...	O|O	**83144**	...

Year Ano Année	Model Modelo Modle	OEM #		Front			Rear	
				Fleetline	GasSLX		Fleetline	GasSLX
INTERNATIONAL (NAVISTAR) (CONT'D)								
WORKSTAR - 7000 SERIES (cont'd)								
	7400, 7500, 7600 Models with Hendrickson HAS - 400 (Standard Inboard Rear)	60670007L		...	...	O|O	83144	...
	7500 Models with 14,000 lb Front axle	3596878C2	O|O	85648	...		...	...
		4070352C1	O|O	85648	...		...	...
	7600 Models with Hendrickson HN - 400 Models Rear suspension	60680-003		...	...		83112	...
		60680-003L		...	...		83112	...
		3515265C1		...	...		83112	...
		3515265C2		...	...		83112	...
		60680003		...	...		83112	...
		60680003L		...	...		83112	...
		H60680-003		...	...		83112	...
		H60680003		...	...		83112	...
	Models with 10,000 to 16,000 lb Front Suspension	3576465C1	O|O	85929	...		...	...
		3576465C2	O|O	85929	...		...	...
		3816234C1	O|O	85929	...		...	...
	Models with 40,000 lb Rear Air Suspension To 2018	3549099C3		...	...	O|O	85923	89458
	Models with Hendrickson Primaax 230, 460 and 690 Air Suspension (8-1/2" to 10" Ride Height) To 2018	60657-003		...	...	O|O	85072	...
		60657-003L		...	...	O|O	85072	...
		60657003		...	...	O|O	85072	...
		60657003L		...	...	O|O	85072	...
	Models with Hendrickson Primaax EX 232, 462 and 692 Air Suspension (8-1/2" to 10" Ride Height) To 2018	60657-003		...	...	O|O	85072	...
		60657-003L		...	...	O|O	85072	...
		60657003		...	...	O|O	85072	...
		60657003L		...	...	O|O	85072	...
	Models with O.E.M. Number	4070336C1	O|O	85058	89431		...	...
		6127690C1		...	...	O|O	85923	89458
INTERNATIONAL (NAVISTAR) CAB SHOCKS								
4000 SERIES								
	4600, 4700, 4800, 4900 Models with Link Cab Suspension	2012769C2	–|–	83005				
8000 SERIES								
	8100, 8200, & 8300 Model Trucks with Link Cabmate with O.E.M. Number	1201-1213	–|–	83005				
		12011213	–|–	83005				
	8100, 8200, & 8300 Model Trucks with O.E.M. Number	2012768C1		83013				
		2012769C1	–|–	83005				
		2025790C1		83013				
9000 SERIES								
	9200 Models with O.E. Number	2023684C1	–|–	83015				
	Models with Link Cabmate Suspensions with O.E.M. Number	1202-1212		83013				
		1202-1213	–|–	83005				
		12021212		83013				
		12021213	–|–	83005				
	Models with O.E.M. Number	1201-1212		83013				
		2023685C1	–|–	83015				
		2500013C1		83013				
		12011212		83013				
ISUZU								
ADDITIONAL APPLICATIONS								
1985	KS22 Models (All)	8-97083-027-0	–|O	83515	...		...	...

ISUZU (CONT'D)

ADDITIONAL APPLICATIONS (cont'd)

Year Ano Année	Model Modelo Modle	OEM #		Front Fleetline	Front GasSLX		Rear Fleetline	Rear GasSLX
1985	KS22 Models (All)	9-51630-666-0		...	...	O|O	85012	89413
		9-51630-666-2		...	...	O|O	85012	89413
		9516306660		...	...	O|O	85012	89413
		9516306662		...	...	O|O	85012	89413

ALL MODELS WITH

	Models with O.E.M. Number	8-97253-616-0	–|O	83515	...		...	...
		8-97253-621-0	–|O	83515	...		...	...
		8-97253-623-0	–|O	83515	...		...	...
		898098-1250	–|O	83515	...		...	...
		898098-1270	–|O	83515	...		...	...
		8972019600	–|O	83515	...		...	...
		8972536160	–|O	83515	...		...	...
		8972536210	–|O	83515	...		...	...
		8972536230	–|O	83515	...		...	...
		8980981250	–|O	83515	...		...	...
		8980981270	–|O	83515	...		...	...

EVR

87-93	EVR Models	1-51630-160-0	–|O	83162	...		...	...
		1516301600	–|O	83162	...		...	...

FRR

95-03	...	1-51630-219-0	–|O	83114	...		...	...
		1-51630-219-1	–|O	83114	...		...	...
		51630219	–|O	83114	...		...	...

FSR

97-02	Models with 15000, 19000, 21000 lb Multileaf Springs	8-22064232-0		...	...	–|–	85071	...
		8220642320		...	...	–|–	85071	...
97-02	Models with 19000, 21000, 23000 lb Taperleaf Springs (EXC Low Profile Veh.)	8-22064233-0		...	...	–|–	83136	...
		8220642330		...	...	–|–	83136	...
97-02	Models with FL1 Tilt Cab with 8100 lb Axle (Including Low Profile)	8-22064804-0	–|–	83136	...		...	...
		8-22064805-0	–|–	83136	...		...	...
		8220648040	–|–	83136	...		...	...
		8220648050	–|–	83136	...		...	...
86-92	FSR Models	1-51630-160-0	–|O	83162	...		...	...
		1-51630-168-1	–|O	83515	...		...	...
		51630168	–|O	83515	...		...	...
		1516301600	–|O	83162	...		...	...
87-92	FSR Models	1516301681	–|O	83515	...		...	...
86-96	FSR Models	1-51630-217-1	–|O	83114	...		...	...
87-96	FSR Models	1-51630-167-0		...	...	–|–	83613	...
		1516301670		...	...	–|–	83613	...
1986	...	1516301681	–|O	83515	...		...	...

FTR

05-09	Models with O.E.M. Number	8-98098-059-0		...	...	O|O	83159	...
		8-98098-059-1		...	...	O|O	83159	...
		8-98098-127-0	–|O	83515	...		...	...
		8-98316-228-0		...	...	O|O	83159	...
		98098059		...	...	O|O	83159	...
		98098127	–|O	83515	...		...	...
		8980980590		...	...	O|O	83159	...
		8980980591		...	...	O|O	83159	...

Year Ano Année	Model Modelo Modle	OEM #		Front			Rear	
				Fleetline	GasSLX		Fleetline	GasSLX
ISUZU (CONT'D)								
FTR (cont'd)								
05-09	Models with O.E.M. Number	8980981270	−|○	**83515**	...		...	...
		8982326720	−|○	**83515**	...		...	...
		8983162280		...	...	○|○	**83159**	...
90-09	Models with 15000, 19000, 21000 lb Multileaf Springs	8-22064232-0		...	...	−|−	**85071**	...
		15174902		...	...	−|−	**85071**	...
		88982686		...	...	−|−	**85071**	...
		8220642320		...	...	−|−	**85071**	...
90-09	Models with O.E.M. Number	88982682	−|−	**83136**	...		...	...
97-09	Models with 19000, 21000, 23000 lb Taperleaf Springs (EXC Low Profile Veh.)	8-22064233-0		...	...	−|−	**83136**	...
		8220642330		...	...	−|−	**83136**	...
97-09	Models with O.E.M. Number	8-22064-806-0	−|−	**83136**	...		...	...
		8-22064-807-0	−|−	**83136**	...		...	...
		15123676	−|−	**83136**	...		...	...
		8220648060	−|−	**83136**	...		...	...
		8220648070	−|−	**83136**	...		...	...
00-11	Models with Hendrickson HAS suspension	8-97517-966-0		...	...	○|○	**83137**	...
		8-97517-966-1		...	...	○|○	**83137**	...
		60670-005		...	...	○|○	**83137**	...
		60670-005L		...	...	○|○	**83137**	...
		60670005		...	...	○|○	**83137**	...
		60670005L		...	...	○|○	**83137**	...
		8975179660		...	...	○|○	**83137**	...
		8975179661		...	...	○|○	**83137**	...
18-20	FTR Diesel Models with Std Cab	8-98321-912-1	−|−	**85071**	...		...	...
		8983219121	−|−	**85071**	...		...	...
18-22	Models with Hendrickson HAS suspension	8-97517-966-0		...	...	○|○	**83137**	...
		8-97517-966-1		...	...	○|○	**83137**	...
		60670-005		...	...	○|○	**83137**	...
		60670-005L		...	...	○|○	**83137**	...
		60670005		...	...	○|○	**83137**	...
		60670005L		...	...	○|○	**83137**	...
		8975179660		...	...	○|○	**83137**	...
		8975179661		...	...	○|○	**83137**	...
88-96	Models with O.E.M. Number	1-51630-167-0		...	...	−|−	**83613**	...
		1516301670		...	...	−|−	**83613**	...
FVR								
94-09	Models with 15000, 19000, 21000 lb Multileaf Springs	8-22064232-0		...	...	−|−	**85071**	...
		88982686		...	...	−|−	**85071**	...
		8220642320		...	...	−|−	**85071**	...
97-09	Models with 19000, 21000, 23000 lb Taperleaf Springs (EXC Low Profile Veh.)	8-22064233-0		...	...	−|−	**83136**	...
		8220642330		...	...	−|−	**83136**	...
97-09	Models with O.E.M. Number	8-22064-806-0	−|−	**83136**	...		...	...
		8-22064-807-0	−|−	**83136**	...		...	...
		15887728	−|−	**83136**	...		...	...
		19152843	−|−	**83136**	...		...	...
		88982682	−|−	**83136**	...		...	...
		8220648060	−|−	**83136**	...		...	...
		8220648070	−|−	**83136**	...		...	...
00-11	Models with Hendrickson HAS suspension	8-97517-966-0		...	...	○|○	**83137**	...
		8-97517-966-1		...	...	○|○	**83137**	...
		60670-005		...	...	○|○	**83137**	...
		60670-005L		...	...	○|○	**83137**	...
		60670005		...	...	○|○	**83137**	...

APPLICATION GUIDE - TRUCKS, TRAILERS AND BUSES

Year Ano Année	Model Modelo Modle	OEM #		Front			Rear	
				Fleetline	GasSLX		Fleetline	GasSLX
ISUZU (CONT'D)								
FVR (cont'd)								
00-11	Models with Hendrickson HAS suspension	60670005L		...	...	○|○	83137	...
		8975179660		...	...	○|○	83137	...
		8975179661		...	...	○|○	83137	...
88-92	FVR Short & Middle Chassis	1-51630-160-0	−|○	83162	...		...	...
		1516301600	−|○	83162	...		...	...
88-92	Models with O.E.M. Number	1-51630-167-0		...	...	−|−	83613	...
		1516301670		...	...	−|−	83613	...
90-92	Models with 15000, 19000, 21000 lb Multileaf Springs	8-22064232-0		...	...	−|−	85071	...
		88982686		...	...	−|−	85071	...
		8220642320		...	...	−|−	85071	...
94-96	FVR Short & Middle Chassis	1-51630-160-0	−|○	83162	...		...	...
		1516301600	−|○	83162	...		...	...
94-96	Models with O.E.M. Number	1-51630-167-0		...	...	−|−	83613	...
		1516301670		...	...	−|−	83613	...
FVR SERIES								
	Models with Hendrickson HAS suspension	12474915		...	...	○|○	83122	89406
	Models with O.E.M. Number	8-22064-233-0	−|−	83136	...		...	...
		8-22064-804-0	−|−	83136	...		...	...
		8-22064-805-0	−|−	83136	...		...	...
		8-22064-806-0	−|−	83136	...		...	...
		8-22064-807-0	−|−	83136	...		...	...
		8220642330	−|−	83136	...		...	...
		8220648040	−|−	83136	...		...	...
		8220648050	−|−	83136	...		...	...
		8220648060	−|−	83136	...		...	...
		8220648070	−|−	83136	...		...	...
NPR								
95-02	...	8-97253-664-0		...	...	○|○	83159	...
		97253664		...	...	○|○	83159	...
01-08	...	8-97253-651-2		...	...	○|○	83159	...
		97253651		...	...	○|○	83159	...
03-17	Models with O.E.M. Number	97253665		...	...	○|○	83159	...
		98098058		...	...	○|○	83159	...
		98098059		...	...	○|○	83159	...
		98316227		...	...	○|○	83159	...
03-18	Models with O.E.M. Number	8-97253-665-0		...	...	○|○	83159	...
		8-98098-058-0		...	...	○|○	83159	...
		8-98098-058-1		...	...	○|○	83159	...
		8-98098-059-0		...	...	○|○	83159	...
		8-98098-059-1		...	...	○|○	83159	...
		8-98316-228-0		...	...	○|○	83159	...
		8-98316227-0		...	...	○|○	83159	...
		898098-0581		...	...	○|○	83159	...
84-23	Models with O.E.M. Number	8-94454-647-1	−|○	83515	...		...	...
		8-94454-986-0	−|○	83515	...		...	...
		8-94454-987-0	−|○	83515	...		...	...
		8-97083-027-0	−|○	83515	...		...	...
		8-97083-029-0	−|○	83515	...		...	...
		8-97253-620-0	−|○	83515	...		...	...
		8-97253-620-1	−|○	83515	...		...	...
		8-98098-125-0	−|○	83515	...		...	...
		8-98381-010-0	−|○	83515	...		...	...

APPLICATION GUIDE - TRUCKS, TRAILERS AND BUSES

Year Ano Année	Model Modelo Modle	OEM #		Front			Rear	
				Fleetline	GasSLX		Fleetline	GasSLX
ISUZU (CONT'D)								
NPR (cont'd)								
84-23	Models with O.E.M. Number	8-98381-012-0	−|O	**83515**	...		...	...
		8-98232671-0	−|O	**83515**	...		...	...
		8-98232671-1	−|O	**83515**	...		...	...
		9-51630-647-1	−|O	**83515**	...		...	...
		51630647	−|O	**83515**	...		...	...
		94454986	−|O	**83515**	...		...	...
		94454987	−|O	**83515**	...		...	...
		97083027	−|O	**83515**	...		...	...
		97083029	−|O	**83515**	...		...	...
		97253620	−|O	**83515**	...		...	...
		98098125	−|O	**83515**	...		...	...
		98232671	−|O	**83515**	...		...	...
		8982326710	−|O	**83515**	...		...	...
		8983810100	−|O	**83515**	...		...	...
		8983810120	−|O	**83515**	...		...	...
86-95	...	9-51630-666-0		...	...	O|O	**85012**	**89413**
		9-51630-666-2		...	...	O|O	**85012**	**89413**
		51630666		...	...	O|O	**85012**	**89413**
		9516306660		...	...	O|O	**85012**	**89413**
		9516306662		...	...	O|O	**85012**	**89413**
2019	Models with O.E.M Number	8-97253-665-0		...	...	O|O	**83159**	...
		8-98098-058-0		...	...	O|O	**83159**	...
		8-98098-058-1		...	...	O|O	**83159**	...
		8-98098-059-0		...	...	O|O	**83159**	...
		8-98098-059-1		...	...	O|O	**83159**	...
		8-98316-228-0		...	...	O|O	**83159**	...
		8-98316227-0		...	...	O|O	**83159**	...
		898098-0581		...	...	O|O	**83159**	...
NPR-HD								
03-17	Models with O.E.M. Number	97253665		...	...	O|O	**83159**	...
		98098058		...	...	O|O	**83159**	...
		98098059		...	...	O|O	**83159**	...
		98316227		...	...	O|O	**83159**	...
03-19	Models with O.E.M. Number	8-97253-665-0		...	...	O|O	**83159**	...
		8-98098-058-0		...	...	O|O	**83159**	...
		8-98098-058-1		...	...	O|O	**83159**	...
		8-98098-059-0		...	...	O|O	**83159**	...
		8-98098-059-1		...	...	O|O	**83159**	...
		8-98316-228-0		...	...	O|O	**83159**	...
		8-98316227-0		...	...	O|O	**83159**	...
		898098-0581		...	...	O|O	**83159**	...
20-23	Models with 14,000 to 15,000 lb Rear	8-98380-746-0		...	...	O|O	**83159**	...
		8983807460		...	...	O|O	**83159**	...
20-23	Models with 15,000 to 16,000 lb Rear	8-98380-747-0		...	...	O|O	**83159**	...
		8983807470		...	...	O|O	**83159**	...
99-23	Models with O.E.M. Number	8-94454-647-1	−|O	**83515**	...		...	...
		8-94454-986-0	−|O	**83515**	...		...	...
		8-94454-987-0	−|O	**83515**	...		...	...
		8-97083-027-0	−|O	**83515**	...		...	...
		8-97083-029-0	−|O	**83515**	...		...	...
		8-97253-620-0	−|O	**83515**	...		...	...
		8-97253-620-1	−|O	**83515**	...		...	...
		8-98098-125-0	−|O	**83515**	...		...	...

APPLICATION GUIDE - TRUCKS, TRAILERS AND BUSES

Year Ano Année	Model Modelo Modle	OEM #		Front			Rear	
				Fleetline	GasSLX		Fleetline	GasSLX
ISUZU (CONT'D)								
NPR-HD (cont'd)								
99-23	Models with O.E.M. Number	8-98381-010-0	−|○	**83515**	...		...	...
		8-98381-012-0	−|○	**83515**	...		...	...
		8-98232671-0	−|○	**83515**	...		...	...
		8-98232671-1	−|○	**83515**	...		...	...
		9-51630-647-1	−|○	**83515**	...		...	...
		51630647	−|○	**83515**	...		...	...
		94454986	−|○	**83515**	...		...	...
		94454987	−|○	**83515**	...		...	...
		97083027	−|○	**83515**	...		...	...
		97083029	−|○	**83515**	...		...	...
		97253620	−|○	**83515**	...		...	...
		98098125	−|○	**83515**	...		...	...
		98232671	−|○	**83515**	...		...	...
		8982326710	−|○	**83515**	...		...	...
		8983810100	−|○	**83515**	...		...	...
		8983810120	−|○	**83515**	...		...	...
NQR								
03-19	Models with O.E.M. Number	8-97253-665-0		...	...	○|○	**83159**	...
		8-98098-059-0		...	...	○|○	**83159**	...
		8-98098-059-1		...	...	○|○	**83159**	...
		8-98316-228-0		...	...	○|○	**83159**	...
		8-98343986-0		...	...	○|○	**83159**	...
		97253665		...	...	○|○	**83159**	...
		98098059		...	...	○|○	**83159**	...
		98343986		...	...	○|○	**83159**	...
20-22	Models with 15,000 to 16,000 lb Rear	8-98380-747-0		...	...	○|○	**83159**	...
		8983807470		...	...	○|○	**83159**	...
94-22	Models with O.E.M. Number	8-94454-647-1	−|○	**83515**	...		...	...
		8-94454-986-0	−|○	**83515**	...		...	...
		8-94454-987-0	−|○	**83515**	...		...	...
		8-97083-027-0	−|○	**83515**	...		...	...
		8-97083-029-0	−|○	**83515**	...		...	...
		8-97253-620-0	−|○	**83515**	...		...	...
		8-97253-620-1	−|○	**83515**	...		...	...
		8-98098-125-0	−|○	**83515**	...		...	...
		8-98381-010-0	−|○	**83515**	...		...	...
		8-98381-012-0	−|○	**83515**	...		...	...
		8-98232671-0	−|○	**83515**	...		...	...
		8-98232671-1	−|○	**83515**	...		...	...
		9-51630-647-1	−|○	**83515**	...		...	...
		51630647	−|○	**83515**	...		...	...
		94454986	−|○	**83515**	...		...	...
		94454987	−|○	**83515**	...		...	...
		97083027	−|○	**83515**	...		...	...
		97083029	−|○	**83515**	...		...	...
		97253620	−|○	**83515**	...		...	...
		98098125	−|○	**83515**	...		...	...
		98232671	−|○	**83515**	...		...	...
		8982326710	−|○	**83515**	...		...	...
		8983810100	−|○	**83515**	...		...	...
		8983810120	−|○	**83515**	...		...	...
95-97	Diesel	8-97253-664-0		...	...	○|○	**83159**	...
		97253664		...	...	○|○	**83159**	...

APPLICATION GUIDE - TRUCKS, TRAILERS AND BUSES

Year Ano Année	Model Modelo Modle	OEM #		Front			Rear	
				Fleetline	GasSLX		Fleetline	GasSLX
ISUZU (CONT'D)								
NQR (cont'd)								
2002	Diesel	8-97253-664-0		...	...	O|O	**83159**	...
		97253664		...	...	O|O	**83159**	...
NRR								
05-19	Models with O.E.M. Number	8-97253-665-0		...	...	O|O	**83159**	...
		8-98098-059-0		...	...	O|O	**83159**	...
		8-98098-059-1		...	...	O|O	**83159**	...
		8-98316-228-0		...	...	O|O	**83159**	...
		8-98343986-0		...	...	O|O	**83159**	...
		97253665		...	...	O|O	**83159**	...
		98098059		...	...	O|O	**83159**	...
		98343986		...	...	O|O	**83159**	...
05-22	Models with O.E.M. Number	8-94454-647-1	−|O	**83515**	...		...	...
		8-94454-986-0	−|O	**83515**	...		...	...
		8-94454-987-0	−|O	**83515**	...		...	...
		8-97083-027-0	−|O	**83515**	...		...	...
		8-97083-029-0	−|O	**83515**	...		...	...
		8-97253-620-0	−|O	**83515**	...		...	...
		8-97253-620-1	−|O	**83515**	...		...	...
		8-98098-125-0	−|O	**83515**	...		...	...
		8-98381-010-0	−|O	**83515**	...		...	...
		8-98381-012-0	−|O	**83515**	...		...	...
		8-98232671-0	−|O	**83515**	...		...	...
		8-98232671-1	−|O	**83515**	...		...	...
		9-51630-647-1	−|O	**83515**	...		...	...
		51630647	−|O	**83515**	...		...	...
		94454986	−|O	**83515**	...		...	...
		94454987	−|O	**83515**	...		...	...
		97083027	−|O	**83515**	...		...	...
		97083029	−|O	**83515**	...		...	...
		97253620	−|O	**83515**	...		...	...
		98098125	−|O	**83515**	...		...	...
		98232671	−|O	**83515**	...		...	...
		8982326710	−|O	**83515**	...		...	...
		8983810100	−|O	**83515**	...		...	...
		8983810120	−|O	**83515**	...		...	...
20-23	Models with 15,000 to 16,000 lb Rear	8-98380-747-0		...	...	O|O	**83159**	...
		8983807470		...	...	O|O	**83159**	...
88-94	...	1-51630-217-0	−|O	**83114**	...		...	...
		1-51630-217-1	−|O	**83114**	...		...	...
		1-51630-219-1	−|O	**83114**	...		...	...
		51630217	−|O	**83114**	...		...	...
88-94	Models with O.E.M. Number	8-94454-647-1	−|O	**83515**	...		...	...
		8-94454-986-0	−|O	**83515**	...		...	...
		8-94454-987-0	−|O	**83515**	...		...	...
		8-97083-027-0	−|O	**83515**	...		...	...
		8-97083-029-0	−|O	**83515**	...		...	...
		8-97253-620-0	−|O	**83515**	...		...	...
		8-97253-620-1	−|O	**83515**	...		...	...
		8-98098-125-0	−|O	**83515**	...		...	...
		8-98381-010-0	−|O	**83515**	...		...	...
		8-98381-012-0	−|O	**83515**	...		...	...
		8-98232671-0	−|O	**83515**	...		...	...
		8-98232671-1	−|O	**83515**	...		...	...

Year Ano Année	Model Modelo Modle	OEM #		Front			Rear	
				Fleetline	GasSLX		Fleetline	GasSLX
ISUZU (CONT'D)								
NRR (cont'd)								
88-94	Models with O.E.M. Number	9-51630-647-1	−|○	**83515**	...		...	...
		51630647	−|○	**83515**	...		...	...
		94454986	−|○	**83515**	...		...	...
		94454987	−|○	**83515**	...		...	...
		97083027	−|○	**83515**	...		...	...
		97083029	−|○	**83515**	...		...	...
		97253620	−|○	**83515**	...		...	...
		98098125	−|○	**83515**	...		...	...
		98232671	−|○	**83515**	...		...	...
		8982326710	−|○	**83515**	...		...	...
		8983810100	−|○	**83515**	...		...	...
		8983810120	−|○	**83515**	...		...	...
ITASCA								
CLASS A MOTORHOMES								
03-04	SunCruiser Series MotorHomes with W20 , W22, & W24 Workhorse Chassis	24-153249	○|○	**85125**	...		...	...
		24-186629	○|○	**85125**	...		...	...
		F4-BE5-A832-MO	○|○	**85125**	...		...	...
		F4-BE5-B492-HO	○|○	**85125**	...		...	...
		F4-BE5-F324-HO	○|○	**85125**	...		...	...
		W0005662	○|○	**85125**	...		...	...
		W0006254	○|○	**85125**	...		...	...
02-06	Meridian Series MotorHomes with Freightliner XC Chassis	16-16736-000		...	...	○|○	**85029**	...
		16-16737-000	○|○	**83160**	...		...	...
		16-16873-000		...	...	○|○	**85029**	...
		16-16874-000	○|○	**83160**	...		...	...
		16-18103-000	−|−	**85900**	...		...	...
		1616736000		...	...	○|○	**85029**	...
		1616737000	○|○	**83160**	...		...	...
		1616873000		...	...	○|○	**85029**	...
		1616874000	○|○	**83160**	...		...	...
		1618103000	−|−	**85900**	...		...	...
		141700131809		...	...	○|○	**85029**	...
		141700131810	○|○	**83160**	...		...	...
		481700000493	−|−	**85900**	...		...	...
04-06	Horizon Series MotorHomes with Freightliner XC Chassis	16-16736-000		...	...	○|○	**85029**	...
		16-16737-000	○|○	**83160**	...		...	...
		16-16873-000		...	...	○|○	**85029**	...
		16-16874-000	○|○	**83160**	...		...	...
		16-18103-000	−|−	**85900**	...		...	...
		1616736000		...	...	○|○	**85029**	...
		1616737000	○|○	**83160**	...		...	...
		1616873000		...	...	○|○	**85029**	...
		1616874000	○|○	**83160**	...		...	...
		1618103000	−|−	**85900**	...		...	...
		141700131809		...	...	○|○	**85029**	...
		141700131810	○|○	**83160**	...		...	...
		481700000493	−|−	**85900**	...		...	...
04-11	Sunova Models with W20 , W22, & W24 WorkHorse MotorHome Chassis	24-153256		...	...	−|−	**85124**	...
		24153256		...	...	−|−	**85124**	...
		F4BE5F325HO		...	...	−|−	**85124**	...
		F4-BE5-F325-HO		...	...	−|−	**85124**	...
		W0005663		...	...	−|−	**85124**	...

ITASCA (CONT'D)

CLASS A MOTORHOMES (cont'd)

Year Ano Année	Model Modelo Modle	OEM #		Front			Rear	
				Fleetline	GasSLX		Fleetline	GasSLX
98-11	SunCruiser Series MotorHomes with W20 , W22, & W24 Workhorse Chassis	24186629	O|O	85125	...		...	...
		F4BE5A832MO	O|O	85125	...		...	...
		F4BE5B492HO	O|O	85125	...		...	...
		F4BE5F324HO	O|O	85125	...		...	...
98-11	Sunova Models with W20 , W22, & W24 WorkHorse MotorHome Chassis	24-153249	O|O	85125	...		...	...
		24153249	O|O	85125	...		...	...
		F4BE5A832MO	O|O	85125	...		...	...
		F4BE5F324HO	O|O	85125	...		...	...
		F4-BE5-A832-MO	O|O	85125	...		...	...
		F4-BE5-F324-HO	O|O	85125	...		...	...
		W0005662	O|O	85125	...		...	...
		W0006254	O|O	85125	...		...	...
99-15	SunCruiser Series MotorHomes with Ford F53 Chassis with 16,000 lb GVW to 22,000 lb GVW	1C34-18045-AA	O|O	83209	89414		...	...
		1C34-18045-JA	O|O	83209	89414		...	...
		9U9Z18125A		...	...	O|O	83122	89406
		9U9Z-18124-A	O|O	83209	89414		...	...
		9U9Z-18125-A		...	...	O|O	83122	89406
		9U94-18045-AA	O|O	83209	89414		...	...
		9U94-18080-AA		...	...	O|O	83122	89406
		9U9418080AA		...	...	O|O	83122	89406
		ASH137		...	...	O|O	83122	89406
		ASH1023		...	...	O|O	83122	89406
		ASH1206		...	...	O|O	83122	89406
		ASH1230		...	...	O|O	83122	89406
		ASH25824		...	...	O|O	83122	89406
		ASH-137		...	...	O|O	83122	89406
		ASH-294	O|O	83209	89414		...	...
		ASH-1022	O|O	83209	89414		...	...
		ASH-1023		...	...	O|O	83122	89406
		ASH-1205	O|O	83209	89414		...	...
		ASH-1206		...	...	O|O	83122	89406
		ASH-1228	O|O	83209	89414		...	...
		ASH-1229	O|O	83209	89414		...	...
		ASH-1230		...	...	O|O	83122	89406
		ASH-25822	O|O	83209	89414		...	...
		ASH-25823	O|O	83209	89414		...	...
		ASH-25824		...	...	O|O	83122	89406
		AT621		...	...	O|O	83122	89406
		AT-620	O|O	83209	89414		...	...
		AT-621		...	...	O|O	83122	89406
		AT-766	O|O	83209	89414		...	...
2006	Ellipse Series MotorHomes with Freightliner XC Chassis	16-16736-000		...	...	O|O	85029	...
		16-16737-000	O|O	83160	...		...	...
		16-16873-000		...	...	O|O	85029	...
		16-16874-000	O|O	83160	...		...	...
		16-18103-000	–|–	85900	...		...	...
		1616736000		...	...	O|O	85029	...
		1616737000	O|O	83160	...		...	...
		1616873000		...	...	O|O	85029	...
		1616874000	O|O	83160	...		...	...
		1618103000	–|–	85900	...		...	...
		141700131809		...	...	O|O	85029	...
		141700131810	O|O	83160	...		...	...

Year Ano Année	Model Modelo Modle	OEM #		Front			Rear	
				Fleetline	GasSLX		Fleetline	GasSLX
ITASCA (CONT'D)								
CLASS A MOTORHOMES (cont'd)								
2006	Ellipse Series MotorHomes with Freightliner XC Chassis	481700000493	−|−	85900	...		...	...
	Models with Workhorse UFO Chassis with Hendrickson Softek Front Suspension	66153-002	O|O	83124	89407		...	...
		66153002	O|O	83124	89407		...	...
		F4BE5C832MO	O|O	83124	89407		...	...
		F4-BE5-C832-MO	O|O	83124	89407		...	...
CLASS C MOTORHOMES								
07-14	Impulse Series Motorhomes with Ford E450 Chassis	8C2Z-18124-D	−|O	G63622	...		...	...
		8C2Z-18125-D		...	...	−|O	G63623	...
		8C24-18045-DA	−|O	G63622	...		...	...
		8C24-18080-DB		...	...	−|O	G63623	...
		ASH-1136		...	...	−|O	G63623	...
		ASH-1154	−|O	G63622	...		...	...
		AT-163G	−|O	G63622	...		...	...
		AT-164G		...	...	−|O	G63623	...
01-20	Spirit Series Motorhomes with Ford E450 Chassis	8C2Z-18124-D	−|O	G63622	...		...	...
		8C2Z-18125-D		...	...	−|O	G63623	...
		8C24-18045-DA	−|O	G63622	...		...	...
		8C24-18080-DB		...	...	−|O	G63623	...
		ASH-1136		...	...	−|O	G63623	...
		ASH-1154	−|O	G63622	...		...	...
		AT-163G	−|O	G63622	...		...	...
		AT-164G		...	...	−|O	G63623	...
06-20	Cambria Series Motorhomes with Ford E450 Chassis	8C2Z-18124-D	−|O	G63622	...		...	...
		8C2Z-18125-D		...	...	−|O	G63623	...
		8C24-18045-DA	−|O	G63622	...		...	...
		8C24-18080-DB		...	...	−|O	G63623	...
		ASH-1136		...	...	−|O	G63623	...
		ASH-1154	−|O	G63622	...		...	...
		AT-163G	−|O	G63622	...		...	...
		AT-164G		...	...	−|O	G63623	...
JAYCO RV INC								
CLASS A MOTORHOMES								
14-20	Precept Series MotorHomes with Ford F53 Chassis with 16,000 lb GVW to 22,000 lb GVW	ASH25824		...	...	O|O	83122	89406
		ASH-1229	O|O	83209	89414		...	...
		ASH-25822	O|O	83209	89414		...	...
		ASH-25823	O|O	83209	89414		...	...
		ASH-25824		...	...	O|O	83122	89406
15-20	Alante Series MotorHomes with Ford F53 Chassis with 16,000 lb GVW to 22,000 lb GVW	ASH25824		...	...	O|O	83122	89406
		ASH-1229	O|O	83209	89414		...	...
		ASH-25822	O|O	83209	89414		...	...
		ASH-25823	O|O	83209	89414		...	...
		ASH-25824		...	...	O|O	83122	89406
CLASS C MOTORHOMES								
02-06	Granite Ridge Series MotorHomes with Ford E350 & E450 Chassis	ASH-1136		...	...	−|O	G63623	...
		ASH-1154	−|O	G63622	...		...	...
03-06	Escapade Series MotorHomes with Ford E350 & E450 Chassis	ASH-1136		...	...	−|O	G63623	...
		ASH-1154	−|O	G63622	...		...	...
07-15	Melbourne Series MotorHomes with Ford E350 & E450 Chassis	ASH-1136		...	...	−|O	G63623	...
		ASH-1154	−|O	G63622	...		...	...

APPLICATION GUIDE - TRUCKS, TRAILERS AND BUSES

Year Ano Année	Model Modelo Modle	OEM #		Front			Rear	
				Fleetline	GasSLX		Fleetline	GasSLX
JAYCO RV INC (CONT'D)								
CLASS C MOTORHOMES (cont'd)								
02-19	Greyhawk Series MotorHomes with Ford E350 & E450 Chassis	ASH-1136		...	...	−|○	G63623	...
04-20	Redhawk Series MotorHomes with Ford E350 & E450 Chassis	ASH-1136		...	...	−|○	G63623	...
02-22	Greyhawk Series MotorHomes with Ford E350 & E450 Chassis	ASH-1154	−|○	G63622	...		...	...
04-22	Redhawk Series MotorHomes with Ford E350 & E450 Chassis	ASH-1154	−|○	G63622	...		...	...
JAY MADSEN								
	Additional O.E.M. Interchanges	3166657	○|○	85700				
		3192333	○|○	85700				
JIFFLOX								
	Truck Dolly	CP5222	○|○	85315	...		...	...
		CP-5222	○|○	85315	...		...	...
JOHN DEERE								
MOTORHOME CHASSIS								
73-81	M & R-300, 400, 500 Motorhome Chassis	3638112		...	...	○|○	G63183	...
	Models with O.E.M. Number	4036892	○|○	G63605	...		...	...
KENWORTH								
C500								
95-11	All with Air Glide 200 with 46,000 lb Suspension with 8 air bags, 4 units required	665906		...	...	−|−	85902	...
		665945		...	...	−|−	85902	...
01-16	Models with Air Glide 380 (AG380) Rear Air Suspension	C71-1002		...	...	○|○	85067	89451
		C71-1016		...	...	○|○	85067	89451
		C711002		...	...	○|○	85067	89451
		C711016		...	...	○|○	85067	89451
10-16	Models with Neway ADZ Rear Suspension	90045605		...	...	○|○	85109	...
		90045803		...	...	○|○	85109	...
		90045812		...	...	○|○	85109	...
		471700004423		...	...	○|○	85109	...
		471700013186		...	...	○|○	85109	...
85-16	Models with Taper Leaf Springs on Front Axle	B71-1002	○|○	85001	89410		...	...
		B711002	○|○	85001	89410		...	...
		K374-16	○|○	85001	89410		...	...
		K374-26	○|○	85001	89410		...	...
		K374-27	○|○	85001	89410		...	...
		K37416	○|○	85001	89410		...	...
		K37426	○|○	85001	89410		...	...
		K37427	○|○	85001	89410		...	...
18-19	Models with Neway ADZ Rear Suspension	90045605		...	...	○|○	85109	...
		90045803		...	...	○|○	85109	...
		90045812		...	...	○|○	85109	...
		471700004423		...	...	○|○	85109	...
		471700013186		...	...	○|○	85109	...
18-19	Models with Taper Leaf Springs on Front Axle	B71-1002	○|○	85001	89410		...	...
		B711002	○|○	85001	89410		...	...
		K374-16	○|○	85001	89410		...	...
		K374-26	○|○	85001	89410		...	...
		K374-27	○|○	85001	89410		...	...
		K37416	○|○	85001	89410		...	...
		K37426	○|○	85001	89410		...	...
		K37427	○|○	85001	89410		...	...

Year Ano Année	Model Modelo Modle	OEM #		Front			Rear	
				Fleetline	GasSLX		Fleetline	GasSLX
KENWORTH (CONT'D)								
C540								
88-90	Models with Taper Leaf Springs on Front Axle	B71-1002	○|○	85001	89410		...	...
		B711002	○|○	85001	89410		...	...
		K374-16	○|○	85001	89410		...	...
		K374-26	○|○	85001	89410		...	...
		K374-27	○|○	85001	89410		...	...
		K37416	○|○	85001	89410		...	...
		K37426	○|○	85001	89410		...	...
		K37427	○|○	85001	89410		...	...
92-93	Models with Taper Leaf Springs on Front Axle	B71-1002	○|○	85001	89410		...	...
		B711002	○|○	85001	89410		...	...
		K374-16	○|○	85001	89410		...	...
		K374-26	○|○	85001	89410		...	...
		K374-27	○|○	85001	89410		...	...
		K37416	○|○	85001	89410		...	...
		K37426	○|○	85001	89410		...	...
		K37427	○|○	85001	89410		...	...
C550								
85-94	Models with Taper Leaf Springs on Front Axle	B71-1002	○|○	85001	89410		...	...
		B711002	○|○	85001	89410		...	...
		K374-16	○|○	85001	89410		...	...
		K374-26	○|○	85001	89410		...	...
		K374-27	○|○	85001	89410		...	...
		K37416	○|○	85001	89410		...	...
		K37426	○|○	85001	89410		...	...
		K37427	○|○	85001	89410		...	...
K100E								
85-03	Models with Taper Leaf Springs on Front Axle	B71-1002	○|○	85001	89410		...	...
		B711002	○|○	85001	89410		...	...
		K374-16	○|○	85001	89410		...	...
		K374-26	○|○	85001	89410		...	...
		K374-27	○|○	85001	89410		...	...
		K37416	○|○	85001	89410		...	...
		K37426	○|○	85001	89410		...	...
		K37427	○|○	85001	89410		...	...
05-06	Models with Taper Leaf Springs on Front Axle	B71-1002	○|○	85001	89410		...	...
		B711002	○|○	85001	89410		...	...
		K374-16	○|○	85001	89410		...	...
		K374-26	○|○	85001	89410		...	...
		K374-27	○|○	85001	89410		...	...
		K37416	○|○	85001	89410		...	...
		K37426	○|○	85001	89410		...	...
		K37427	○|○	85001	89410		...	...
K270								
13-22	Models with Hendrickson HAS - 210L or HAS - 230L Rear Air Suspension	60670-008		...	...	○|○	83123	89405
		60670-008L		...	...	○|○	83123	89405
		60670008		...	...	○|○	83123	89405
		60670008L		...	...	○|○	83123	89405
13-22	Models with Reyco 102 or 79KB Suspension (Drive Axle)	16725-01		...	...	○|○	83126	89430
		19495-01		...	...	○|○	83126	89430
		1672501		...	...	○|○	83126	89430
		1949501		...	...	○|○	83126	89430

Year Ano Année	Model Modelo Modle	OEM #		Front			Rear	
				Fleetline	GasSLX		Fleetline	GasSLX
KENWORTH (CONT'D)								
K270 (cont'd)								
13-23	Models with 10,000 lb to 12,000 lb Front Axle	1707378PAC	−|−	**85182**	...		...	...
		BFRG 072	−|−	**85182**	...		...	...
13-23	Models with Hendrickson HAS - 230 Rear Air Suspension	60670-005		...	...	O|O	**83137**	...
		60670-005L		...	...	O|O	**83137**	...
		60670-005PLUS-2		...	...	O|O	**83137**	...
		60670005		...	...	O|O	**83137**	...
		60670005L		...	...	O|O	**83137**	...
K300								
93-05	All with Air Glide 100 Suspension with 8 air bags, 4 units required	K374-29		...	...	−|−	**85310**	89423
		K374-32		...	...	−|−	**85310**	89423
		K37429		...	...	−|−	**85310**	89423
		K37432		...	...	−|−	**85310**	89423
93-05	All with Air Glide 200 with 40,000 lb Suspension with 8 air bags, 4 units required	70701		...	...	−|−	**85900**	...
		665903		...	...	−|−	**85900**	...
		665944		...	...	−|−	**85900**	...
93-05	All with Air Glide 200 with 46,000 lb Suspension with 8 air bags, 4 units required	665906		...	...	−|−	**85902**	...
		665945		...	...	−|−	**85902**	...
93-05	K300 COE Medium Duty	665565	O|O	**85007**	...		...	...
93-05	Models with 12,000 lb Taper Leaf Front Springs (5/8" Top Mounting bolt)	665617	O|O	**85031**	...		...	...
		B71-1000	O|O	**85031**	...		...	...
		B711000	O|O	**85031**	...		...	...
93-05	Models with Hendrickson Rear Air Suspension	47902-19		...	...	O|O	**83123**	89405
		4790219		...	...	O|O	**83123**	89405
93-05	Models with Multiple Leaf Springs on Front Axle (3/4" Mounting bolts)	B71-1003	O|O	**83312**	89409		...	...
		B711003	O|O	**83312**	89409		...	...
		K374-3	O|O	**83312**	89409		...	...
		K374-33	O|O	**83312**	89409		...	...
		K3743	O|O	**83312**	89409		...	...
		K37433	O|O	**83312**	89409		...	...
93-05	Models with Reyco 102 or 79KB Suspension (Drive Axle)	16725-01		...	...	O|O	**83126**	89430
		19495-01		...	...	O|O	**83126**	89430
		1672501		...	...	O|O	**83126**	89430
		1949501		...	...	O|O	**83126**	89430
93-05	Models with Reyco 1209 or 1212 Suspension (Steer Axle)	19495-01	O|O	**83126**	89430		...	...
		1949501	O|O	**83126**	89430		...	...
93-05	Models with Taper Leaf Springs on Front Axle (1" Mounting bolts)	B71-1002	O|O	**85001**	89410		...	...
		B711002	O|O	**85001**	89410		...	...
		K374-16	O|O	**85001**	89410		...	...
		K374-26	O|O	**85001**	89410		...	...
		K374-27	O|O	**85001**	89410		...	...
		K37416	O|O	**85001**	89410		...	...
		K37426	O|O	**85001**	89410		...	...
		K37427	O|O	**85001**	89410		...	...
93-05	Models with Woodhead Shock (Stamping Number ACHB 966)	ACHB966		...	...	−|−	**83136**	...
K370								
13-22	Models with Hendrickson HAS - 210L or HAS - 230L Rear Air Suspension	60670-008		...	...	O|O	**83123**	89405
		60670-008L		...	...	O|O	**83123**	89405
		60670008		...	...	O|O	**83123**	89405
		60670008L		...	...	O|O	**83123**	89405
13-22	Models with Reyco 102 or 79KB Suspension (Drive Axle)	16725-01		...	...	O|O	**83126**	89430
		19495-01		...	...	O|O	**83126**	89430

APPLICATION GUIDE - TRUCKS, TRAILERS AND BUSES

Year Ano Année	Model Modelo Modle	OEM #		Front			Rear	
				Fleetline	GasSLX		Fleetline	GasSLX
KENWORTH (CONT'D)								
K370 (cont'd)								
13-22	Models with Reyco 102 or 79KB Suspension (Drive Axle)	1672501		...	...	○|○	83126	89430
		1949501		...	...	○|○	83126	89430
13-23	Models with 10,000 lb to 12,000 lb Front Axle	1707378PAC	–|–	85182	...		...	...
		BFRG 072	–|–	85182	...		...	...
T170								
08-13	Models with 8,000 lb Taper Leaf Front Springs	665617	○|○	85031	...		...	...
08-19	Models with Reyco 79KB Rear Steel Spring Suspension	16725-01		...	...	○|○	83126	89430
		19495-01		...	...	○|○	83126	89430
		1672501		...	...	○|○	83126	89430
T270								
08-10	Models with 12,000 lb Front Axle	665617	○|○	85031	...		...	...
08-14	Models with Hendrickson HAS - 400 (Standard) Rear Air Suspension	60670-005		...	...	○|○	83137	...
		60670-005L		...	...	○|○	83137	...
		60670005		...	...	○|○	83137	...
		60670005L		...	...	○|○	83137	...
10-14	Models with 8,000 lb Front Axle	B71-6004	○|○	85084	89460		...	...
		B716004	○|○	85084	89460		...	...
10-14	Models with 10,000 lb to 12,000 lb Front Axle	B71-6005	○|○	85084	89460		...	...
		B716005	○|○	85084	89460		...	...
10-14	Models with 13,200 lb to 14,600 lb Front Axle	B71-6006	○|○	85084	89460		...	...
		B716006	○|○	85084	89460		...	...
08-22	Models with Hendrickson HAS - 210L or HAS - 230L Rear Air Suspension	60670-008		...	...	○|○	83123	89405
		60670-008L		...	...	○|○	83123	89405
		60670008		...	...	○|○	83123	89405
		60670008L		...	...	○|○	83123	89405
08-22	Models with Hendrickson Primaax 230, 232, 460, 462, 690 and 692 Air Suspension (8-1/2" to 10" Ride Height)	60657-003		...	...	○|○	85072	...
		60657-003L		...	...	○|○	85072	...
		60657003		...	...	○|○	85072	...
		60657003L		...	...	○|○	85072	...
08-22	Models with Reyco 102 or 79KB Suspension (Drive Axle)	16725-01		...	...	○|○	83126	89430
		19495-01		...	...	○|○	83126	89430
		1672501		...	...	○|○	83126	89430
		1949501		...	...	○|○	83126	89430
		TK19679		...	...	○|○	83126	89430
15-22	Models with 10,000 lb to 14,600 lb Taperleaf Springs and Set Back Front Axles	B71-6019	○|○	85989	...		...	...
		B716019	○|○	85989	...		...	...
15-22	Models with 16,000 lb to 20,000 lb Taperleaf Springs and Set Back Front Axles	B71-6020	○|○	85989	...		...	...
		B716020	○|○	85989	...		...	...
08-23	Models with AG210L Rear Air Suspension	C71-1011		...	...	–|–	85069	89455
		C71-1017		...	...	–|–	85069	89455
		C711011		...	...	–|–	85069	89455
		C711017		...	...	–|–	85069	89455
08-23	Models with Hendrickson HMX 400/460 Haulmax with 16.5" Saddle	60680-004		...	...		83143	...
		60680-004L		...	...		83143	...
		64178-001		...	...		83143	...
		60680004		...	...		83143	...
		60680004L		...	...		83143	...
		64178001		...	...		83143	...
T280								
21-23	Models with 10,000 lb to 12,000 lb Mono-leaf front springs	B71-6019	○|○	85989	...		...	...

KENWORTH (CONT'D)

T280 (cont'd)

Year Ano Année	Model Modelo Modle	OEM #		Front Fleetline	Front GasSLX		Rear Fleetline	Rear GasSLX
21-23	Models with 10,000 lb to 12,000 lb Mono-leaf front springs	B716019	○|○	85989	...		...	...
21-23	Models with Hendrickson HAS - 210L or HAS - 230L Rear Air Suspension	60670-008		...	...	○|○	83123	89405
		60670-008L		...	...	○|○	83123	89405
		60670008		...	...	○|○	83123	89405
		60670008L		...	...	○|○	83123	89405

T300

95-08	All with Air Glide 200 with 46,000 lb Suspension with 8 air bags, 4 units required	665906		...	...	–|–	85902	...
		665945		...	...	–|–	85902	...
95-08	Models with Hendrickson HAS - 210L or HAS - 230L Rear Air Suspension	60670-008		...	...	○|○	83123	89405
		60670-008L		...	...	○|○	83123	89405
		60670008		...	...	○|○	83123	89405
		60670008L		...	...	○|○	83123	89405
99-08	Models with 12,000 lb Taper Leaf Front Springs (5/8" Top Mounting bolt)	665617	○|○	85031	...		...	...
		B71-1000	○|○	85031	...		...	...
		B711000	○|○	85031	...		...	...
99-08	Models with Reyco 102 or 79KB Suspension (Drive Axle)	16725-01		...	...	○|○	83126	89430
		19495-01		...	...	○|○	83126	89430
		1672501		...	...	○|○	83126	89430
		1949501		...	...	○|○	83126	89430
99-08	Models with Reyco 1209 or 1212 Suspension (Steer Axle)	19495-01		...	...	○|○	83126	89430
		1949501		...	...	○|○	83126	89430

T370

08-10	Models with 12,000 lb Front Axle	665617	○|○	85031	...		...	...
08-14	Models with Hendrickson HAS - 400 (Standard) Rear Air Suspension	60670-005		...	...	○|○	83137	...
		60670-005L		...	...	○|○	83137	...
		60670005		...	...	○|○	83137	...
		60670005L		...	...	○|○	83137	...
10-14	Models with 8,000 lb Front Axle	B71-6004	○|○	85084	89460		...	...
		B716004	○|○	85084	89460		...	...
10-14	Models with 10,000 lb to 12,000 lb Front Axle	B71-6005	○|○	85084	89460		...	...
		B716005	○|○	85084	89460		...	...
10-14	Models with 13,200 lb to 14,600 lb Front Axle	B71-6006	○|○	85084	89460		...	...
		B716006	○|○	85084	89460		...	...
08-22	Models with Hendrickson HAS - 210L or HAS - 230L Rear Air Suspension	60670-008		...	...	○|○	83123	89405
		60670-008L		...	...	○|○	83123	89405
		60670008		...	...	○|○	83123	89405
		60670008L		...	...	○|○	83123	89405
08-22	Models with Hendrickson Primaax 230, 232, 460, 462, 690 and 692 Air Suspension (8-1/2" to 10" Ride Height)	60657-003		...	...	○|○	85072	...
		60657-003L		...	...	○|○	85072	...
		60657003		...	...	○|○	85072	...
		60657003L		...	...	○|○	85072	...
08-22	Models with Reyco 102 or 79KB Suspension (Drive Axle)	16725-01		...	...	○|○	83126	89430
		19495-01		...	...	○|○	83126	89430
		1672501		...	...	○|○	83126	89430
		1949501		...	...	○|○	83126	89430
		TK19679		...	...	○|○	83126	89430
15-22	Models with 10,000 lb to 14,600 lb Taperleaf Springs and Set Back Front Axles	B71-6019	○|○	85989	...		...	...
		B716019	○|○	85989	...		...	...
15-22	Models with 16,000 lb to 20,000 lb Taperleaf Springs and Set Back Front Axles	B71-6020	○|○	85989	...		...	...

KENWORTH (CONT'D)

T370 (cont'd)

Year Ano Année	Model Modelo Modle	OEM #	Front Fleetline	Front GasSLX	Rear Fleetline	Rear GasSLX
15-22	Models with 16,000 lb to 20,000 lb Taperleaf Springs and Set Back Front Axles	B716020	85989	...	...	...
08-23	Models with AG210L Rear Air Suspension	C71-1011	...	...	85069	89455
		C71-1017	...	...	85069	89455
		C711011	...	...	85069	89455
		C711017	...	...	85069	89455
08-23	Models with Hendrickson HMX 400/460 Haulmax with 16.5" Saddle	60680-004	...	...	83143	...
		60680-004L	...	...	83143	...
		64178-001	...	...	83143	...
		60680004	...	...	83143	...
		60680004L	...	...	83143	...
		64178001	...	...	83143	...

T380

Year Ano Année	Model Modelo Modle	OEM #	Front Fleetline	Front GasSLX	Rear Fleetline	Rear GasSLX
22-23	Models with 10,000 lb to 14,600 lb Taperleaf Springs	B71-6019	85989	...	...	...
		B716019	85989	...	...	...
22-23	Models with Reyco 102 or 79KB Suspension (Drive Axle)	16725-01	...	...	83126	89430
		19495-01	...	...	83126	89430
		1672501	...	...	83126	89430
		1949501	...	...	83126	89430
		TK19679	...	...	83126	89430
2022	Models with Hendrickson HAS - 230 Rear Air Suspension	60670-005	...	...	83137	...
		60670-005L	...	...	83137	...
		60670-005PLUS-2	...	...	83137	...
		60670005	...	...	83137	...
		60670005L	...	...	83137	...

T400

Year Ano Année	Model Modelo Modle	OEM #	Front Fleetline	Front GasSLX	Rear Fleetline	Rear GasSLX
10-11	All with Air Glide 200 with 46,000 lb Suspension with 8 air bags, 4 units required	665906	...	...	85902	...
		665945	...	...	85902	...
10-22	Models with Taper Leaf Springs on Front Axle	B71-1002	85001	89410	...	...
		B711002	85001	89410	...	...
		K374-16	85001	89410	...	...
		K374-26	85001	89410	...	...
		K374-27	85001	89410	...	...
		K37416	85001	89410	...	...
		K37426	85001	89410	...	...
		K37427	85001	89410	...	...
89-99	Models with Taper Leaf Springs on Front Axle	B71-1002	85001	89410	...	...
		B711002	85001	89410	...	...
		K374-16	85001	89410	...	...
		K374-26	85001	89410	...	...
		K374-27	85001	89410	...	...
		K37416	85001	89410	...	...
		K37426	85001	89410	...	...
		K37427	85001	89410	...	...
92-99	Models with Link Cabmate Air Suspension KWB689-A with rear cab support Kenworth P/N K235-1646 Models with Link Cabmate Air Suspension KWB689-A with rear cab support Kenworth P/N K235-1646	1201-0012	83023			
		1202-0012	83023			
		12010012	83023			
		12020012	83023			
92-99	Models with Link Cabmate KWB689-B or KWB689-C Air Suspension	1201-1043	83025			
		1202-1043	83025			

Year Ano Année	Model Modelo Modle	OEM #		Front			Rear	
				Fleetline	GasSLX		Fleetline	GasSLX
KENWORTH (CONT'D)								
T400 (cont'd)								
92-99	Models with Link Cabmate KWB689-B or KWB689-C Air Suspension	12011043	O|O	**83025**				
		12021043	O|O	**83025**				
95-99	All with Air Glide 200 with 46,000 lb Suspension with 8 air bags, 4 units required	665906		...	...	–|–	**85902**	...
		665945		...	...	–|–	**85902**	...
T450								
93-97	Models with Link Cabmate Air Suspension KWB689-A with rear cab support Kenworth P/N K235-1646	1202-0012	O|O	**83023**				
		12020012	O|O	**83023**				
93-97	Models with Link Cabmate KWB689-B or KWB689-C Air Suspension	1201-1043	O|O	**83025**				
		1202-1043	O|O	**83025**				
		12011043	O|O	**83025**				
		12021043	O|O	**83025**				
93-97	Models with Taper Leaf Springs on Front Axle	B71-1002	O|O	**85001**	89410		...	...
		B711002	O|O	**85001**	89410		...	...
		K374-16	O|O	**85001**	89410		...	...
		K374-26	O|O	**85001**	89410		...	...
		K374-27	O|O	**85001**	89410		...	...
		K37416	O|O	**85001**	89410		...	...
		K37426	O|O	**85001**	89410		...	...
		K37427	O|O	**85001**	89410		...	...
95-97	All with Air Glide 200 with 46,000 lb Suspension with 8 air bags, 4 units required	665906		...	...	–|–	**85902**	...
		665945		...	...	–|–	**85902**	...
T480								
22-23	Models with Hendrickson HMX 400/460 Haulmax with 16.5" Saddle	60680-004		...	...		**83143**	...
		60680-004L		...	...		**83143**	...
		60680004		...	...		**83143**	...
		60680004L		...	...		**83143**	...
22-23	Models with Hendrickson HMX 400/460 Haulmax with 17.5" & 18.5" Saddle	60680-005		...	...		**83142**	...
		60680-005L		...	...		**83142**	...
		60680005		...	...		**83142**	...
		60680005L		...	...		**83142**	...
T600A								
01-08	Models with Air Glide 380 (AG380) Rear Air Suspension	C71-1002		...	...	O|O	**85067**	89451
		C71-1016		...	...	O|O	**85067**	89451
		C711002		...	...	O|O	**85067**	89451
		C711016		...	...	O|O	**85067**	89451
01-08	Models with Air Glide 400 (AG400) Rear Air Suspension	671962		...	...		**85936**	89456
		C71-1014		...	...		**85936**	89456
		C711014		...	...		**85936**	89456
05-08	Models with 13,000 lb Front Axle	665858	O|O	**85070**	89459		...	...
		B71-1001	O|O	**85070**	89459		...	...
		B711001	O|O	**85070**	89459		...	...
05-08	Models with Air Glide 460 (AG460) Rear Air Suspension	671963		...	...		**85937**	...
		671963-2		...	...		**85937**	...
		C71-1015		...	...		**85937**	...
		C71-1015 PLUS		...	...		**85937**	...
		C711015		...	...		**85937**	...
		C711015 PLUS		...	...		**85937**	...
86-08	Models with Link Cabmate KWMC642 Air Suspension	1202-0054	O|O	**83021**				
		12020054	O|O	**83021**				

Year Ano Année	Model Modelo Modle	OEM #		Front			Rear	
				Fleetline	GasSLX		Fleetline	GasSLX
KENWORTH (CONT'D)								
T600A (cont'd)								
86-08	Models with Taper Leaf Springs on Front Axle	B71-1002	○|○	**85001**	**89410**		**...**	**...**
		B711002	○|○	**85001**	**89410**		**...**	**...**
		K374-16	○|○	**85001**	**89410**		**...**	**...**
		K374-26	○|○	**85001**	**89410**		**...**	**...**
		K374-27	○|○	**85001**	**89410**		**...**	**...**
		K37416	○|○	**85001**	**89410**		**...**	**...**
		K37426	○|○	**85001**	**89410**		**...**	**...**
		K37427	○|○	**85001**	**89410**		**...**	**...**
93-08	Models with Hendrickson HAS - 210L or HAS - 230L Rear Air Suspension	47902-19		**...**	**...**	○|○	**83123**	**89405**
		60670-008		**...**	**...**	○|○	**83123**	**89405**
		60670-008L		**...**	**...**	○|○	**83123**	**89405**
		60670008		**...**	**...**	○|○	**83123**	**89405**
		60670008L		**...**	**...**	○|○	**83123**	**89405**
95-08	All with Air Glide 200 with 46,000 lb Suspension with 8 air bags, 4 units required	665906		**...**	**...**	–|–	**85902**	**...**
		665945		**...**	**...**	–|–	**85902**	**...**
98-08	Models with Link Cabmate KWB689-D and Severe service crossmembers	1202-1046	○|○	**83049**				
		1202K046	○|○	**83049**				
		12021046	○|○	**83049**				
		25333002	○|○	**83049**				
		R71-1004	○|○	**83049**				
		R711004	○|○	**83049**				
T660								
07-10	Models with Link Cab Suspension	1202-1065	○|○	**83002**				
		12021065	○|○	**83002**				
08-17	Models with 86" Sleepers with O.E.M. Number	1202-1286	○|○	**83056**				
		1202K286	○|○	**83056**				
		12021286	○|○	**83056**				
		T71-1003	○|○	**83056**				
		T711003	○|○	**83056**				
08-18	Models with 12,000 or 13,200 lb Front Axle	665858	○|○	**85070**	**89459**		**...**	**...**
		B71-1001	○|○	**85070**	**89459**		**...**	**...**
		B711001	○|○	**85070**	**89459**		**...**	**...**
08-18	Models with Air Glide 230 (AG230) Rear Air Suspension	671656		**...**	**...**		**85985**	**...**
		C71-1013		**...**	**...**		**85985**	**...**
		C711013		**...**	**...**		**85985**	**...**
08-18	Models with Air Glide 380 (AG380) Rear Air Suspension	C71-1002		**...**	**...**	○|○	**85067**	**89451**
		C71-1016		**...**	**...**	○|○	**85067**	**89451**
		C71-6015		**...**	**...**	○|○	**85067**	**89451**
		C711002		**...**	**...**	○|○	**85067**	**89451**
		C711016		**...**	**...**	○|○	**85067**	**89451**
		C716015		**...**	**...**	○|○	**85067**	**89451**
08-18	Models with Air Glide 400L (AG400L) Rear Air Suspension	03-08781		**...**	**...**	–|–	**85069**	**89455**
		0308781		**...**	**...**	–|–	**85069**	**89455**
		C71-1011		**...**	**...**	–|–	**85069**	**89455**
		C71-1017		**...**	**...**	–|–	**85069**	**89455**
		C711011		**...**	**...**	–|–	**85069**	**89455**
		C711017		**...**	**...**	–|–	**85069**	**89455**
13-18	Models with Air Glide 400 (AG400) Rear Air Suspension	671962		**...**	**...**		**85936**	**89456**
		C71-1014		**...**	**...**		**85936**	**89456**
		C711014		**...**	**...**		**85936**	**89456**
13-18	Models with O.E.M. Number	B71-6012	○|○	**85119**	**...**		**...**	**...**
		B716012	○|○	**85119**	**...**		**...**	**...**

APPLICATION GUIDE - TRUCKS, TRAILERS AND BUSES

Year Ano Année	Model Modelo Modle	OEM #		Front			Rear	
				Fleetline	GasSLX		Fleetline	GasSLX
KENWORTH (CONT'D)								
T660 (cont'd)								
07-20	Models with Air Glide 460 (AG460) Rear Air Suspension	671963		...	...		85937	...
		671963-2		...	...		85937	...
		C71-1015		...	...		85937	...
		C71-1015 PLUS		...	...		85937	...
		C711015		...	...		85937	...
		C711015 PLUS		...	...		85937	...
T680								
13-14	Models with 10,000 lb to 13,200 lb Front Axle	B71-6005	O|O	85084	89460		...	...
		B716005	O|O	85084	89460		...	...
13-18	Models with O.E.M. Number	B71-6012	O|O	85119	...		...	...
		B716012	O|O	85119	...		...	...
13-19	Models with Hendrickson Primaax EX 462 Air Suspensions with 12 1/2" - 14 3/8" - 15 1/2" Ride Height	60665-011		...	...	O|O	85967	...
		60665011		...	...	O|O	85967	...
13-19	Models with Watson & Chalin SL Series Steerable Lift Axle (8,000 to 13,500 lb)	11418		...	...	O|O	646177	...
		11418WAC		...	...	O|O	646177	...
13-22	Models with 21,000 to 23,000 lb Reyco Spring Suspension	19495-01		...	...	O|O	83126	89430
		1949501		...	...	O|O	83126	89430
		TK19679		...	...	O|O	83126	89430
13-22	Models with Air Glide 400 (AG400) Rear Air Suspension	671962		...	...		85936	89456
		C71-1014		...	...		85936	89456
		C711014		...	...		85936	89456
13-22	Models with Hendrickson Primaax EX 462 Air Suspensions with 8 1/2" to 10" Ride Height	60657-003		...	...	O|O	85072	...
		60657-003L		...	...	O|O	85072	...
		60657003		...	...	O|O	85072	...
		60657003L		...	...	O|O	85072	...
13-22	Models with Reyco 102 or 79KB Suspension (Drive Axle)	16725-01		...	...	O|O	83126	89430
		19495-01		...	...	O|O	83126	89430
		1672501		...	...	O|O	83126	89430
		1949501		...	...	O|O	83126	89430
14-22	Models with 16,000 lb to 20,000 lb Taperleaf Springs and Set Back Front Axles	B71-6020	O|O	85989	...		...	...
		B716020	O|O	85989	...		...	...
11-23	Models with Air Glide 380 (AG380) Rear Air Suspension	C71-1002		...	...	O|O	85067	89451
		C71-1016		...	...	O|O	85067	89451
		C71-6015		...	...	O|O	85067	89451
		C711002		...	...	O|O	85067	89451
		C711016		...	...	O|O	85067	89451
		C716015		...	...	O|O	85067	89451
11-23	Models with Air Glide 460 (AG460) Rear Air Suspension	671963		...	...		85937	...
		671963-2		...	...		85937	...
		C71-1015		...	...		85937	...
		C71-1015 PLUS		...	...		85937	...
		C711015		...	...		85937	...
		C711015 PLUS		...	...		85937	...
13-23	Models with Air Glide 400L (AG400L) Rear Air Suspension	C71-1011		...	...	–|–	85069	89455
		C71-1017		...	...	–|–	85069	89455
		C711011		...	...	–|–	85069	89455
		C711017		...	...	–|–	85069	89455
13-23	Models with Hendrickson HMX 400/460 or 520 Haulmax with 16.5" Saddle	60680-004		...	...		83143	...
		60680-004L		...	...		83143	...
		60680004		...	...		83143	...

Year Ano Année	Model Modelo Modle	OEM #		Front			Rear	
				Fleetline	GasSLX		Fleetline	GasSLX
KENWORTH (CONT'D)								
T680 (cont'd)								
13-23	Models with Hendrickson HMX 400/460 or 520 Haulmax with 16.5" Saddle	60680004L		...	...		83143	...
13-23	Models with Hendrickson HMX 400/460 or 520 Haulmax with 17.5" & 18.5" Saddle	60680-005		...	...		83142	...
		60680-005L		...	...		83142	...
		60680005		...	...		83142	...
		60680005L		...	...		83142	...
13-23	Models with Neway ADZ Rear Suspension	90045605		...	...	○|○	85109	...
		90045803		...	...	○|○	85109	...
		90045812		...	...	○|○	85109	...
		471700004423		...	...	○|○	85109	...
		471700013186		...	...	○|○	85109	...
13-23	Models with Sleepers with O.E.M. Number	1201-8002	○|○	83081				
		12018002	○|○	83081				
		25523013	○|○	83081				
		25523024	○|○	83081				
		R71-6009	○|○	83081				
		R716009	○|○	83081				
14-23	Models with 10,000 lb to 14,600 lb Taperleaf Springs and Set Back Front Axles	B71-6019	○|○	85989	...		...	...
		B716019	○|○	85989	...		...	...
17-23	Day Cab Models with O.E.M. Number	1201-8001	○|○	83908				
		12018001	○|○	83908				
		25523002	○|○	83908				
T700								
11-15	Models with 13,000 lb Front Axle	665858	○|○	85070	89459		...	...
		B71-1001	○|○	85070	89459		...	...
		B711001	○|○	85070	89459		...	...
11-15	Models with 86" Sleepers with O.E.M. Number	1202-1286	○|○	83056				
		1202K286	○|○	83056				
		12021286	○|○	83056				
		T71-1003	○|○	83056				
		T711003	○|○	83056				
11-15	Models with Air Glide 230 (AG230) Rear Air Suspension	671656		...	...		85985	...
		C71-1013		...	...		85985	...
		C711013		...	...		85985	...
11-15	Models with Air Glide 380 (AG380) Rear Air Suspension	C71-1002		...	...	○|○	85067	89451
		C71-1016		...	...	○|○	85067	89451
		C71-6015		...	...	○|○	85067	89451
		C711002		...	...	○|○	85067	89451
		C711016		...	...	○|○	85067	89451
		C716015		...	...	○|○	85067	89451
11-15	Models with Air Glide 400 (AG400) Rear Air Suspension	671962		...	...		85936	89456
		C71-1014		...	...		85936	89456
		C711014		...	...		85936	89456
11-15	Models with Air Glide 400L (AG400L) Rear Air Suspension	03-08781		...	...	–|–	85069	89455
		0308781		...	...	–|–	85069	89455
		C71-1011		...	...	–|–	85069	89455
		C71-1017		...	...	–|–	85069	89455
		C711011		...	...	–|–	85069	89455
		C711017		...	...	–|–	85069	89455
11-15	Models with Extended Sleeper Cab	1202-1064	○|○	83024				
		1202K064	○|○	83024				
		12021064	○|○	83024				
		R71-1005	○|○	83024				

APPLICATION GUIDE - TRUCKS, TRAILERS AND BUSES

Year Ano Année	Model Modelo Modle	OEM #		Front			Rear	
				Fleetline	GasSLX		Fleetline	GasSLX
KENWORTH (CONT'D)								
T700 (cont'd)								
11-15	Models with Extended Sleeper Cab	R711005	O|O	**83024**				
T800								
95-11	All with Air Glide 200 with 46,000 lb Suspension with 8 air bags, 4 units required	665906		...	...	–|–	**85902**	...
		665945		...	...	–|–	**85902**	...
07-18	Models with Air Glide 230 (AG230) Rear Air Suspension	671656		...	...		**85985**	...
		C71-1013		...	...		**85985**	...
		C711013		...	...		**85985**	...
01-21	Models with Air Glide 380 (AG380) Rear Air Suspension	C71-1002		...	...	O|O	**85067**	**89451**
		C71-1016		...	...	O|O	**85067**	**89451**
		C71-6015		...	...	O|O	**85067**	**89451**
		C711002		...	...	O|O	**85067**	**89451**
		C711016		...	...	O|O	**85067**	**89451**
		C716015		...	...	O|O	**85067**	**89451**
87-21	Models with Chalmers 40,000 lb Rear Suspension	665174		...	...	O|O	**85060**	...
		800670		...	...	O|O	**85060**	...
01-22	Models with Air Glide 400 (AG400) Rear Air Suspension	671962		...	...		**85936**	**89456**
		C71-1014		...	...		**85936**	**89456**
		C711014		...	...		**85936**	**89456**
06-22	Models with 38" Sleeper Cabs	1201-1264	O|O	**83031**				
		1202-1264	O|O	**83031**				
		12011264	O|O	**83031**				
		12021264	O|O	**83031**				
		T71-1000	O|O	**83031**				
		T711000	O|O	**83031**				
10-22	Models with Taper Leaf Springs on Front Axle	B71-1002	O|O	**85001**	**89410**		...	...
		B711002	O|O	**85001**	**89410**		...	...
		K374-16	O|O	**85001**	**89410**		...	...
		K374-26	O|O	**85001**	**89410**		...	...
		K374-27	O|O	**85001**	**89410**		...	...
		K37416	O|O	**85001**	**89410**		...	...
		K37426	O|O	**85001**	**89410**		...	...
		K37427	O|O	**85001**	**89410**		...	...
87-22	Models with Reyco 102 or 79KB Suspension (Drive Axle)	16725-01		...	...	O|O	**83126**	**89430**
		19495-01		...	...	O|O	**83126**	**89430**
		1672501		...	...	O|O	**83126**	**89430**
		1949501		...	...	O|O	**83126**	**89430**
		TK19679		...	...	O|O	**83126**	**89430**
87-22	Models with Reyco 1209 or 1212 Suspension (Steer Axle)	19495-01	O|O	**83126**	**89430**		...	...
		1949501	O|O	**83126**	**89430**		...	...
93-22	Models with Hendrickson HAS - 210L or HAS - 230L Rear Air Suspension	47902-19		...	...	O|O	**83123**	**89405**
		60670-008		...	...	O|O	**83123**	**89405**
		60670-008L		...	...	O|O	**83123**	**89405**
		60670008		...	...	O|O	**83123**	**89405**
		60670008L		...	...	O|O	**83123**	**89405**
01-23	Models with Hendrickson HMX 400/460 Haulmax with 17.5" & 18.5" Saddle	60680-005		...	...		**83142**	...
		60680-005L		...	...		**83142**	...
		60680005		...	...		**83142**	...
		60680005L		...	...		**83142**	...
01-23	Models with Hendrickson HMX 460 Haulmax with 16.5" Saddle	60680-004		...	...		**83143**	...
		60680-004L		...	...		**83143**	...
		60680004		...	...		**83143**	...
		60680004L		...	...		**83143**	...

KENWORTH (CONT'D)

T800 (cont'd)

Year Ano Année	Model Modelo Modle	OEM #		Front Fleetline	Front GasSLX		Rear Fleetline	Rear GasSLX
04-23	Models with Hendrickson Primaax EX 232, 462 and 692 Air Suspension (8-1/2" to 10" Ride Height)	60657-003		...	...	○|○	85072	...
		60657-003L		...	...	○|○	85072	...
		60657003		...	...	○|○	85072	...
		60657003L		...	...	○|○	85072	...
05-23	Models with 12,000 to 20,000 lb Front Axles	665858	○|○	85070	89459		...	...
		B71-1001	○|○	85070	89459		...	...
		B711001	○|○	85070	89459		...	...
05-23	Models with Air Glide 460 (AG460) Rear Air Suspension	671963		...	...		85937	...
		C71-1015		...	...		85937	...
		C71-1015 PLUS		...	...		85937	...
		C711015		...	...		85937	...
		C711015 PLUS		...	...		85937	...
08-23	Models with Air Glide 400L (AG400L) Rear Air Suspension	C71-1011		...	...	–|–	85069	89455
		C71-1017		...	...	–|–	85069	89455
		C711011		...	...	–|–	85069	89455
		C711017		...	...	–|–	85069	89455
10-23	Models with Neway ADZ Rear Suspension	90045605		...	...	○|○	85109	...
		90045803		...	...	○|○	85109	...
		90045812		...	...	○|○	85109	...
		471700004423		...	...	○|○	85109	...
		471700013186		...	...	○|○	85109	...
98-23	Models with Link Cabmate KWB689-D and Severe service crossmembers	1202-1046	○|○	83049				
		1202K046	○|○	83049				
		12021046	○|○	83049				
		25333002	○|○	83049				
		R71-1004	○|○	83049				
		R711004	○|○	83049				
87-99	Models with Reyco 1209 or 1212 Suspension (Steer Axle)	TK19679	○|○	83126	89430		...	...
87-99	Models with Taper Leaf Springs on Front Axle	B71-1002	○|○	85001	89410		...	...
		B711002	○|○	85001	89410		...	...
		K374-16	○|○	85001	89410		...	...
		K374-26	○|○	85001	89410		...	...
		K374-27	○|○	85001	89410		...	...
		K37416	○|○	85001	89410		...	...
		K37426	○|○	85001	89410		...	...
		K37427	○|○	85001	89410		...	...
2005	Models with Air Glide 460 (AG460) Rear Air Suspension	671963-2		...	...		85937	...

T880

14-16	Models with O.E.M. Number	B71-6012	○|○	85119	...		...	...
		B716012	○|○	85119	...		...	...
14-18	Sleeper cab Models with Link Cab Suspension	1202-1046	○|○	83049				
		12021046	○|○	83049				
14-19	Models with Hendrickson Primaax EX 462 Air Suspensions (Standard with 12 1/2" - 14 3/8" - 15 1/2" Ride Height)	60665-011		...	...	○|○	85967	...
		60665011		...	...	○|○	85967	...
14-19	Models with Watson & Chalin SL Series Steerable Lift Axle (8,000 to 13,500 lb)	11418		...	...	○|○	646177	...
		11418WAC		...	...	○|○	646177	...
14-21	Models with Air Glide 380 (AG380) Rear Air Suspension	C71-1002		...	...	○|○	85067	89451
		C71-1016		...	...	○|○	85067	89451
		C71-6015		...	...	○|○	85067	89451
		C711002		...	...	○|○	85067	89451
		C711016		...	...	○|○	85067	89451

KENWORTH (CONT'D)

T880 (cont'd)

Year Ano Année	Model Modelo Modle	OEM #		Front Fleetline	Front GasSLX		Rear Fleetline	Rear GasSLX
14-21	Models with Air Glide 380 (AG380) Rear Air Suspension	C716015		...	...	O|O	85067	89451
14-22	Models with Air Glide 400 (AG400) Rear Air Suspension	671962		...	...		85936	89456
		C71-1014		...	...		85936	89456
		C711014		...	...		85936	89456
14-22	Models with Reyco 102 or 79KB Suspension (Drive Axle)	16725-01		...	...	O|O	83126	89430
		19495-01		...	...	O|O	83126	89430
		1672501		...	...	O|O	83126	89430
		1949501		...	...	O|O	83126	89430
11-23	Models with Air Glide 460 (AG460) Rear Air Suspension	671963		...	...		85937	...
		671963-2		...	...		85937	...
		C71-1015		...	...		85937	...
		C71-1015A		...	...		85937	...
		C71-1015 PLUS		...	...		85937	...
		C711015		...	...		85937	...
		C711015A		...	...		85937	...
		C711015 PLUS		...	...		85937	...
14-23	Models with 10,000 lb to 14,600 lb Taperleaf Springs and Set Back Front Axles	B71-6019	O|O	85989	...		...	...
		B716019	O|O	85989	...		...	...
14-23	Models with 16,000 lb to 20,000 lb Taperleaf Springs and Set Back Front Axles	B71-6020	O|O	85989	...		...	...
		B716020	O|O	85989	...		...	...
14-23	Models with Air Glide 400L (AG400L) Rear Air Suspension	C71-1017		...	...	–|–	85069	89455
		C711017		...	...	–|–	85069	89455
14-23	Models with Hendrickson HMX 400/460 or 520 Haulmax with 16.5" Saddle	60680-004		...	...		83143	...
		60680-004L		...	...		83143	...
		60680004		...	...		83143	...
		60680004L		...	...		83143	...
14-23	Models with Hendrickson HMX 400/460 or 520 Haulmax with 17.5" & 18.5" Saddle	60680-005		...	...		83142	...
		60680-005L		...	...		83142	...
		60680005		...	...		83142	...
		60680005L		...	...		83142	...
14-23	Models with Hendrickson Primaax EX 462 Air Suspensions with 8 1/2" to 10" Ride Height	60657-003		...	...	O|O	85072	...
		60657-003L		...	...	O|O	85072	...
		60657003		...	...	O|O	85072	...
		60657003L		...	...	O|O	85072	...
14-23	Models with Neway ADZ Rear Suspension	90045605		...	...	O|O	85109	...
		90045803		...	...	O|O	85109	...
		90045812		...	...	O|O	85109	...
		471700004423		...	...	O|O	85109	...
		471700013186		...	...	O|O	85109	...
16-23	Day Cab Models with O.E.M. Number	1201-8001	O|O	83908				
		12018001	O|O	83908				
		25523002	O|O	83908				
20-23	Models with Sleepers with O.E.M. Number (Shock only)	1201-8002	O|O	83081				
		12018002	O|O	83081				
		25523013	O|O	83081				
2023	Models with 18,000 lb to 23,000 lb Taperleaf Front Spring Suspension and Set Forward Front Axle.	B71-6011	O|O	85062	89408		...	...
		B716011	O|O	85062	89408		...	...

T2000

01-11	Models with Air Glide 380 (AG380) Rear Air Suspension	C71-1002		...	...	O|O	85067	89451

Year Ano Année	Model Modelo Modle	OEM #		Front			Rear	
				Fleetline	GasSLX		Fleetline	GasSLX
KENWORTH (CONT'D)								
T2000 (cont'd)								
01-11	Models with Air Glide 380 (AG380) Rear Air Suspension	C71-1016		...	...	○|○	85067	89451
		C711002		...	...	○|○	85067	89451
		C711016		...	...	○|○	85067	89451
05-11	Models with Air Glide 400 (AG400) Rear Air Suspension	671962		...	...		85936	89456
		C71-1014		...	...		85936	89456
		C711014		...	...		85936	89456
05-11	Models with Air Glide 460 (AG460) Rear Air Suspension	671963		...	...		85937	...
06-11	Models with 13,000 lb Front Axle	665858	○|○	85070	89459		...	...
		B71-1001	○|○	85070	89459		...	...
		B711001	○|○	85070	89459		...	...
97-11	All with Air Glide 100 Suspension with 8 air bags, 4 units required	K374-29		...	...	–|–	85310	89423
		K374-32		...	...	–|–	85310	89423
		K37429		...	...	–|–	85310	89423
		K37432		...	...	–|–	85310	89423
97-11	All with Air Glide 200 with 40,000 lb Suspension with 8 air bags, 4 units required	70701		...	...	–|–	85900	...
		665903		...	...	–|–	85900	...
		665944		...	...	–|–	85900	...
97-11	All with Air Glide 200 with 46,000 lb Suspension with 8 air bags, 4 units required	665906		...	...	–|–	85902	...
		665945		...	...	–|–	85902	...
97-11	Models with Link Cabmate KWT2000-A Air Suspension	1202-1064	○|○	83024				
		1202K064	○|○	83024				
		12021064	○|○	83024				
		R71-1005	○|○	83024				
		R711005	○|○	83024				
97-11	Models with Taper Leaf Springs on Front Axle	B71-1002	○|○	85001	89410		...	...
		B711002	○|○	85001	89410		...	...
		K374-16	○|○	85001	89410		...	...
		K374-26	○|○	85001	89410		...	...
		K374-27	○|○	85001	89410		...	...
		K37416	○|○	85001	89410		...	...
		K37426	○|○	85001	89410		...	...
		K37427	○|○	85001	89410		...	...
98-11	Models with PowerPacker Cab Suspension after 6/28/98	PP2582870	○|○	83012				
W900								
95-11	All with Air Glide 200 with 46,000 lb Suspension with 8 air bags, 4 units required	665906		...	...	–|–	85902	...
		665945		...	...	–|–	85902	...
07-18	Models with Air Glide 230 (AG230) Rear Air Suspension	671656		...	...		85985	...
		C71-1013		...	...		85985	...
		C711013		...	...		85985	...
01-21	Models with Air Glide 380 (AG380) Rear Air Suspension	C71-1002		...	...	○|○	85067	89451
		C71-1016		...	...	○|○	85067	89451
		C71-6015		...	...	○|○	85067	89451
		C711002		...	...	○|○	85067	89451
		C711016		...	...	○|○	85067	89451
		C716015		...	...	○|○	85067	89451
04-22	Models with Hendrickson Primaax EX 462 Air Suspensions with 8 1/2" to 10" Ride Height	60657-003		...	...	○|○	85072	...
		60657-003L		...	...	○|○	85072	...
		60657003		...	...	○|○	85072	...
		60657003L		...	...	○|○	85072	...
05-22	Models with 12,000 or 13,200 lb Front Axle	665858	○|○	85070	89459		...	...

Year Ano Année	Model Modelo Modle	OEM #		Front			Rear	
				Fleetline	GasSLX		Fleetline	GasSLX
KENWORTH (CONT'D)								
W900 (cont'd)								
05-22	Models with 12,000 or 13,200 lb Front Axle	B71-1001	O|O	**85070**	**89459**		...	...
		B711001	O|O	**85070**	**89459**		...	...
06-22	Models with 86" Sleepers with O.E.M. Number	1202-1286	O|O	**83056**				
		1202K286	O|O	**83056**				
		12021286	O|O	**83056**				
		T71-1003	O|O	**83056**				
		T711003	O|O	**83056**				
06-22	Models with Reyco 102 or 79KB Suspension (Drive Axle)	16725-01		...	...	O|O	**83126**	**89430**
		19495-01		...	...	O|O	**83126**	**89430**
		1672501		...	...	O|O	**83126**	**89430**
		1949501		...	...	O|O	**83126**	**89430**
93-22	Models with Hendrickson HAS - 210L or HAS - 230L Rear Air Suspension	47902-19		...	...	O|O	**83123**	**89405**
		60670-008		...	...	O|O	**83123**	**89405**
		60670-008L		...	...	O|O	**83123**	**89405**
		60670008		...	...	O|O	**83123**	**89405**
		60670008L		...	...	O|O	**83123**	**89405**
01-23	Models with Hendrickson HMX 400/460 Haulmax with 16.5" Saddle	60680-004		...	...		**83143**	...
		60680-004L		...	...		**83143**	...
		60680004		...	...		**83143**	...
		60680004L		...	...		**83143**	...
01-23	Models with Hendrickson HMX 400/460 Haulmax with 17.5" & 18.5" Saddle	60680-005		...	...		**83142**	...
		60680-005L		...	...		**83142**	...
		60680005		...	...		**83142**	...
		60680005L		...	...		**83142**	...
04-23	Models with Air Glide 400 (AG400) Rear Air Suspension	671962		...	...		**85936**	**89456**
		C71-1014		...	...		**85936**	**89456**
		C711014		...	...		**85936**	**89456**
05-23	Models with Air Glide 460 (AG460) Rear Air Suspension	671963-2		...	...		**85937**	...
06-23	Models with Link Cab Suspension	1202K065	O|O	**83002**				
		T71-1002	O|O	**83002**				
		T711002	O|O	**83002**				
08-23	Models with Air Glide 400L (AG400L) Rear Air Suspension	C71-1011		...	...	–|–	**85069**	**89455**
		C71-1017		...	...	–|–	**85069**	**89455**
		C711011		...	...	–|–	**85069**	**89455**
		C711017		...	...	–|–	**85069**	**89455**
08-23	Models with Air Glide 460 (AG460) Rear Air Suspension	671963		...	...		**85937**	...
		C71-1015		...	...		**85937**	...
		C71-1015 PLUS		...	...		**85937**	...
		C711015		...	...		**85937**	...
		C711015 PLUS		...	...		**85937**	...
10-23	Models with Neway ADZ Rear Suspension	90045605		...	...	O|O	**85109**	...
		90045803		...	...	O|O	**85109**	...
		90045812		...	...	O|O	**85109**	...
		471700004423		...	...	O|O	**85109**	...
		471700013186		...	...	O|O	**85109**	...
10-23	Models with Taper Leaf Springs on Front Axle	B71-1002	O|O	**85001**	**89410**		...	...
		B711002	O|O	**85001**	**89410**		...	...
		K374-16	O|O	**85001**	**89410**		...	...
		K374-26	O|O	**85001**	**89410**		...	...
		K374-27	O|O	**85001**	**89410**		...	...
		K37416	O|O	**85001**	**89410**		...	...
		K37426	O|O	**85001**	**89410**		...	...
		K37427	O|O	**85001**	**89410**		...	...
98-23	Models with Link Cabmate KWB689-D and Severe service crossmembers	1202-1046	O|O	**83049**				

Year Ano Année	Model Modelo Modle	OEM #		Front			Rear	
				Fleetline	GasSLX		Fleetline	GasSLX
KENWORTH (CONT'D)								
W900 (cont'd)								
98-23	Models with Link Cabmate KWB689-D and Severe service crossmembers	1202K046	O|O	83049				
		12021046	O|O	83049				
		25333002	O|O	83049				
		R71-1004	O|O	83049				
		R711004	O|O	83049				
87-99	Models with Taper Leaf Springs on Front Axle	B71-1002	O|O	85001	89410		...	...
		B711002	O|O	85001	89410		...	...
		K374-16	O|O	85001	89410		...	...
		K374-26	O|O	85001	89410		...	...
		K374-27	O|O	85001	89410		...	...
		K37416	O|O	85001	89410		...	...
		K37426	O|O	85001	89410		...	...
		K37427	O|O	85001	89410		...	...
2020	Models with 18,000 lb to 23,000 lb Taperleaf Front Spring Suspension and Set Forward Front Axle.	B71-6011	O|O	85062	89408		...	...
		B716011	O|O	85062	89408		...	...
W990								
19-21	Models with Air Glide 380 (AG380) Rear Air Suspension	C71-6015		...	...	O|O	85067	89451
		C716015		...	...	O|O	85067	89451
19-22	Models with Air Glide 400 (AG400) Rear Air Suspension	C71-1014		...	...		85936	89456
		C711014		...	...		85936	89456
19-22	Models with Hendrickson Primaax 230, 460 and 690 Air Suspension (8-1/2" to 10" Ride Height)	60657-003		...	...	O|O	85072	...
		60657-003L		...	...	O|O	85072	...
		60657003		...	...	O|O	85072	...
		60657003L		...	...	O|O	85072	...
19-22	Models with Reyco 102 or 79KB Suspension (Drive Axle)	16725-01		...	...	O|O	83126	89430
		19495-01		...	...	O|O	83126	89430
		1672501		...	...	O|O	83126	89430
		1949501		...	...	O|O	83126	89430
19-23	Day Cab Models with O.E.M. Number	1201-8001	O|O	83908				
		25523002	O|O	83908				
19-23	Models with 14,600 lb Taperleaf Front Spring Suspension	B71-6013	O|O	85012	89413		...	...
		B716013	O|O	85012	89413		...	...
19-23	Models with Air Glide 400L (AG400L) Rear Air Suspension	C71-1017		...	...	–|–	85069	89455
		C711017		...	...	–|–	85069	89455
19-23	Models with Air Glide 460 (AG460) Rear Air Suspension	671963-2		...	...		85937	...
		C71-1015		...	...		85937	...
		C71-1015 PLUS		...	...		85937	...
		C711015		...	...		85937	...
		C711015 PLUS		...	...		85937	...
19-23	Models with Hendrickson HMX 400/460 or 520 Haulmax with 16.5" Saddle	60680-004		...	...		83143	...
		60680-004L		...	...		83143	...
		60680004		...	...		83143	...
		60680004L		...	...		83143	...
19-23	Models with Hendrickson HMX 400/460 or 520 Haulmax with 17.5" & 18.5" Saddle	60680-005		...	...		83142	...
		60680-005L		...	...		83142	...
		60680005		...	...		83142	...
		60680005L		...	...		83142	...
19-23	Models with Neway ADZ Rear Suspension	90045605		...	...	O|O	85109	...
		90045803		...	...	O|O	85109	...
		90045812		...	...	O|O	85109	...
		471700004423		...	...	O|O	85109	...

Year Ano Année	Model Modelo Modle	OEM #		Front			Rear	
				Fleetline	GasSLX		Fleetline	GasSLX
KENWORTH (CONT'D)								
W990 (cont'd)								
19-23	Models with Neway ADZ Rear Suspension	471700013186		...	...		85109	...
19-23	Models with Sleepers with O.E.M. Number	1201-8002		83081				
		12018002		83081				
		25523013		83081				
		25523024		83081				
		R71-6009		83081				
		R716009		83081				
2023	Models with 18,000 lb to 23,000 lb Taperleaf Front Spring Suspension and Set Forward Front Axle.	B71-6011		85062	89408		...	...
		B716011		85062	89408		...	...
ADDITIONAL APPLICATIONS								
86-21	Kenworth Sleepers with Link Cabmate KWS60-A Air Suspension and round cornered doors.	1201-1044		83025				
		12011044		83025				
	60" Sleeper with Link Cab Suspension	1202-0043		83025				
		12020043		83025				
	Conventional Day Cab with O.E.M. Number	R71-6005		83042				
		R716005		83042				
	Conventional Tractors with A-Model cabs & Link Cabmate Model KWA900	1201-0012		83023				
		1202-0012		83023				
		12010012		83023				
		12020012		83023				
	Models with Link Cab Suspension	1202-0042		83025				
		1202K065		83002				
		1202-K065		83002				
		12020042		83025				
	Models with O.E.M. Number	1202K164		83031				
		1202K264		83031				
		PP1058870		83059				
		T71-1000		83031				
		T71-1001		83031				
		T711000		83031				
		T711001		83031				
AEROCAB								
08-16	Models with 86" Sleepers with O.E.M. Number	1202-1286		83056				
		1202K286		83056				
		12021286		83056				
		T71-1003		83056				
		T711003		83056				
	Models with 38" Sleepers with Link Cabmate Models KWK1T03 or KWCSA 01–06	1202-1264		83031				
		12021264		83031				
	Models with 62" and 74" Sleepers with O.E.M. Number	1202-1164		83031				
		12021164		83031				
	Models with Link Cab Suspension	1202-1065		83002				
		12021065		83002				
C500, C500B, C500K, C540 & C550								
	All with Air Glide 100 Suspension with 8 air bags, 4 units required	K374-29		...	...		85310	89423
		K374-32		...	...		85310	89423
		K37429		...	...		85310	89423
		K37432		...	...		85310	89423
	All with Air Glide 200 with 40,000 lb Suspension with 8 air bags, 4 units required	70701		...	...		85900	...

Year Ano Année	Model Modelo Modle	OEM #		Front			Rear	
				Fleetline	GasSLX		Fleetline	GasSLX
KENWORTH (CONT'D)								
C500, C500B, C500K, C540 & C550 (cont'd)								
	All with Air Glide 200 with 40,000 lb Suspension with 8 air bags, 4 units required	665903		...	...	–|–	85900	...
		665944		...	...	–|–	85900	...
	All with Air Glide 200 with 46,000 lb Suspension with 8 air bags, 4 units required	665906		...	...	–|–	85902	...
		665945		...	...	–|–	85902	...
	Models with Dual Steering Front Axle and Torsion Bar Bogey Rear Suspension	K374-4		...	...	O|O	85314	89425
		K374-28		...	...	O|O	85314	89425
		K3744		...	...	O|O	85314	89425
		K37428		...	...	O|O	85314	89425
	Models with Multiple Leaf Springs on Front Axle To 2009	B71-1003	O|O	83312	89409		...	...
		B711003	O|O	83312	89409		...	...
		K374-3	O|O	83312	89409		...	...
		K374-33	O|O	83312	89409		...	...
		K3743	O|O	83312	89409		...	...
		K37433	O|O	83312	89409		...	...
C-500B								
	Models with Link Cabmate KWB500 Air Suspension	1202-0044	O|O	83025				
		12020044	O|O	83025				
COE MODELS								
	90" and 112" E Models with Link Cabmate KWE90112-B Air Suspsension	1202K064	O|O	83024				
		R71-1005	O|O	83024				
		R711005	O|O	83024				
	Models with Link Cabmate KW1102-B Air Suspension (Does not fit Non-Sleeper cabs)	1202-0032	O|O	83016				
		12020032	O|O	83016				
	Models with Link Cabmate KWE90112-A Air Suspension	1202-0032	O|O	83016				
		12020032	O|O	83016				
ICON 900								
16-17	Models with 10,000 lb to 14,600 lb Taperleaf Springs and Set Back Front Axles	B71-6019	O|O	85989	...		...	...
		B716019	O|O	85989	...		...	...
16-17	Models with Air Glide 380 (AG380) Rear Air Suspension	C71-1016		...	...	O|O	85067	89451
		C71-6015		...	...	O|O	85067	89451
		C711016		...	...	O|O	85067	89451
		C716015		...	...	O|O	85067	89451
16-17	Models with Air Glide 400 (AG400) Rear Air Suspension	C71-1014		...	...		85936	89456
		C711014		...	...		85936	89456
16-17	Models with Air Glide 460 (AG460) Rear Air Suspension	C71-1015		...	...		85937	...
		C71-1015 PLUS		...	...		85937	...
		C711015		...	...		85937	...
		C711015 PLUS		...	...		85937	...
16-17	Models with Taper Leaf Springs on Front Axle	B71-1002	O|O	85001	89410		...	...
		B711002	O|O	85001	89410		...	...
2016	Models with 86" Sleepers with O.E.M. Number	T71-1003	O|O	83056				
		T711003	O|O	83056				
	Models with Link Cab Suspension	T71-1002	O|O	83002				
		T711002	O|O	83002				
K100, K100E, K125								
	All with Air Glide 100 Suspension with 8 air bags, 4 units required	K374-29		...	...	–|–	85310	89423

Year Ano Année	Model Modelo Modle	OEM #		Front			Rear	
				Fleetline	GasSLX		Fleetline	GasSLX

KENWORTH (CONT'D)

K100, K100E, K125 (cont'd)

	All with Air Glide 100 Suspension with 8 air bags, 4 units required	K374-32		...	...	−|−	85310	89423
		K37429		...	...	−|−	85310	89423
		K37432		...	...	−|−	85310	89423
	All with Air Glide 200 with 40,000 lb Suspension with 8 air bags, 4 units required	70701		...	...	−|−	85900	...
		665903		...	...	−|−	85900	...
		665944		...	...	−|−	85900	...
	All with Air Glide 200 with 46,000 lb Suspension with 8 air bags, 4 units required	665906		...	...	−|−	85902	...
		665945		...	...	−|−	85902	...
	Models with Dual Steering Front Axle and Torsion Bar Bogey Rear Suspension	K374-4		...	...	o|o	85314	89425
		K374-28		...	...	o|o	85314	89425
		K3744		...	...	o|o	85314	89425
		K37428		...	...	o|o	85314	89425
	Models with Multiple Leaf Springs on Front Axle	B71-1003	o|o	83312	89409		...	...
		B711003	o|o	83312	89409		...	...
		K374-3	o|o	83312	89409		...	...
		K374-33	o|o	83312	89409		...	...
		K3743	o|o	83312	89409		...	...
		K37433	o|o	83312	89409		...	...
	Models with Set Back Front Axle	665331		85740	...		...	...
		K374-13		85740	...		...	...
		K374-13-1		85740	...		...	...
		K37413		85740	...		...	...
		K374131		85740	...		...	...

K300

06-07	All with Air Glide 100 Suspension with 8 air bags, 4 units required	K374-29		...	...	−|−	85310	89423
		K374-32		...	...	−|−	85310	89423
		K37429		...	...	−|−	85310	89423
		K37432		...	...	−|−	85310	89423
06-07	All with Air Glide 200 with 40,000 lb Suspension with 8 air bags, 4 units required	70701		...	...	−|−	85900	...
		665903		...	...	−|−	85900	...
		665944		...	...	−|−	85900	...
06-07	All with Air Glide 200 with 46,000 lb Suspension with 8 air bags, 4 units required	665906		...	...	−|−	85902	...
		665945		...	...	−|−	85902	...
06-07	K300 COE Medium Duty	665565	o|o	85007	...		...	...
06-07	Models with Multiple Leaf Springs on Front Axle (3/4" Mounting bolts)	B71-1003	o|o	83312	89409		...	...
		B711003	o|o	83312	89409		...	...
		K374-3	o|o	83312	89409		...	...
		K374-33	o|o	83312	89409		...	...
		K3743	o|o	83312	89409		...	...
		K37433	o|o	83312	89409		...	...
06-07	Models with Reyco 102 or 79KB Suspension (Drive Axle)	16725-01		...	...	o|o	83126	89430
		19495-01		...	...	o|o	83126	89430
		1672501		...	...	o|o	83126	89430
		1949501		...	...	o|o	83126	89430
06-07	Models with Reyco 1209 or 1212 Suspension (Steer Axle)	19495-01	o|o	83126	89430		...	...
		1949501	o|o	83126	89430		...	...
06-07	Models with Woodhead Shock (Stamping Number ACHB 966)	ACHB966		...	...	−|−	83136	...
2007	Models with Taper Leaf Springs on Front Axle (1" Mounting bolts)	B71-1002	o|o	85001	89410		...	...
		B711002	o|o	85001	89410		...	...
		K374-16	o|o	85001	89410		...	...

KENWORTH (CONT'D)

K300 (cont'd)

Year Ano Année	Model Modelo Modle	OEM #		Front			Rear	
				Fleetline	GasSLX		Fleetline	GasSLX
2007	Models with Taper Leaf Springs on Front Axle (1" Mounting bolts)	K374-26	O|O	85001	89410		...	...
		K374-27	O|O	85001	89410		...	...
		K37416	O|O	85001	89410		...	...
		K37426	O|O	85001	89410		...	...
		K37427	O|O	85001	89410		...	...
	Additional O.E.M. Interchanges	03-08781-2		...	...	–|–	85069	89455
		665092	O|O	83312	89409		...	...
		665118	O|O	83312	89409		...	...
		03087812		...	...	–|–	85069	89455
		3166657	O|O	85700				
		C71-1002-2		...	...	O|O	85067	89451
		C71-1002PLUS-2		...	...	O|O	85067	89451
		C71-1011PLUS-2		...	...	–|–	85069	89455
		C71-6000-2		...	...	O|O	85067	89451
		C711002PLUS2		...	...	O|O	85067	89451
		C711011PLUS2		...	...	–|–	85069	89455
		C7110022		...	...	O|O	85067	89451
		C7160002		...	...	O|O	85067	89451
		K374-3-1	O|O	83312	89409		...	...
		K374-10		...	...	O|O	83215	...
		K374-10-2		...	...	O|O	83215	...
		K37410		...	...	O|O	83215	...
		K37431	O|O	83312	89409		...	...
		K374102		...	...	O|O	83215	...
	All with Air Glide 100 Suspension with 8 air bags, 4 units required	K374C7		...	...	–|–	85310	89423
		K374-C7		...	...	–|–	85310	89423
	Models with Hendrickson Primaax 260 or 520 Rear Air Suspension (10" Ride Height-Drum Brakes only)	60665-013		...	...	O|O	85965	...
		60665013		...	...	O|O	85965	...
	Models with Hendrickson Primaax EX 262 or 522 Rear Air Suspension (10" Ride Height)	60665-013		...	...	O|O	85965	...
		60665013		...	...	O|O	85965	...
	Models with Hendrickson Primaax EX 262S or 522S Rear Air Suspension (10" Ride Height)	60665-011		...	...	O|O	85967	...
		60665011		...	...	O|O	85967	...
	Models with Multiple Leaf Springs on Front Axle	K374-5	O|O	83312	89409		...	...
		K374-14	O|O	83312	89409		...	...
		K3745	O|O	83312	89409		...	...
		K37414	O|O	83312	89409		...	...
	Models with O.E.M. Number	02-0739PLUS-2	O|O	85013	89414		...	...
		02-02736-2	O|O	85302	89420		...	...
		02-02736PLUS-2	O|O	85302	89420		...	...
		02-02737-2	O|O	85062	89408		...	...
		02-02737PLUS-2	O|O	85062	89408		...	...
		02-02738-2	O|O	85012	89413		...	...
		02-02738PLUS-2	O|O	85012	89413		...	...
		02-02739-2	O|O	85013	89414		...	...
		02-02740-2	O|O	85036	89405		...	...
		02-02741-2	O|O	85012	89413		...	...
		02-02742-2	O|O	85062	89408		...	...
		02-04010-2	O|O	85012	89413		...	...
		03-06084PLUS-2		...	...	O|O	85031	...
		03-06084PLUS-2		...	...	–|O	85033	89427
		03-07423-2		...	...	O|O	85031	...
		03-07423-2		...	...	–|O	85033	89427

APPLICATION GUIDE - TRUCKS, TRAILERS AND BUSES

KENWORTH (CONT'D)

Year Ano Année	Model Modelo Modle	OEM #		Front			Rear	
				Fleetline	GasSLX		Fleetline	GasSLX
	Models with O.E.M. Number	03-07423PLUS-2		...	...	O|O	85031	...
		03-07423PLUS-2		...	...	–|O	85033	89427
		03-08350-2		...	...	–|O	85343	...
		10-12032-	O|O	85320	89429		...	...
		16-13947-		...	...	–|O	85319	89428
		020739PLUS2	O|O	85013	89414		...	...
		60670-005PLUS-2		...	...	O|O	83137	...
		60670-008PLUS-2		...	...	O|O	83123	89405
		70701PLUS-2		...	...	–|–	85900	...
		0202736PLUS2	O|O	85302	89420		...	...
		0202738PLUS2	O|O	85012	89413		...	...
		0306084PLUS2		...	...	–|O	85033	89427
		0307423PLUS2		...	...	–|O	85033	89427
		665453	O|O	85001	89410		...	...
		665565PLUS2		...	...	O|O	85007	...
		665565PLUS-2		...	...	O|O	85007	...
		665617-2	O|O	85031	...		...	...
		665670	O|O	85001	89410		...	...
		665680	O|O	83312	89409		...	...
		665738-2	O|O	85910	...		...	...
		665788		...	...	O|O	85000	89436
		665788-2		...	...	O|O	85000	89436
		665828		...	...	O|O	85067	89451
		665858-2	O|O	85070	89459		...	...
		665944-2		...	...	–|–	85900	...
		665945-2		...	...	–|–	85902	...
		671052-2	O|O	85070	89459		...	...
		671962SPL		...	...		85936	89456
		675122	O|O	85001	89410		...	...
		680241		...	...	–|O	85311	89424
		680261-2	O|O	85062	89408		...	...
		680475		...	...	O|O	85314	89425
		680476		...	...	–|–	85310	89423
		680486		...	...	–|–	85310	89423
		680586		...	...	–|O	85311	89424
		2018987C1PLUS2		...	...	O|O	85003	89411
		2018987C1PLUS-2		...	...	O|O	85003	89411
		02027362	O|O	85302	89420		...	...
		2027382	O|O	85012	89413		...	...
		02027392	O|O	85013	89414		...	...
		02027402	O|O	85036	89405		...	...
		02027412	O|O	85012	89413		...	...
		02040102	O|O	85012	89413		...	...
		03074232		...	...	–|O	85033	89427
		03083502		...	...	–|O	85343	...
		6656172	O|O	85031	...		...	...
		6658582	O|O	85070	89459		...	...
		6710522	O|O	85070	89459		...	...
		60670008PLUS2		...	...	O|O	83123	89405
		90044089PLUS-2		...	...	O|O	83124	89407
		1012032002PLUS2	O|O	85320	89429		...	...
		1613947000PLUS2		...	...	–|O	85319	89428
		B71-6000	O|O	85959	...		...	...
		B71-6000-2	O|O	85959	...		...	...
		B71-6002	O|O	85012	89413		...	...

KENWORTH (CONT'D)

Year Ano Année	Model Modelo Modle	OEM #		Front			Rear	
				Fleetline	GasSLX		Fleetline	GasSLX
	Models with O.E.M. Number	B71-6002-2	O|O	85012	89413		...	...
		B71-6003	O|O	85029	...		...	...
		B71-6003-2	O|O	85029	...		...	...
		B71-6007	O|O	85062	89408		...	...
		B71-6008	O|O	83312	89409		...	...
		B71-6010	O|O	85023 or 89415				
		B71-6011	O|O	85062	89408		...	...
		B71-6013	O|O	85012	89413		...	...
		B71-6016	O|O	85012	89413		...	...
		B71-6017	O|O	85910	...		...	...
		B71-6018	O|O	85012	89413		...	...
		B716000	O|O	85959	...		...	...
		B716002	O|O	85012	89413		...	...
		B716003	O|O	85029	...		...	...
		B716007	O|O	85062	89408		...	...
		B716008	O|O	83312	89409		...	...
		B716010	O|O	85023 or 89415				
		B716011	O|O	85062	89408		...	...
		B716013	O|O	85012	89413		...	...
		B716016	O|O	85012	89413		...	...
		B716017	O|O	85910	...		...	...
		B716018	O|O	85012	89413		...	...
		C71-1011SPL		...	...	-|-	85069	89455
		C71-6003		...	...	-|O	85988	...
		C71-6004		...	...	-|O	85343	...
		C71-6005		...	...	-|-	85069	89455
		C711011SPL		...	...	-|-	85069	89455
		C716003		...	...	-|O	85988	...
		C716004		...	...	-|O	85343	...
		C716005		...	...	-|-	85069	89455
		K374-7		...	...	-|-	85310	89423
		K374-9		...	...	-|-	85310	89423
		K374-26-2	O|O	85001	89410		...	...
		K374-26PLUS-2	O|O	85001	89410		...	...
		K374-27-2	O|O	85001	89410		...	...
		K374-28-2		...	...	O|O	85314	89425
		K374-29-2		...	...	-|-	85310	89423
		K374-29PLUS-2		...	...	-|-	85310	89423
		K374-32-2		...	...	-|-	85310	89423
		K374-33-2	O|O	83312	89409		...	...
		K374-33PLUS-2	O|O	83312	89409		...	...
		K374C31	O|O	83312	89409		...	...
		K374-C31	O|O	83312	89409		...	...
		K3747		...	...	-|-	85310	89423
		K3749		...	...	-|-	85310	89423
		K37426PLUS2	O|O	85001	89410		...	...
		K37429PLUS2		...	...	-|-	85310	89423
		K374262	O|O	85001	89410		...	...
		K374272	O|O	85001	89410		...	...
		K374282		...	...	O|O	85314	89425
		K374292		...	...	-|-	85310	89423
		K374322		...	...	-|-	85310	89423
		R71-6008	O|O	83035				
		R716008	O|O	83035				
		S20126		...	...	O|O	85323	89436

APPLICATION GUIDE - TRUCKS, TRAILERS AND BUSES

KENWORTH (CONT'D)

Year Ano Année	Model Modelo Modle	OEM #		Front			Rear	
				Fleetline	GasSLX		Fleetline	GasSLX
	Models with O.E.M. Number	S-20126		...	...	O|O	85323	89436
	Models with Taper Leaf Springs on Front Axle	K374-11	O|O	85001	89410		...	...
		K37411	O|O	85001	89410		...	...
	OE PLUS Shock Stamping Number	02-02736PLUS	O|O	85302	89420		...	...
		02-02737PLUS	O|O	85062	89408		...	...
		02-02738PLUS	O|O	85012	89413		...	...
		02-02739PLUS	O|O	85013	89414		...	...
		03-04176PLUS		...	...	O|O	85308	89422
		03-06084PLUS		...	...	–|O	85033	89427
		03-07421PLUS		...	...	–|O	85311	89424
		03-07423PLUS		...	...	–|O	85033	89427
		10-12032-002PLUS	O|O	85320	89429		...	...
		10-12542-000PLUS	O|O	85901	...		...	...
		16-13947-000PLUS		...	...	–|O	85319	89428
		47902-13PLUS		...	...	O|O	83122	89406
		60670-005PLUS		...	...	O|O	83137	...
		60670-008PLUS		...	...	O|O	83123	89405
		70701PLUS		...	...	–|–	85900	...
		0202736PLUS	O|O	85302	89420		...	...
		0202737PLUS	O|O	85062	89408		...	...
		0202738PLUS	O|O	85012	89413		...	...
		0202739PLUS	O|O	85013	89414		...	...
		0304176PLUS		...	...	O|O	85308	89422
		0306084PLUS		...	...	–|O	85033	89427
		0307421PLUS		...	...	–|O	85311	89424
		0307423PLUS		...	...	–|O	85033	89427
		665565PLUS		...	...	O|O	85007	...
		671962PLUS		...	...		85936	89456
		2018987C1PLUS		...	...	O|O	85003	89411
		4790213PLUS		...	...	O|O	83122	89406
		8086053PLUS		...	...	O|O	85047	89435
		60670005PLUS		...	...	O|O	83137	...
		60670008PLUS		...	...	O|O	83123	89405
		90044025PLUS	O|O	83209	89414		...	...
		90044089PLUS		...	...	O|O	83124	89407
		1012032002PLUS	O|O	85320	89429		...	...
		1012542000PLUS	O|O	85901	...		...	...
		1613947000PLUS		...	...	–|O	85319	89428
		B71-6015	O|O	85012	89413		...	...
		B716015	O|O	85012	89413		...	...
		C71-1002PLUS		...	...	O|O	85067	89451
		C71-1011PLUS		...	...	–|–	85069	89455
		C711002PLUS		...	...	O|O	85067	89451
		C711011PLUS		...	...	–|–	85069	89455
		K374-26PLUS	O|O	85001	89410		...	...
		K374-28PLUS		...	...	O|O	85314	89425
		K374-29PLUS		...	...	–|–	85310	89423
		K374-33PLUS	O|O	83312	89409		...	...
		K37426PLUS	O|O	85001	89410		...	...
		K37428PLUS		...	...	O|O	85314	89425
		K37429PLUS		...	...	–|–	85310	89423
		K37433PLUS	O|O	83312	89409		...	...
	TruckMaster Shock Stamping Number	665632	O|O	85013	89414		...	...
		665633		...	...	–|O	85033	89427
		665783		...	...	O|O	83123	89405

APPLICATION GUIDE - TRUCKS, TRAILERS AND BUSES

Year Ano Année	Model Modelo Modle	OEM #		Front			Rear	
				Fleetline	GasSLX		Fleetline	GasSLX
KENWORTH (CONT'D)								
	TruckMaster Shock Stamping Number	665784		...	...	O|O	83122	89406
		665785		...	...	O|O	83137	...
		665844		...	...	–|–	85069	89455
		665918		...	...	–|–	85900	...
		665926		...	...	O|O	85047	89435
		665927	O|O	85901	...		...	...
		665928	O|O	85062	89408		...	...
		665930	O|O	85001	89410		...	...
		665931	O|O	83312	89409		...	...
		665932	O|O	85012	89413		...	...
		665950		...	...	–|–	85902	...
		671052	O|O	85070	89459		...	...
		671654		...	...		85936	89456
		671699		...	...		85937	...
		671794		...	...	O|O	85067	89451
		680237	O|O	85303	89422		...	...
		680239		...	...	–|–	85310	89423
		680240		...	...	O|O	85302	89420
		680242		...	...	O|O	85308	89422
		680253		...	...	O|O	85314	89425
		680261	O|O	85062	89408		...	...
		680279	O|O	83209	89414		...	...
		680280		...	...	O|O	85906	89407
		680281		...	...	O|O	85003	89411
		680283		85740	...		...	...
		680303		...	...	O|O	85007	...
		680425	O|O	85320	89429		...	...
		680435		...	...	–|O	85033	89427
		680473		...	...	–|O	85319	89428
T300								
	All with Air Glide 100 Suspension with 8 air bags, 4 units required	K374-29		...	...	–|–	85310	89423
		K374-32		...	...	–|–	85310	89423
		K37429		...	...	–|–	85310	89423
		K37432		...	...	–|–	85310	89423
	All with Air Glide 200 with 40,000 lb Suspension with 8 air bags, 4 units required	70701		...	...	–|–	85900	...
		665903		...	...	–|–	85900	...
		665944		...	...	–|–	85900	...
	Models with Hendrickson Rear Air Suspension	4790219		...	...	O|O	83123	89405
		60670004		...	...	O|O	83123	89405
	Models with Multiple Leaf Springs on Front Axle (3/4" Mounting bolts)	B71-1003	O|O	83312	89409		...	...
		B711003	O|O	83312	89409		...	...
		K374-3	O|O	83312	89409		...	...
		K374-33	O|O	83312	89409		...	...
		K3743	O|O	83312	89409		...	...
		K37433	O|O	83312	89409		...	...
	Models with Reyco 102 or 79KB Suspension (Drive Axle) To 2022	16725-01		...	...	O|O	83126	89430
		19495-01		...	...	O|O	83126	89430
		1672501		...	...	O|O	83126	89430
		1949501		...	...	O|O	83126	89430
	Models with Reyco 1209 or 1212 Suspension (Steer Axle) To 2022	19495-01	O|O	83126	89430		...	...
		1949501	O|O	83126	89430		...	...
	Models with Taper Leaf Springs on Front Axle (1" Mounting bolts)	B71-1002	O|O	85001	89410		...	...
		B711002	O|O	85001	89410		...	...
		K374-16	O|O	85001	89410		...	...

Year Ano Année	Model Modelo Modle	OEM #		Front			Rear	
				Fleetline	GasSLX		Fleetline	GasSLX
KENWORTH (CONT'D)								
T300 (cont'd)								
	Models with Taper Leaf Springs on Front Axle (1" Mounting bolts)	K374-26	O|O	**85001**	**89410**		...	...
		K374-27	O|O	**85001**	**89410**		...	...
		K37416	O|O	**85001**	**89410**		...	...
		K37426	O|O	**85001**	**89410**		...	...
		K37427	O|O	**85001**	**89410**		...	...
	Models with Woodhead Shock (Stamping Number ACHB 966)	ACHB966		...	...	–|–	**83136**	...
T400, T400B, T450B								
	All with Air Glide 100 Suspension with 8 air bags, 4 units required	K374-29		...	...	–|–	**85310**	**89423**
		K374-32		...	...	–|–	**85310**	**89423**
		K37429		...	...	–|–	**85310**	**89423**
		K37432		...	...	–|–	**85310**	**89423**
	All with Air Glide 200 with 40,000 lb Suspension with 8 air bags, 4 units required	70701		...	...	–|–	**85900**	...
		665903		...	...	–|–	**85900**	...
		665944		...	...	–|–	**85900**	...
	All with Air Glide 200 with 46,000 lb Suspension with 8 air bags, 4 units required	665906		...	...	–|–	**85902**	...
		665945		...	...	–|–	**85902**	...
	Models with Multiple Leaf Springs on Front Axle	B71-1003	O|O	**83312**	**89409**		...	...
		B711003	O|O	**83312**	**89409**		...	...
		K374-3	O|O	**83312**	**89409**		...	...
		K374-33	O|O	**83312**	**89409**		...	...
		K3743	O|O	**83312**	**89409**		...	...
		K37433	O|O	**83312**	**89409**		...	...
	Models with Torsion Bar Bogey (2 rear axles) and KW Air Ride Suspension (with 4 air bags)	K374-4		...	...	O|O	**85314**	**89425**
		K374-28		...	...	O|O	**85314**	**89425**
		K3744		...	...	O|O	**85314**	**89425**
		K37428		...	...	O|O	**85314**	**89425**
T400A								
10-20	Models with Link Cabmate KWB689-B or KWB689-C Air Suspension From 5/92	1201-1043	O|O	**83025**				
		12011043	O|O	**83025**				
10-20	Models with Link Cabmate KWB689-B or KWB689-C Air Suspension From 06/92	1202-1043	O|O	**83025**				
		12021043	O|O	**83025**				
10-21	Models with Link Cabmate Air Suspension KWB689-A with rear cab support Kenworth P/N K235-1646	1202-0012	O|O	**83023**				
		12020012	O|O	**83023**				
92-99	Models with Link Cabmate Air Suspension KWB689-A with rear cab support Kenworth P/N K235-1646	1202-0012	O|O	**83023**				
		12020012	O|O	**83023**				
92-99	Models with Link Cabmate KWB689-B or KWB689-C Air Suspension From 5/92	1201-1043	O|O	**83025**				
		12011043	O|O	**83025**				
92-99	Models with Link Cabmate KWB689-B or KWB689-C Air Suspension From 06/92	1202-1043	O|O	**83025**				
		12021043	O|O	**83025**				
	Models with Link Cabmate KWB400-A Air Suspension	1202-0012	O|O	**83023**				
		12020012	O|O	**83023**				
T440								
12-16	Models with Neway AD-123 or AD-246 Models Air Suspension with	90045099		...	...	O|O	**85906**	**89407**
		90045132		...	...	O|O	**85909**	...
12-17	Models with Hendrickson HAS - 230 Rear Air Suspension	60670-005		...	...	O|O	**83137**	...
		60670005		...	...	O|O	**83137**	...

KENWORTH (CONT'D)

T440 (cont'd)

Year Ano Année	Model Modelo Modle	OEM #		Front			Rear	
				Fleetline	GasSLX		Fleetline	GasSLX
12-17	Models with Hendrickson Primaax EX 262S or 522S Rear Air Suspension (10" Ride Height)	60665-011		...	...	○|○	85967	...
		60665011		...	...	○|○	85967	...
12-19	Models with Air Glide 400 (AG400) Rear Air Suspension	671962		...	...		85936	89456
		C71-1014		...	...		85936	89456
		C711014		...	...		85936	89456
12-20	Models with Air Glide 460 (AG460) Rear Air Suspension	671963		...	...		85937	...
		C71-1015		...	...		85937	...
		C71-1015 PLUS		...	...		85937	...
		C711015		...	...		85937	...
		C711015 PLUS		...	...		85937	...
12-20	Models with Hendrickson Primaax 230, 460 and 690 Air Suspension (8-1/2" to 10" Ride Height)	60657-003		...	...	○|○	85072	...
		60657-003L		...	...	○|○	85072	...
		60657003		...	...	○|○	85072	...
		60657003L		...	...	○|○	85072	...
12-20	Models with Hendrickson Primaax EX 232, 462 and 692 Air Suspension (8-1/2" to 10" Ride Height)	60657-003		...	...	○|○	85072	...
		60657-003L		...	...	○|○	85072	...
		60657003		...	...	○|○	85072	...
		60657003L		...	...	○|○	85072	...
11-21	Models with Air Glide 400L (AG400L) Rear Air Suspension	C71-1011		...	...	–|–	85069	89455
		C71-1017		...	...	–|–	85069	89455
		C711011		...	...	–|–	85069	89455
		C711017		...	...	–|–	85069	89455
12-21	Models with Air Glide 380 (AG380) Rear Air Suspension	C71-1002		...	...	○|○	85067	89451
		C71-1016		...	...	○|○	85067	89451
		C71-6015		...	...	○|○	85067	89451
		C711002		...	...	○|○	85067	89451
		C711016		...	...	○|○	85067	89451
		C716015		...	...	○|○	85067	89451
12-21	Models with Chalmers 40,000 lb Rear Suspension	665174		...	...	○|○	85060	...
12-21	Models with Neway ADZ Rear Suspension	90045605		...	...	○|○	85109	...
		90045803		...	...	○|○	85109	...
		90045812		...	...	○|○	85109	...
		471700004423		...	...	○|○	85109	...
		471700013186		...	...	○|○	85109	...
12-22	Models with 12,000 to 20,000 lb Taperleaf Front Suspension	665858	○|○	85070	89459		...	...
		B71-1001	○|○	85070	89459		...	...
		B711001	○|○	85070	89459		...	...
12-22	Models with 21,000 to 23,000 lb Reyco Spring Suspension	19495-01		...	...	○|○	83126	89430
		1949501		...	...	○|○	83126	89430
		TK19679		...	...	○|○	83126	89430
12-22	Models with Hendrickson HMX 400/460 Haulmax with 16.5" Saddle	60680-004		...	...		83143	...
		60680-004L		...	...		83143	...
		60680004		...	...		83143	...
		60680004L		...	...		83143	...
12-22	Models with Hendrickson HMX 400/460 Haulmax with 17.5" & 18.5" Saddle	60680-005		...	...		83142	...
		60680-005L		...	...		83142	...
		60680005		...	...		83142	...
		60680005L		...	...		83142	...
12-22	Models with Reyco 102 or 79KB Suspension (Drive Axle)	16725-01		...	...	○|○	83126	89430
		19495-01		...	...	○|○	83126	89430
		1672501		...	...	○|○	83126	89430
		1949501		...	...	○|○	83126	89430

Year Ano Année	Model Modelo Modle	OEM #		Front			Rear	
				Fleetline	GasSLX		Fleetline	GasSLX
KENWORTH (CONT'D)								
T440 (cont'd)								
	Models with Link Cabmate KWB689-D and Severe service crossmembers	1201-1046	O|O	**83049**				
		1202-1046	O|O	**83049**				
		1202K046	O|O	**83049**				
		12011046	O|O	**83049**				
		12021046	O|O	**83049**				
		R71-1004	O|O	**83049**				
		R711004	O|O	**83049**				
T450								
1992	Models with Link Cabmate Air Suspension KWB689-A with rear cab support Kenworth P/N K235-1646	1202-0012	O|O	**83023**				
		12020012	O|O	**83023**				
1992	Models with Link Cabmate KWB689-B or KWB689-C Air Suspension From 5/92	1201-1043	O|O	**83025**				
		12011043	O|O	**83025**				
1992	Models with Link Cabmate KWB689-B or KWB689-C Air Suspension From 06/92	1202-1043	O|O	**83025**				
		12021043	O|O	**83025**				
	Models with Link Cabmate KWB400-A Air Suspension	1202-0012	O|O	**83023**				
		12020012	O|O	**83023**				
	Models with Link Cabmate KWB689-D and Severe service crossmembers	1202K046	O|O	**83049**				
		R71-1004	O|O	**83049**				
		R711004	O|O	**83049**				
T470								
10-16	Models with Air Glide 230 (AG230) Rear Air Suspension	671656		...	...		**85985**	...
		C71-1013		...	...		**85985**	...
		C711013		...	...		**85985**	...
10-16	Models with Hendrickson HAS - 230 Rear Air Suspension	60670-005		...	...	O|O	**83137**	...
		60670005		...	...	O|O	**83137**	...
10-16	Models with Neway AD-123 or AD-246 Models Air Suspension with	90045099		...	...	O|O	**85906**	**89407**
		90045132		...	...	O|O	**85909**	...
10-17	Models with Air Glide 400 (AG400) Rear Air Suspension	671962		...	...		**85936**	**89456**
		C71-1014		...	...		**85936**	**89456**
		C711014		...	...		**85936**	**89456**
10-18	Models with Chalmers 40,000 lb Rear Suspension	665174		...	...	O|O	**85060**	...
10-19	Models with Air Glide 380 (AG380) Rear Air Suspension	C71-1002		...	...	O|O	**85067**	**89451**
		C71-1016		...	...	O|O	**85067**	**89451**
		C71-6015		...	...	O|O	**85067**	**89451**
		C711002		...	...	O|O	**85067**	**89451**
		C711016		...	...	O|O	**85067**	**89451**
		C716015		...	...	O|O	**85067**	**89451**
10-19	Models with Air Glide 460 (AG460) Rear Air Suspension	671963		...	...		**85937**	...
		C71-1015		...	...		**85937**	...
		C71-1015 PLUS		...	...		**85937**	...
		C711015		...	...		**85937**	...
		C711015 PLUS		...	...		**85937**	...
10-19	Models with Hendrickson HMX 400/460 Haulmax with 16.5" Saddle	60680-004		...	...		**83143**	...
		60680-004L		...	...		**83143**	...
		60680004		...	...		**83143**	...
		60680004L		...	...		**83143**	...
10-19	Models with Hendrickson HMX 400/460 Haulmax with 17.5" & 18.5" Saddle	60680-005		...	...		**83142**	...
		60680-005L		...	...		**83142**	...
		60680005		...	...		**83142**	...
		60680005L		...	...		**83142**	...

Year Ano Année	Model Modelo Modle	OEM #		Front			Rear	
				Fleetline	GasSLX		Fleetline	GasSLX
KENWORTH (CONT'D)								
T470 (cont'd)								
10-19	Models with Hendrickson Primaax 230, 232, 460, 462, 690 and 692 Air Suspension (8-1/2" to 10" Ride Height)	60657-003		...	...	O|O	85072	...
		60657-003L		...	...	O|O	85072	...
		60657003		...	...	O|O	85072	...
		60657003L		...	...	O|O	85072	...
10-20	Models with Neway ADZ Rear Suspension	90045605		...	...	O|O	85109	...
		90045803		...	...	O|O	85109	...
		90045812		...	...	O|O	85109	...
		471700004423		...	...	O|O	85109	...
		471700013186		...	...	O|O	85109	...
10-21	Models with 12,000 to 20,000 lb Taperleaf Front Suspension	665858	O|O	85070	89459		...	...
		B71-1001	O|O	85070	89459		...	...
		B711001	O|O	85070	89459		...	...
10-21	Models with Air Glide 400L (AG400L) Rear Air Suspension	C71-1011		...	...	-|-	85069	89455
		C71-1017		...	...	-|-	85069	89455
		C711011		...	...	-|-	85069	89455
		C711017		...	...	-|-	85069	89455
10-21	Models with Reyco 102 or 79KB Suspension (Drive Axle)	16725-01		...	...	O|O	83126	89430
		19495-01		...	...	O|O	83126	89430
		1672501		...	...	O|O	83126	89430
		1949501		...	...	O|O	83126	89430
		TK19679		...	...	O|O	83126	89430
T600,T600B, T602								
01-07	Models with Air Glide 380 (AG380) Rear Air Suspension	C71-1002		...	...	O|O	85067	89451
		C71-1016		...	...	O|O	85067	89451
		C711002		...	...	O|O	85067	89451
		C711016		...	...	O|O	85067	89451
T600, T600A, T600B, T602								
	All with Air Glide 100 Suspension with 8 air bags, 4 units required	K374-29		...	...	-|-	85310	89423
		K374-32		...	...	-|-	85310	89423
		K37429		...	...	-|-	85310	89423
		K37432		...	...	-|-	85310	89423
	All with Air Glide 200 with 40,000 lb Suspension with 8 air bags, 4 units required	70701		...	...	-|-	85900	...
		665903		...	...	-|-	85900	...
		665944		...	...	-|-	85900	...
	All with Air Glide 200 with 46,000 lb Suspension with 8 air bags, 4 units required	665906		...	...	-|-	85902	...
		665945		...	...	-|-	85902	...
	Models with Hendrickson Rear Air Suspension	47902-24		...	...	O|O	83137	...
		4790224		...	...	O|O	83137	...
	Models with Multiple Leaf Springs on Front Axle	B71-1003	O|O	83312	89409		...	...
		B711003	O|O	83312	89409		...	...
		K374-3	O|O	83312	89409		...	...
		K374-33	O|O	83312	89409		...	...
		K3743	O|O	83312	89409		...	...
		K37433	O|O	83312	89409		...	...
	Models with Reyco 102 or 79KB Suspension (Drive Axle)	16725-01		...	...	O|O	83126	89430
		19495-01		...	...	O|O	83126	89430
		1672501		...	...	O|O	83126	89430
		1949501		...	...	O|O	83126	89430
	Models with Reyco 1209 or 1212 Suspension (Steer Axle) To 2007	19495-01	O|O	83126	89430		...	...
		1949501	O|O	83126	89430		...	...

Year Ano Année	Model Modelo Modle	OEM #		Front			Rear	
				Fleetline	GasSLX		Fleetline	GasSLX
KENWORTH (CONT'D)								
T600, T600B, T602								
01-07	Models with Air Glide 400 (AG400) Rear Air Suspension	671962		...	...		85936	89456
		C71-1014		...	...		85936	89456
		C711014		...	...		85936	89456
05-07	Models with 13,000 lb Front Axle	665858	O|O	85070	89459		...	...
		B71-1001	O|O	85070	89459		...	...
		B711001	O|O	85070	89459		...	...
T600A								
	Models with Link Cabmate KWB689-A Air Suspension and rear cab mount Kenworth P/N K235-1436 or K235-1488	1202-0012	O|O	83023				
		12020012	O|O	83023				
	Models with Link Cabmate KWB689-B or KWB689-C Air Suspension and rear cab mount Kenworth part # K235-1436 or K235-1488	1201-1043	O|O	83025				
		1202-1043	O|O	83025				
		12011043	O|O	83025				
		12021043	O|O	83025				
	Models with Link Cabmate KWB689-D and Severe service crossmembers	1202K046	O|O	83049				
		R71-1004	O|O	83049				
		R711004	O|O	83049				
T660								
	Carhauler with O.E.M. Number	K374-36	O|O	89432	...		...	...
		K37436	O|O	89432	...		...	...
T700								
2016	Models with 13,000 lb Front Axle	665858	O|O	85070	89459		...	...
		B71-1001	O|O	85070	89459		...	...
		B711001	O|O	85070	89459		...	...
2016	Models with Air Glide 230 (AG230) Rear Air Suspension	671656		...	...		85985	...
		C71-1013		...	...		85985	...
		C711013		...	...		85985	...
2016	Models with Air Glide 380 (AG380) Rear Air Suspension	C71-1002		...	...	O|O	85067	89451
		C71-1016		...	...	O|O	85067	89451
		C71-6015		...	...	O|O	85067	89451
		C711002		...	...	O|O	85067	89451
		C711016		...	...	O|O	85067	89451
		C716015		...	...	O|O	85067	89451
2016	Models with Air Glide 400 (AG400) Rear Air Suspension	671962		...	...		85936	89456
		C71-1014		...	...		85936	89456
		C711014		...	...		85936	89456
2016	Models with Extended Sleeper Cab	1202-1064	O|O	83024				
		1202K064	O|O	83024				
		12021064	O|O	83024				
		R71-1005	O|O	83024				
		R711005	O|O	83024				
T800								
	Models with Link Cabmate KWB689-A Air Suspension and rear cab mount Kenworth P/N K235-1436 or K235-1488	1202-0012	O|O	83023				
		12020012	O|O	83023				
	Models with Link Cabmate KWB689-B or KWB689-C Air Suspension and rear cab mount Kenworth part # K235-1436 or K235-1488	1201-1043	O|O	83025				
		1202-1043	O|O	83025				
		12011043	O|O	83025				
		12021043	O|O	83025				
	Models with Link Cabmate KWMC642 Air Suspension	1202-0054	O|O	83021				

Year Ano Année	Model Modelo Modle	OEM #		Front			Rear	
				Fleetline	GasSLX		Fleetline	GasSLX
KENWORTH (CONT'D)								
T800 (cont'd)								
	Models with Link Cabmate KWMC642 Air Suspension	12020054	O|O	**83021**				
T800, T800B, T800B(8X4), T800SH, T800H, T800W								
10-21	Models with Air Glide 400 (AG400) Rear Air Suspension	671962		...	...		**85936**	**89456**
		C71-1014		...	...		**85936**	**89456**
		C711014		...	...		**85936**	**89456**
	All with Air Glide 100 Suspension with 8 air bags, 4 units required	K374-29		...	...	−|−	**85310**	**89423**
		K374-32		...	...	−|−	**85310**	**89423**
		K37429		...	...	−|−	**85310**	**89423**
		K37432		...	...	−|−	**85310**	**89423**
	All with Air Glide 200 with 40,000 lb Suspension with 8 air bags, 4 units required	70701		...	...	−|−	**85900**	...
		665903		...	...	−|−	**85900**	...
		665944		...	...	−|−	**85900**	...
	All with Air Glide 200 with 46,000 lb Suspension with 8 air bags, 4 units required	665906		...	...	−|−	**85902**	...
		665945		...	...	−|−	**85902**	...
	Models with Hendrickson Rear Air Suspension	47902-24		...	...	O|O	**83137**	...
		4790224		...	...	O|O	**83137**	...
	Models with Multiple Leaf Springs on Front Axle	B71-1003	O|O	**83312**	**89409**		...	...
		B711003	O|O	**83312**	**89409**		...	...
		K374-3	O|O	**83312**	**89409**		...	...
		K374-33	O|O	**83312**	**89409**		...	...
		K3743	O|O	**83312**	**89409**		...	...
		K37433	O|O	**83312**	**89409**		...	...
	Models with Neway Rear Air Suspension	90044089		...	...	O|O	**83124**	**89407**
	Models with Neway Rear Air Suspension (AD123-, AD246-) To 2018	90045132		...	...	O|O	**85909**	...
	Models with Torsion Bar Bogey (2 rear axles) and KW Air Ride Suspension (with 4 air bags)	K374-4		...	...	O|O	**85314**	**89425**
		K374-28		...	...	O|O	**85314**	**89425**
		K3744		...	...	O|O	**85314**	**89425**
		K37428		...	...	O|O	**85314**	**89425**
T800B, T800B(8X4), T800SH, T800H, T800W								
00-09	Models with Chalmers 40,000 lb Rear Suspension	665174		...	...	O|O	**85060**	...
01-09	Models with Air Glide 380 (AG380) Rear Air Suspension	C71-1002		...	...	O|O	**85067**	**89451**
		C71-1016		...	...	O|O	**85067**	**89451**
		C71-6015		...	...	O|O	**85067**	**89451**
		C711002		...	...	O|O	**85067**	**89451**
		C711016		...	...	O|O	**85067**	**89451**
		C716015		...	...	O|O	**85067**	**89451**
06-09	Models with Air Glide 230 (AG230) Rear Air Suspension	671656		...	...		**85985**	...
		C71-1013		...	...		**85985**	...
		C711013		...	...		**85985**	...
07-09	Models with Air Glide 400 (AG400) Rear Air Suspension	671962		...	...		**85936**	**89456**
		C71-1014		...	...		**85936**	**89456**
		C711014		...	...		**85936**	**89456**
T880								
	With Hendrickson Rear Suspension	60675-017		...	...	O|O	**85979**	...
		60675017		...	...	O|O	**85979**	...
T2000								
	Models with Multiple Leaf Springs on Front Axle	B71-1003	O|O	**83312**	**89409**		...	...

APPLICATION GUIDE - TRUCKS, TRAILERS AND BUSES

Year Ano Année	Model Modelo Modle	OEM #		Front			Rear	
				Fleetline	GasSLX		Fleetline	GasSLX
KENWORTH (CONT'D)								
T2000 (cont'd)								
	Models with Multiple Leaf Springs on Front Axle	B711003	O|O	**83312**	**89409**		...	...
		K374-3	O|O	**83312**	**89409**		...	...
		K374-33	O|O	**83312**	**89409**		...	...
		K3743	O|O	**83312**	**89409**		...	...
		K37433	O|O	**83312**	**89409**		...	...
W900								
	Models with Link Cabmate KWB689-A Air Suspension and rear cab mount Kenworth P/N K235-1436 or K235-1488	1202-0012	O|O	**83023**				
		12020012	O|O	**83023**				
	Models with Link Cabmate KWB689-B or KWB689-C Air Suspension and rear cab mount Kenworth part # K235-1436 or K235-1488	1201-1043	O|O	**83025**				
		1202-1043	O|O	**83025**				
		12011043	O|O	**83025**				
		12021043	O|O	**83025**				
	Models with Link Cabmate KWMC642 Air Suspension	1202-0054	O|O	**83021**				
		12020054	O|O	**83021**				
W900, W900B, W900L, W900S								
05-21	Models with Air Glide 400 (AG400) Rear Air Suspension	671962		...	...		**85936**	**89456**
		C71-1014		...	...		**85936**	**89456**
		C711014		...	...		**85936**	**89456**
2010	Models with 46,000 lb Neway Rear Air Suspension	90045132		...	...	O|O	**85909**	...
	All with Air Glide 100 Suspension with 8 air bags, 4 units required	K374-29		...	...	–|–	**85310**	**89423**
		K374-32		...	...	–|–	**85310**	**89423**
		K37429		...	...	–|–	**85310**	**89423**
		K37432		...	...	–|–	**85310**	**89423**
	All with Air Glide 200 with 40,000 lb Suspension with 8 air bags, 4 units required	70701		...	...	–|–	**85900**	...
		665903		...	...	–|–	**85900**	...
		665944		...	...	–|–	**85900**	...
	All with Air Glide 200 with 46,000 lb Suspension with 8 air bags, 4 units required	665906		...	...	–|–	**85902**	...
		665945		...	...	–|–	**85902**	...
	Carhauler with O.E.M. Number	K374-36	O|O	**89432**	...		...	...
		K37436	O|O	**89432**	...		...	...
	Models with 18,000 lb to 23,000 lb Taperleaf Front Spring Suspension and Set Forward Front Axle. To 2020	B71-6011	O|O	**85062**	**89408**		...	...
		B716011	O|O	**85062**	**89408**		...	...
	Models with Hendrickson Rear Air Suspension	47902-24		...	...	O|O	**83137**	...
		4790224		...	...	O|O	**83137**	...
	Models with Multiple Leaf Springs on Front Axle	B71-1003	O|O	**83312**	**89409**		...	...
		B711003	O|O	**83312**	**89409**		...	...
		K374-3	O|O	**83312**	**89409**		...	...
		K374-33	O|O	**83312**	**89409**		...	...
		K3743	O|O	**83312**	**89409**		...	...
		K37433	O|O	**83312**	**89409**		...	...
	Models with Reyco 102 or 79KB Suspension (Drive Axle) To 2022	16725-01		...	...	O|O	**83126**	**89430**
		19495-01		...	...	O|O	**83126**	**89430**
		1672501		...	...	O|O	**83126**	**89430**
		1949501		...	...	O|O	**83126**	**89430**
	Models with Reyco 1209 or 1212 Suspension (Steer Axle) To 2022	19495-01	O|O	**83126**	**89430**		...	...
		1949501	O|O	**83126**	**89430**		...	...
	Models with Torsion Bar Bogey (2 rear axles) and KW Air Ride Suspension (with 4 air bags)	K374-4		...	...	O|O	**85314**	**89425**
		K374-28		...	...	O|O	**85314**	**89425**

Year Ano Année	Model Modelo Modle	OEM #		Front			Rear	
				Fleetline	GasSLX		Fleetline	GasSLX
KENWORTH (CONT'D)								
W900, W900B, W900L, W900S (cont'd)								
	Models with Torsion Bar Bogey (2 rear axles) and KW Air Ride Suspension (with 4 air bags)	K3744		...	...	○|○	85314	89425
		K37428		...	...	○|○	85314	89425
W900B, W900L, W900S								
01-21	Models with Air Glide 380 (AG380) Rear Air Suspension	C71-1002		...	...	○|○	85067	89451
		C71-1016		...	...	○|○	85067	89451
		C71-6015		...	...	○|○	85067	89451
		C711002		...	...	○|○	85067	89451
		C711016		...	...	○|○	85067	89451
		C716015		...	...	○|○	85067	89451
KENWORTH CAB SHOCKS								
T2000								
	Models with PowerPacker Cab Suspension prior to 6/28/98 To 6/98	96027-10545	○|○	83011				
		9602710545	○|○	83011				
KIMBLE MIXER CO								
	Rear Discharge Mixers with Self - Steering Axle Shock	T91-00002-00		...	...	○|○	646155	...
		T910000200		...	...	○|○	646155	...
REAR DISCHARGE MIXERS								
	w/ Self Steering Axle Shock & w/ O.E.M. Number	OE10455	○|○	646155				
KING OF THE ROAD								
CLASS A MOTORHOMES								
04-06	Genesis Series MotorHomes with Freightliner XC Chassis	16-16736-000		...	...	○|○	85029	...
		16-16737-000	○|○	83160	...		...	...
		16-16873-000		...	...	○|○	85029	...
		16-16874-000	○|○	83160	...		...	...
		16-18103-000	−|−	85900	...		...	...
		1616736000		...	...	○|○	85029	...
		1616737000	○|○	83160	...		...	...
		1616873000		...	...	○|○	85029	...
		1616874000	○|○	83160	...		...	...
		1618103000	−|−	85900	...		...	...
		141700131809		...	...	○|○	85029	...
		141700131810	○|○	83160	...		...	...
		481700000493	−|−	85900	...		...	...
KRYSTAL BUS								
	Krystal E-450 Shuttle bus To 2020	ASH1136		...	...	−|○	G63623	...
		ASH1154	−|○	G63622	...		...	...
		ASH-1136		...	...	−|○	G63623	...
		ASH-1154	−|○	G63622	...		...	...
KWK-LOC (JIFFLOX)								
	Truck Dolly	522217	○|○	85315	...		...	...
		CP5222	○|○	85315	...		...	...
		CP-5222	○|○	85315	...		...	...
LEYLAND TRUCK								
	Models with Air Trac Suspension (38000 or 40000 lb)	1456033		...	...	−|○	85311	89424

APPLICATION GUIDE - TRUCKS, TRAILERS AND BUSES

Year Ano Année	Model Modelo Modle	OEM #		Front			Rear	
				Fleetline	GasSLX		Fleetline	GasSLX
LGE COACHWORKS								
	All Shuttle buses with Ford E350 and E450 Chassis To 2020	ASH-1136		...	...	−|○	G63623	...
	All Shuttle buses with Ford E350 and E450 Chassis To 2022	ASH-1154	−|○	G63622	...		...	...
LINK/HIGH-STEER								
	9000 Steering Stabilizer	1210-0007	○|○	665937				
		1210-0009	○|○	665937				
	Models with O.E.M. Number	1210-0001	○|○	646155				
		1210-0002	○|○	632147				
		1210-0010	○|○	646155				
		1210-0012	○|○	646155				
		646168	○|○	646155				
LINK MANUFACTURING CAB SHOCKS								
	Models with Link Cab Suspension	1201-1212		83013				
		1201-1213	−|−	83005				
		1202-1212		83013				
		1202-1213	−|−	83005				
		12011212		83013				
		12011213	−|−	83005				
		12021212		83013				
		12021213	−|−	83005				
LINK MANUFACTURING LTD.								
	6000 Steering Stabilizer	632155	○|○	646177				
	Models with Link Cabmate Suspensions with O.E.M. Number	1201-9007	○|○	83054				
		1201-9008	○|○	83054				
		1201-9009	○|○	83054				
		12019007	○|○	83054				
		12019008	○|○	83054				
		12019009	○|○	83054				
	Models with Link Cab Suspension	1201-0012	○|○	83023				
		1201-0254	○|○	83051				
		1201-1043	○|○	83025				
		1201-1044	○|○	83025				
		1201-1046	○|○	83049				
		1201-1049	○|○	83025				
		1201-9010	○|○	83053				
		1201-9011	○|○	83053				
		1201-9013		83062				
		1201-9014		83062				
		1201-9018		83062				
		1201-9021		83062				
		1202-0012	○|○	83023				
		1202-0032	○|○	83016				
		1202-0042	○|○	83025				
		1202-0043	○|○	83025				
		1202-0044	○|○	83025				
		1202-1042	○|○	83025				
		1202-1043	○|○	83025				
		1202-1044	○|○	83025				
		1202-1046	○|○	83049				
		1202-1064	○|○	83024				
		1202-1065	○|○	83002				
		1202-1164	○|○	83031				
		1202-1286	○|○	83056				
		1202K065	○|○	83002				

LINK MANUFACTURING LTD. (CONT'D)

Year Ano Année	Model Modelo Modle	OEM #	Front Fleetline	Front GasSLX	Rear Fleetline	Rear GasSLX
	Models with Link Cab Suspension	1202K164	83031			
		1202K264	83031			
		1202K286	83056			
		632129	83023			
		635705	83016			
		654799	83025			
		654811	83024			
		654847	83002			
		654849	83031			
		654867	83025			
		12010012	83023			
		12010154	83051			
		12010254	83051			
		12011043	83025			
		12011044	83025			
		12011046	83049			
		12011049	83025			
		12019010	83053			
		12019011	83053			
		12019013	83062			
		12019014	83062			
		12019018	83062			
		12019021	83062			
		12020012	83023			
		12020032	83016			
		12020042	83025			
		12020043	83025			
		12020044	83025			
		12021042	83025			
		12021043	83025			
		12021044	83025			
		12021046	83049			
		12021064	83024			
		12021065	83002			
		12021164	83031			
		12021286	83056			
		LG40450	83016			
		LG40470	83016			
		R71-1004	83049			
		R71-1005	83024			
		R711004	83049			
		R711005	83024			
		T71-1000	83031			
		T71-1001	83031			
		T71-1002	83002			
		T711000	83031			
		T711001	83031			
		T711002	83002			
	Models with O.E.M. Number	1202-0052	83021			
		1202-0054	83021			
		1210-0005	...	...	85734	...
		654669	83021			
		654833	83021			
		671093	...	...	85043	...
		12020052	83021			

APPLICATION GUIDE - TRUCKS, TRAILERS AND BUSES

Year Ano Année	Model Modelo Modle	OEM #		Front			Rear	
				Fleetline	GasSLX		Fleetline	GasSLX
LINK MANUFACTURING LTD. (CONT'D)								
	Models with O.E.M. Number	12020054	O|O	83021				
		12100005		...	...	O|O	85734	...
	Sterling Models with Link Rear Air Suspension	1210-0528		...	...	O|O	85043	...
		12100528		...	...	O|O	85043	...
LION BUS								
	Bus Chassis With Hendrickson HTS 210 Suspension (Type C School Bus Applications)	60665-025		...	...	O|O	85036	89405
		60665-025L		...	...	O|O	85036	89405
		60665025		...	...	O|O	85036	89405
		60665025L		...	...	O|O	85036	89405
	Buses with Hendrickson Softek Suspension with Drum and Disc Brakes	58913-009	O|O	85959	...		...	...
		58913-009L	O|O	85959	...		...	...
		58913009	O|O	85959	...		...	...
		58913009L	O|O	85959	...		...	...
LION ELECTRIC								
LION 6								
	Electric Truck Models with Hendrickson Comfort Air Suspension (21K Capacity)	60670-018		...	...	O|O	83166	...
		60670-018L		...	...	O|O	83166	...
		60670018		...	...	O|O	83166	...
		60670018L		...	...	O|O	83166	...
LION 8								
	Electric Truck Models with Hendrickson Comfort Air Suspension (21K Capacity)	60670-018		...	...	O|O	83166	...
		60670-018L		...	...	O|O	83166	...
		60670018		...	...	O|O	83166	...
		60670018L		...	...	O|O	83166	...
LODAL, INC.								
	Refuse Truck	9960257	O|O	83122	89406		...	...
LONDON MIXER								
	Rear Discharge Mixers with Self - Steering Axle Shock	MB-37737-30	O|O	646155				
MACK								
ANTHEM								
18-20	Anthem 64T Models with 13,200 lb Front Axles	21436096	O|O	85098	89502		...	...
		141700005839	O|O	85098	89502		...	...
18-20	Anthem 64T Models with 40,000 lb Rear Air Suspensions	22202560		...	...	O|O	85088	...
		471700009647		...	...	O|O	85088	...
18-21	Anthem 64T Models with Hendrickson HAS 400 or 460 Series Rear Suspension	60675-001		...	...	O|O	85978	...
		60675-001L		...	...	O|O	85978	...
		8083872		...	...	O|O	85978	...
		60675001		...	...	O|O	85978	...
		60675001L		...	...	O|O	85978	...
18-21	Anthem 64T Sleeper Cab Models with O.E.M. Number	23030654	O|O	83910				
		23327756	O|O	83910				
18-21	Models with Hendrickson HN - 522 Rear Suspension	60680-003		...	...		83112	...
		60680-003L		...	...		83112	...
		60680003		...	...		83112	...
		60680003L		...	...		83112	...
21-22	Anthem 64T Models with 13,200 to 14,600 lb Front Axles	23292028	O|O	85061	89450		...	...
18-23	Anthem 64T Day Cab Models with O.E.M. Number	23145372	O|O	83066				

APPLICATION GUIDE - TRUCKS, TRAILERS AND BUSES

Year Ano Année	Model Modelo Modle	OEM #		Front			Rear	
				Fleetline	GasSLX		Fleetline	GasSLX
MACK (CONT'D)								
ANTHEM (cont'd)								
18-23	Models with Hendrickson HMX 400/460 Haulmax with 16.5" Saddle	60680-004		...	...		**83143**	...
		60680-004L		...	...		**83143**	...
		60680004		...	...		**83143**	...
		60680004L		...	...		**83143**	...
		H60680004		...	...		**83143**	...
18-23	Models with Hendrickson HMX 400/460 Haulmax with 17.5" & 18.5" Saddle	14QK5142		...	...		**83142**	...
		14QK-5142		...	...		**83142**	...
		60680-005		...	...		**83142**	...
		60680-005L		...	...		**83142**	...
		25626196		...	...		**83142**	...
		60680005		...	...		**83142**	...
		60680005L		...	...		**83142**	...
		H60680005		...	...		**83142**	...
21-23	Anthem 64T Models with 12,000 to 12,500 lb Front Axles	23292027	○|○	**85061**	**89450**		...	...
21-23	Anthem 64T Models with O.E.M. Number	23159760		...	...	○|○	**85188**	...
		23159762		...	...	○|○	**85188**	...
CH								
89-05	CH600 Models with 12000 lb Taperleaf Spring	14QK392AM	○|○	**85005**	**89430**		...	...
		14QK392AM3	○|○	**85005**	**89430**		...	...
		14QK392BM	○|○	**85005**	**89430**		...	...
		14QK392BM3	○|○	**85005**	**89430**		...	...
		14QK396	○|○	**85005**	**89430**		...	...
		14QK396M	○|○	**85005**	**89430**		...	...
		14QK-392AM	○|○	**85005**	**89430**		...	...
		14QK-392AM3	○|○	**85005**	**89430**		...	...
		14QK-392BM	○|○	**85005**	**89430**		...	...
		14QK-392BM3	○|○	**85005**	**89430**		...	...
		14QK-396	○|○	**85005**	**89430**		...	...
		14QK-396M	○|○	**85005**	**89430**		...	...
		25625743	○|○	**85005**	**89430**		...	...
89-05	CH600 Models with AL Suspension	14QK393M		...	...	○|○	**85010**	...
		14QK-393M		...	...	○|○	**85010**	...
89-05	CH600 Models with ALV Hendrickson Suspension	14QK413M6		...	...		**83111**	...
		14QK413M7		...	...		**83111**	...
		14QK-413M6		...	...		**83111**	...
		14QK-413M7		...	...		**83111**	...
		57241-006		...	...		**83111**	...
		57241-006L		...	...		**83111**	...
		25622221		...	...		**83111**	...
		25625223		...	...		**83111**	...
		57241006		...	...		**83111**	...
		57241006L		...	...		**83111**	...
89-05	CH600 Models with HAS400 MACK Air Suspension	14QK410M		...	...	○|○	**83125**	...
		14QK-410M		...	...	○|○	**83125**	...
		47902-25		...	...	○|○	**83125**	...
		4790225		...	...	○|○	**83125**	...
		25625234		...	...	○|○	**83125**	...
89-05	CH600 Models with Hendrickson AL-405 Rear Suspension	14QK413M7		...	...		**83111**	...
		14QK-413M7		...	...		**83111**	...
		57241-006		...	...		**83111**	...
		57241-006L		...	...		**83111**	...
		25625223		...	...		**83111**	...
		57241006		...	...		**83111**	...

MACK (CONT'D)

CH (cont'd)

Year Ano Année	Model Modelo Modle	OEM #		Front			Rear	
				Fleetline	GasSLX		Fleetline	GasSLX
89-05	CH600 Models with Hendrickson AL-405 Rear Suspension	57241006L		...	...		83111	...
89-05	CH600 Models with Hendrickson HAS-40LH Air Suspension (O.E. Number 57241-4)	14QK413M4		...	...		83110	...
		14QK-413M4		...	...		83110	...
		57241-4		...	...		83110	...
		572414		...	...		83110	...
89-05	CH600 Models with Hendrickson HN-2 Series Suspension	14QK415M		...	...		83112	...
		14QK415M7		...	...		83112	...
		14QK-415M		...	...		83112	...
		14QK-415M7		...	...		83112	...
		60680-003		...	...		83112	...
		60680-003L		...	...		83112	...
		25624241		...	...		83112	...
		60680003		...	...		83112	...
		60680003L		...	...		83112	...
89-05	CH600 Models with Hendrickson Rear Air Suspension	14QK393AM		...	...	o|o	83123	89405
		14QK-393AM		...	...	o|o	83123	89405
		47902-9		...	...	o|o	83123	89405
		479029		...	...	o|o	83123	89405
89-05	CH600 Models with Neway AD Air Suspension Shock w/ extended length of 21.70"	14QK414M		...	...	o|o	85906	89407
		14QK-414M		...	...	o|o	85906	89407
		90045099		...	...	o|o	85906	89407
89-05	CH600 Models with Neway AD Air Suspension Shock w/ extended length of 24.30"	14QK414M2		...	...	o|o	85909	...
		14QK-414M2		...	...	o|o	85909	...
		25624351		...	...	o|o	85909	...
89-05	CH600 Models with ST34 Suspension	14QK2133M	o|o	85001	89410		...	...
		14QK-2133M	o|o	85001	89410		...	...
		25622466	o|o	85001	89410		...	...
89-05	CH Models with Hendrickson HA Series Air Suspension	14QK410M2		...	...	o|o	83137	...
		14QK410M3		...	...	o|o	83125	...
		14QK-410M2		...	...	o|o	83137	...
		14QK-410M3		...	...	o|o	83125	...
		25625254		...	...	o|o	83125	...
89-05	Models with O.E.M. Number	14QK411	o|o	83007				
		14QK411AM	o|o	83007				
		14QK411M	o|o	83007				
		14QK421M	o|o	85014	...		...	...
		14QK2113P6		...	...	o|o	85007	...
		14QK-411	o|o	83007				
		14QK-411AM	o|o	83007				
		14QK-411M	o|o	83007				
		14QK-421M	o|o	85014	...		...	...
		14QK-2113P6		...	...	o|o	85007	...
		25631922	o|o	83007				
		471700000426	o|o	85014	...		...	...
89-05	Models with Sleeper Cab	14QK391AM	–|–	83041				
		14QK391AM2	–|–	83041				
		14QK-391AM	–|–	83041				
		14QK-391AM2	–|–	83041				

CHN

04-07	CHN-613 Models w/ MACK Air Suspension	14QK3101M		...	...	o|o	85066	89448

Year Ano Année	Model Modelo Modle	OEM #		Front			Rear	
				Fleetline	GasSLX		Fleetline	GasSLX
MACK (CONT'D)								
CHN (cont'd)								
04-07	CHN-613 Models w/ MACK Air Suspension	14QK-3101M		...	...	○|○	85066	89448
		471700000431		...	...	○|○	85066	89448
		SDA471700000431		...	...	○|○	85066	89448
04-07	CHN-613 Models with 12,000 lb Front Axle	14QK3107M	○|○	85061	89450		...	...
		14QK-3107M	○|○	85061	89450		...	...
		20973993	○|○	85061	89450		...	...
04-07	CHN-613 Models with 14,600 lb Front Axle	14QK434M	○|○	85014	...		...	...
		14QK-434M	○|○	85014	...		...	...
		20998401	○|○	85014	...		...	...
04-07	CHN-613 Models with Camelback Rear Suspension (SS34 & 38)	25625091		...	...	○|○	83215	...
05-07	CHN-613 Models with O.E.M. Number	14QK3103M		83050				
		14QK-3103M		83050				
		20874147		83050				
CHU								
08-19	CHU-613 Models with 12,000 lb or 14,600 lb Front Axle	14QK434M	○|○	85014	...		...	...
		14QK-434M	○|○	85014	...		...	...
		20625775	○|○	85014	...		...	...
		20998401	○|○	85014	...		...	...
		471700002861	○|○	85014	...		...	...
		SDA471700002861	○|○	85014	...		...	...
08-19	CHU-613 Models with Camelback Rear Suspension (SS34 & 38)	14QK2107P2		...	...	○|○	83215	...
		14QK-2107P2		...	...	○|○	83215	...
		25625091		...	...	○|○	83215	...
08-19	CHU-613 Models with Hendrickson 38,000 lb Rear Air Suspension	14QK424M		...	...	○|○	83147	...
		14QK-424M		...	...	○|○	83147	...
		60670-006		...	...	○|○	83147	...
		60670-006L		...	...	○|○	83147	...
		20570098		...	...	○|○	83147	...
		60670006		...	...	○|○	83147	...
		60670006L		...	...	○|○	83147	...
08-19	CHU-613 Models with Hendrickson HAS 400 or 460 Series Rear Suspension	60675-001		...	...	○|○	85978	...
		60675-001L		...	...	○|○	85978	...
		8083872		...	...	○|○	85978	...
		60675001		...	...	○|○	85978	...
		60675001L		...	...	○|○	85978	...
08-19	CHU-613 Models with O.E.M. Number	14QK303M		83050				
		14QK3103M		83050				
		14QK-303M		83050				
		14QK-3103M		83050				
		20874147		83050				
08-19	Models with Sleeper Cabs with O.E.M. Number	14QK399M		83045				
		14QK399M2		83045				
		14QK399M3		83045				
		14QK-399M		83045				
		14QK-399M2		83045				
		14QK-399M3		83045				
		25625635		83045				
		25625636		83045				
		25625637		83045				
11-19	CHU-613 Models with 40,000 lb Rear Air Suspensions	22202560		...	...	○|○	85088	...
		471700009647		...	...	○|○	85088	...
12-19	Models with O.E.M. Number	22662254	○|○	83901				
		22662259	○|○	83901				

Year Ano Année	Model Modelo Modle	OEM #		Front			Rear	
				Fleetline	GasSLX		Fleetline	GasSLX

MACK (CONT'D)

CHU (cont'd)

14-19	Day Cab Models with O.E.M. Number	21345869	O|O	83066				
		21490486	O|O	83066				
		23145372	O|O	83066				

CL

91-07	CL600, CL700 Models with ALV Hendrickson Suspension	14QK413M6		...	...		83111	...
		14QK413M7		...	...		83111	...
		14QK-413M6		...	...		83111	...
		14QK-413M7		...	...		83111	...
		57241-006		...	...		83111	...
		57241-006L		...	...		83111	...
		25622221		...	...		83111	...
		25625223		...	...		83111	...
		57241006		...	...		83111	...
		57241006L		...	...		83111	...
91-07	CL600, CL700 Models with HAS400 MACK Air Suspension	14QK410M		...	...	O|O	83125	...
		14QK-410M		...	...	O|O	83125	...
		47902-25		...	...	O|O	83125	...
		4790225		...	...	O|O	83125	...
		25625234		...	...	O|O	83125	...
91-07	CL600, CL700 Models with Hendrickson HA Series Air Suspension	14QK410M2		...	...	O|O	83137	...
		14QK410M3		...	...	O|O	83125	...
		14QK-410M2		...	...	O|O	83137	...
		14QK-410M3		...	...	O|O	83125	...
		25625254		...	...	O|O	83125	...
91-07	CL600, CL700 Models with Hendrickson HN-2 Series Suspension	14QK415M		...	...		83112	...
		14QK415M7		...	...		83112	...
		14QK-415M		...	...		83112	...
		14QK-415M7		...	...		83112	...
		60680-003		...	...		83112	...
		60680-003L		...	...		83112	...
		25624241		...	...		83112	...
		60680003		...	...		83112	...
		60680003L		...	...		83112	...
91-07	CL600, CL700 Models with Hendrickson Rear Air Suspension	14QK393AM		...	...	O|O	83123	89405
		14QK-393AM		...	...	O|O	83123	89405
		47902-9		...	...	O|O	83123	89405
		479029		...	...	O|O	83123	89405
91-07	CL600, CL700 Models with Multileaf Spring Suspension	14QK392BM2	O|O	85321	...		...	...
		14QK-392BM2	O|O	85321	...		...	...
		25624862	O|O	85321	...		...	...
91-07	CL600, CL700 Models with Neway AD Air Suspension Shock w/ extended length of 21.70"	14QK414M		...	...	O|O	85906	89407
		14QK-414M		...	...	O|O	85906	89407
		90045099		...	...	O|O	85906	89407
91-07	CL600, CL700 Models with Neway AD Air Suspension Shock w/ extended length of 24.30"	14QK414M2		...	...	O|O	85909	...
		14QK-414M2		...	...	O|O	85909	...
		25624351		...	...	O|O	85909	...
91-07	CL600, CL700 Models with ST34 Suspension	14QK2113	O|O	85001	89410		...	...
		14QK2133M	O|O	85001	89410		...	...
		14QK-2113	O|O	85001	89410		...	...
		14QK-2133M	O|O	85001	89410		...	...
		25621955	O|O	85001	89410		...	...
		25622466	O|O	85001	89410		...	...

Year Ano Année	Model Modelo Modle	OEM #		Front			Rear	
				Fleetline	GasSLX		Fleetline	GasSLX
MACK (CONT'D)								
CL (cont'd)								
91-07	CL600, CL700 Models with ST34 Suspension	25632145	O|O	**85001**	**89410**		...	...
91-07	CL600, CL700 Models with Steering Axle & Taperleaf Spring	14QK392AM	O|O	**85005**	**89430**		...	...
		14QK392AM2	O|O	**85005**	**89430**		...	...
		14QK392AM3	O|O	**85005**	**89430**		...	...
		14QK392BM	O|O	**85005**	**89430**		...	...
		14QK-392AM	O|O	**85005**	**89430**		...	...
		14QK-392AM2	O|O	**85005**	**89430**		...	...
		14QK-392AM3	O|O	**85005**	**89430**		...	...
		14QK-392BM	O|O	**85005**	**89430**		...	...
		25625743	O|O	**85005**	**89430**		...	...
91-07	Models with O.E.M number	14QK391AM	–|–	**83041**				
		14QK391AM2	–|–	**83041**				
		14QK-391AM	–|–	**83041**				
		14QK-391AM2	–|–	**83041**				
CT								
05-07	Models with 20,000 lb Front Axles	14QK427M		**85080**	...		...	...
		14QK3108M		**85080**	...		...	...
		14QK-427M		**85080**	...		...	...
		14QK-3108M		**85080**	...		...	...
		20863239		**85080**	...		...	...
		25626048		**85080**	...		...	...
		471700000445		**85080**	...		...	...
05-07	Models with O.E.M. Number	14QK3103M		**83050**				
		14QK3116M	O|O	**83101**	...		...	...
		14QK-3103M		**83050**				
		14QK-3116M	O|O	**83101**	...		...	...
		20874147		**83050**				
CV								
01-08	Models with O.E.M number	14QK391BM	–|–	**83041**				
		14QK-391BM	–|–	**83041**				
02-08	CV-713 Models with 18,000 lb Front Axles	14QK366	O|O	**85036**	**89405**		...	...
		14QK-366	O|O	**85036**	**89405**		...	...
		25625151	O|O	**85036**	**89405**		...	...
02-08	CV-713 Models with Hendrickson HN-2 Models Suspension	14QK415M		...	...		**83112**	...
		14QK415M7		...	...		**83112**	...
		14QK-415M		...	...		**83112**	...
		14QK-415M7		...	...		**83112**	...
		60680-003		...	...		**83112**	...
		60680-003L		...	...		**83112**	...
		25624241		...	...		**83112**	...
		60680003		...	...		**83112**	...
		60680003L		...	...		**83112**	...
02-08	Models with Hendrickson HMX 400/460 Haulmax with 16.5" Saddle	60680-004		...	...		**83143**	...
		60680-004L		...	...		**83143**	...
		60680004		...	...		**83143**	...
		60680004L		...	...		**83143**	...
		H60680004		...	...		**83143**	...
02-08	Models with Hendrickson HMX 400/460 Haulmax with 17.5" & 18.5" Saddle	14QK5142		...	...		**83142**	...
		14QK-5142		...	...		**83142**	...
		60680-005		...	...		**83142**	...
		60680-005L		...	...		**83142**	...
		25626196		...	...		**83142**	...

APPLICATION GUIDE - TRUCKS, TRAILERS AND BUSES

Year Ano Année	Model Modelo Modle	OEM #		Front			Rear	
				Fleetline	GasSLX		Fleetline	GasSLX
MACK (CONT'D)								
CV (cont'd)								
02-08	Models with Hendrickson HMX 400/460 Haulmax with 17.5" & 18.5" Saddle	60680005		...	...		83142	...
		60680005L		...	...		83142	...
		H60680005		...	...		83142	...
CX								
00-05	Models with Sleeper Cabs with O.E.M. Number	14QK399M		83045				
		14QK399M2		83045				
		14QK399M3		83045				
		14QK-399M		83045				
		14QK-399M2		83045				
		14QK-399M3		83045				
		25625635		83045				
		25625636		83045				
		25625637		83045				
98-05	CH Models with Hendrickson HA Series Air Suspension	14QK410M2		...	...	o|o	83137	...
		14QK-410M2		...	...	o|o	83137	...
98-05	CX Vision Models w/ Hendrickson Air Suspension	14QK431M		...	...	o|o	85061	89450
		14QK-431M		...	...	o|o	85061	89450
98-05	CX Vision Models w/ Parabolic Spring	14QK431M		...	...	o|o	85061	89450
		14QK-431M		...	...	o|o	85061	89450
98-05	CX Vison Models w/ MACK Air Suspension	14QK3101M		...	...	o|o	85066	89448
		14QK-3101M		...	...	o|o	85066	89448
		471700000431		...	...	o|o	85066	89448
		SDA471700000431		...	...	o|o	85066	89448
98-05	Models with 12000 lb Taperleaf Front Suspension	14QK392AM	o|o	85005	89430		...	...
		14QK392AM3	o|o	85005	89430		...	...
		14QK392BM	o|o	85005	89430		...	...
		14QK392BM3	o|o	85005	89430		...	...
		14QK396	o|o	85005	89430		...	...
		14QK396M	o|o	85005	89430		...	...
		14QK-392AM	o|o	85005	89430		...	...
		14QK-392AM3	o|o	85005	89430		...	...
		14QK-392BM	o|o	85005	89430		...	...
		14QK-392BM3	o|o	85005	89430		...	...
		14QK-396	o|o	85005	89430		...	...
		14QK-396M	o|o	85005	89430		...	...
		25625743	o|o	85005	89430		...	...
98-05	Models with ALV Hendrickson Suspension	14QK413M6		...	...		83111	...
		14QK-413M6		...	...		83111	...
		57241-006		...	...		83111	...
		57241-006L		...	...		83111	...
		25622221		...	...		83111	...
		25625223		...	...		83111	...
		57241006		...	...		83111	...
		57241006L		...	...		83111	...
98-05	Models with HAS400 MACK Air Suspension	14QK410M		...	...	o|o	83125	...
		14QK-410M		...	...	o|o	83125	...
		47902-25		...	...	o|o	83125	...
		4790225		...	...	o|o	83125	...
		25625234		...	...	o|o	83125	...
98-05	Models with Hendrickson HAS-40LH Air Suspension (O.E. Number 57241-4)	14QK413M4		...	...		83110	...
		14QK-413M4		...	...		83110	...
		57241-4		...	...		83110	...
		572414		...	...		83110	...

Year Ano Année	Model Modelo Modle	OEM #		Front			Rear	
				Fleetline	GasSLX		Fleetline	GasSLX
MACK (CONT'D)								
CX (cont'd)								
98-05	Models with Hendrickson HA Series Air Suspension	14QK410M3		...	...	○|○	83125	...
		14QK-410M3		...	...	○|○	83125	...
		25625254		...	...	○|○	83125	...
98-05	Models with Hendrickson HN-2 Series Suspension	14QK415M		...	...		83112	...
		14QK415M7		...	...		83112	...
		14QK-415M		...	...		83112	...
		14QK-415M7		...	...		83112	...
		60680-003		...	...		83112	...
		60680-003L		...	...		83112	...
		25624241		...	...		83112	...
		60680003		...	...		83112	...
		60680003L		...	...		83112	...
98-05	Models with MAC AL405 Suspension	14QK413M7		...	...		83111	...
		14QK-413M7		...	...		83111	...
		57241-006		...	...		83111	...
		57241-006L		...	...		83111	...
		25625223		...	...		83111	...
		57241006		...	...		83111	...
		57241006L		...	...		83111	...
98-05	Models with Neway AD Air Suspension Shock w/ extended length of 21.70"	14QK414M		...	...	○|○	85906	89407
		14QK-414M		...	...	○|○	85906	89407
		90045099		...	...	○|○	85906	89407
98-05	Models with Neway AD Air Suspension Shock w/ extended length of 24.30"	14QK414M2		...	...	○|○	85909	...
		14QK-414M2		...	...	○|○	85909	...
		25624351		...	...	○|○	85909	...
98-05	Models with O.E.M. Number	20513881	○|○	85061	89450		...	...
		141700000373	○|○	85061	89450		...	...
CXN								
05-07	CXN-613 Models w/ MACK Air Suspension	14QK3101M		...	...	○|○	85066	89448
		14QK-3101M		...	...	○|○	85066	89448
		SDA471700000431		...	...	○|○	85066	89448
04-08	CXN-613 Models with Hendrickson AirTek Front Air Suspension	14QK322M	○|○	85933	89454		...	...
		14QK422M	○|○	85933	89454		...	...
		14QK-322M	○|○	85933	89454		...	...
		14QK-422M	○|○	85933	89454		...	...
		64838-002	○|○	85933	89454		...	...
		20485633	○|○	85933	89454		...	...
		64838002	○|○	85933	89454		...	...
04-08	Models with O.E.M. Number	14QK421M	○|○	85014	...		...	...
		14QK-421M	○|○	85014	...		...	...
		471700000426	○|○	85014	...		...	...
04-08	Models with Sleeper Cabs with O.E.M. Number	14QK399M		83045				
		14QK399M2		83045				
		14QK399M3		83045				
		14QK-399M		83045				
		14QK-399M2		83045				
		14QK-399M3		83045				
		25625635		83045				
		25625636		83045				
		25625637		83045				
05-08	CXN-613 Models with 12,000 lb Front Axles	14QK3114M	○|○	85061	89450		...	...
		14QK-3114M	○|○	85061	89450		...	...
		20973993	○|○	85061	89450		...	...

Year Ano Année	Model Modelo Modle	OEM #		Front			Rear	
				Fleetline	GasSLX		Fleetline	GasSLX

MACK (CONT'D)

CXN (cont'd)

05-08	CXN-613 Models with 12,000 lb Front Axles	SDA141700000380	O|O	85061	89450		...	...
05-08	CXN-613 Models with Hendrickson 38,000 lb Rear Air Suspension	14QK424M		...	...	O|O	83147	...
		14QK-424M		...	...	O|O	83147	...
		60670-006		...	...	O|O	83147	...
		60670-006L		...	...	O|O	83147	...
		20570098		...	...	O|O	83147	...
		60670006		...	...	O|O	83147	...
		60670006L		...	...	O|O	83147	...
05-08	CXN-613 Models with O.E.M. Number	14QK3103M		83050				
		14QK-3103M		83050				
		20874147		83050				
2008	CXN-613 Models with 40,000 lb Rear Air Suspensions	14QK2136M		...	...	O|O	85061	89450
		14QK-2136M		...	...	O|O	85061	89450
		20897198		...	...	O|O	85061	89450

CXP

06-07	CXP-613 Day Cab Models	14QK3103M		83050				
		14QK-3103M		83050				
		20874147		83050				
06-07	CXP-613 Models with 12,000 lb Front Axles	14QK3114M	O|O	85061	89450		...	...
		14QK-3114M	O|O	85061	89450		...	...
		20973993	O|O	85061	89450		...	...
		SDA141700000380	O|O	85061	89450		...	...
06-07	CXP-613 Models with 40,000 lb Rear Air Suspensions	14QK2136M		...	...	O|O	85061	89450
		14QK-2136M		...	...	O|O	85061	89450
		20897198		...	...	O|O	85061	89450
		471700002626		...	...	O|O	85061	89450
06-07	Models with Sleeper Cabs with O.E.M. Number	14QK399M		83045				
		14QK399M2		83045				
		14QK399M3		83045				
		14QK-399M		83045				
		14QK-399M2		83045				
		14QK-399M3		83045				
		25625635		83045				
		25625636		83045				
		25625637		83045				

CXU

08-10	CXU613 Models with 12,000 lb Front Axles	14QK3114M	O|O	85061	89450		...	...
		14QK-3114M	O|O	85061	89450		...	...
		20973993	O|O	85061	89450		...	...
		141700000380	O|O	85061	89450		...	...
		SDA141700000380	O|O	85061	89450		...	...
08-10	CXU613 Models with 40,000 lb Rear Air Suspensions	14QK2136M		...	...	O|O	85061	89450
		14QK-2136M		...	...	O|O	85061	89450
		20897198		...	...	O|O	85061	89450
		471700002626		...	...	O|O	85061	89450
08-11	Models with O.E.M. Number	14QK303M		83050				
		14QK3103M		83050				
		14QK-303M		83050				
		14QK-3103M		83050				
		20874147		83050				
11-18	CXU613 Models with 12,000 - 14,600 lb Front Axles	21436096	O|O	85098	89502		...	...
		141700005839	O|O	85098	89502		...	...

APPLICATION GUIDE - TRUCKS, TRAILERS AND BUSES

Year Ano Année	Model Modelo Modle	OEM #		Front			Rear	
				Fleetline	GasSLX		Fleetline	GasSLX
MACK (CONT'D)								
CXU (cont'd)								
08-19	Day Cab Models with O.E.M. Number	21345869	○|○	**83066**				
		21490486	○|○	**83066**				
08-19	Models with Sleeper Cabs with O.E.M. Number	14QK399M		**83045**				
		14QK399M2		**83045**				
		14QK399M3		**83045**				
		14QK-399M		**83045**				
		14QK-399M2		**83045**				
		14QK-399M3		**83045**				
		25625635		**83045**				
		25625636		**83045**				
		25625637		**83045**				
11-19	CXU613 Models with 40,000 lb Rear Air Suspensions	21462382		**...**	**...**	○|○	**85088**	**...**
		21462384		**...**	**...**	○|○	**85088**	**...**
		22202559		**...**	**...**	○|○	**85088**	**...**
		22202560		**...**	**...**	○|○	**85088**	**...**
		471700006039		**...**	**...**	○|○	**85088**	**...**
		471700009646		**...**	**...**	○|○	**85088**	**...**
		471700009647		**...**	**...**	○|○	**85088**	**...**
12-19	Models with O.E.M. Number	22662254	○|○	**83901**				
		22662259	○|○	**83901**				
DM								
81-03	DM Models	.....	○|○	**83209**	**89414**		**...**	**...**
		.....		**...**	**...**	○|○	**83215**	**...**
81-03	Models with O.E.M. Number	14QK2100P8	○|○	**83242**	**...**		**...**	**...**
		14QK-2100P8	○|○	**83242**	**...**		**...**	**...**
		25622345	○|○	**83242**	**...**		**...**	**...**
GRANITE								
15-17	Models with 12,000 lb or 14,600 lb Front Axle	14QK434M	○|○	**85014**	**...**		**...**	**...**
		14QK-434M	○|○	**85014**	**...**		**...**	**...**
		20998401	○|○	**85014**	**...**		**...**	**...**
15-19	GU713 and GU813 Models with O.E.M. Number	14QK432M		**83050**				
		14QK-432M		**83050**				
		20873442		**83050**				
		21345869	○|○	**83066**				
		21490486	○|○	**83066**				
15-19	GU713 or GU813 Models with Hendrickson 38,000 lb Rear Air Suspension	14QK424M		**...**	**...**	○|○	**83147**	**...**
		14QK-424M		**...**	**...**	○|○	**83147**	**...**
		60670-006		**...**	**...**	○|○	**83147**	**...**
		60670-006L		**...**	**...**	○|○	**83147**	**...**
		20570098		**...**	**...**	○|○	**83147**	**...**
		60670006		**...**	**...**	○|○	**83147**	**...**
		60670006L		**...**	**...**	○|○	**83147**	**...**
15-19	Models with O.E.M. Number	22662254	○|○	**83901**				
		22662259	○|○	**83901**				
15-20	Models with Hendrickson HAS Series Rear Suspension	60675-13		**...**	**...**	○|○	**85036**	**89405**
		6067513		**...**	**...**	○|○	**85036**	**89405**
		22314111		**...**	**...**	○|○	**85036**	**89405**
18-20	Granite 64BR & 64FR Models with Hendrickson HN - 462	25625241		**...**	**...**		**83112**	**...**
		60680-003		**...**	**...**		**83112**	**...**
		60680-003L		**...**	**...**		**83112**	**...**
		60680003		**...**	**...**		**83112**	**...**
		60680003L		**...**	**...**		**83112**	**...**

APPLICATION GUIDE - TRUCKS, TRAILERS AND BUSES

Year Ano Année	Model Modelo Modle	OEM #		Front			Rear	
				Fleetline	GasSLX		Fleetline	GasSLX
MACK (CONT'D)								
GRANITE (cont'd)								
15-22	Models with Hendrickson HAS 400 or 460 Series Rear Suspension	60675-001		...	...	O|O	**85978**	...
		60675-001L		...	...	O|O	**85978**	...
		8083872		...	...	O|O	**85978**	...
		60675001		...	...	O|O	**85978**	...
		60675001L		...	...	O|O	**85978**	...
15-23	Models with 14,600 lb to 18,000 lb Multi-Leaf Front Springs	14QK3116M	O|O	**83101**	...		...	...
		14QK-3116M	O|O	**83101**	...		...	...
		21010744	O|O	**83101**	...		...	...
15-23	Models with Hendrickson HMX 400/460 Haulmax with 16.5" Saddle	60680-004		...	...		**83143**	...
		60680-004L		...	...		**83143**	...
		60680004		...	...		**83143**	...
		60680004L		...	...		**83143**	...
		H60680004		...	...		**83143**	...
15-23	Models with Hendrickson HMX 400/460 Haulmax with 17.5" & 18.5" Saddle	14QK5142		...	...		**83142**	...
		14QK-5142		...	...		**83142**	...
		60680-005		...	...		**83142**	...
		60680-005L		...	...		**83142**	...
		25626196		...	...		**83142**	...
		60680005		...	...		**83142**	...
		60680005L		...	...		**83142**	...
		H60680005		...	...		**83142**	...
18-23	Granite 64BR & 64FR Models with 20,000 lb Front Axle	21010744	O|O	**83101**	...		...	...
18-23	Granite 64BR & 64FR Models with 46,000 lb Mack Mride Rear Suspension	21979343		...	...		**85065**	...
		471700008934		...	...		**85065**	...
21-23	Models with O.E.M. Number	22662254	O|O	**83901**				
		22662259	O|O	**83901**				
GU4								
12-19	GU432 Models with 12,000 lb or 14,600 lb Front Axle	14QK434M	O|O	**85014**	...		...	...
		14QK-434M	O|O	**85014**	...		...	...
		20998401	O|O	**85014**	...		...	...
12-19	GU432 Models with 14,600 lb to 18,000 lb Multi-Leaf Front Springs	21010744	O|O	**83101**	...		...	...
12-19	GU432 Models with Hendrickson HAS 400 or 460 Series Rear Suspension	60675-001		...	...	O|O	**85978**	...
		60675-001L		...	...	O|O	**85978**	...
		8083872		...	...	O|O	**85978**	...
		60675001		...	...	O|O	**85978**	...
		60675001L		...	...	O|O	**85978**	...
12-19	GU432 Models with O.E.M. Number	22662254	O|O	**83901**				
		22662259	O|O	**83901**				
GU5								
12-18	GU532 Models with 14,600 lb to 18,000 lb Multi-Leaf Front Springs	21010744	O|O	**83101**	...		...	...
12-18	GU533 Models with 12,000 lb or 14,600 lb Front Axle	14QK434M	O|O	**85014**	...		...	...
		14QK-434M	O|O	**85014**	...		...	...
		20998401	O|O	**85014**	...		...	...
12-18	GU533 Models with Hendrickson HAS 400 or 460 Series Rear Suspension	60675-001		...	...	O|O	**85978**	...
		60675-001L		...	...	O|O	**85978**	...
		8083872		...	...	O|O	**85978**	...
		60675001		...	...	O|O	**85978**	...
		60675001L		...	...	O|O	**85978**	...
12-18	GU533 Models with O.E.M. Number	22662254	O|O	**83901**				
		22662259	O|O	**83901**				
GU7								
08-10	GU-713 Models with 20,000 lb Front Axles	14QK427M		**85080**	...		...	...

MACK (CONT'D)

GU7 (cont'd)

Year Ano Année	Model Modelo Modle	OEM #		Front			Rear	
				Fleetline	GasSLX		Fleetline	GasSLX
08-10	GU-713 Models with 20,000 lb Front Axles	14QK3108M		85080	...		...	...
		14QK-427M		85080	...		...	...
		14QK-3108M		85080	...		...	...
		20863239		85080	...		...	...
		25626048		85080	...		...	...
		471700000445		85080	...		...	...
08-19	GU713 Models with 14,600 lb to 18,000 lb Multi-Leaf Front Springs	14QK3116M	○|○	83101	...		...	...
		14QK-3116M	○|○	83101	...		...	...
		21010744	○|○	83101	...		...	...
08-19	GU713 Models with Hendrickson 38,000 lb Rear Air Suspension	14QK424M		...	...	○|○	83147	...
		14QK-424M		...	...	○|○	83147	...
		60670-006		...	...	○|○	83147	...
		60670-006L		...	...	○|○	83147	...
		20570098		...	...	○|○	83147	...
		60670006		...	...	○|○	83147	...
		60670006L		...	...	○|○	83147	...
08-19	GU713 Models with Hendrickson HAS 400 or 460 Series Rear Suspension	60675-001		...	...	○|○	85978	...
		60675-001L		...	...	○|○	85978	...
		8083872		...	...	○|○	85978	...
		60675001		...	...	○|○	85978	...
		60675001L		...	...	○|○	85978	...
08-19	GU713 Models with Hendrickson HAS Series Rear Suspension	60675-13		...	...	○|○	85036	89405
		6067513		...	...	○|○	85036	89405
		22314111		...	...	○|○	85036	89405
08-19	GU713 Models with O.E.M. Number	14QK432M		83050				
		14QK-432M		83050				
		20873442		83050				
		22662254	○|○	83901				
		22662259	○|○	83901				
09-19	GU713 Models with O.E.M. Number	21345869	○|○	83066				
		21490486	○|○	83066				

GU8

08-10	GU-813 Models with 20,000 lb Front Axles	14QK427M		85080	...		...	...
		14QK3108M		85080	...		...	...
		14QK-427M		85080	...		...	...
		14QK-3108M		85080	...		...	...
		20863239		85080	...		...	...
		25626048		85080	...		...	...
		471700000445		85080	...		...	...
08-19	GU813 Models with 14,600 lb to 18,000 lb Multi-Leaf Front Springs	14QK3116M	○|○	83101	...		...	...
		14QK-3116M	○|○	83101	...		...	...
		21010744	○|○	83101	...		...	...
08-19	GU813 Models with Hendrickson 38,000 lb Rear Air Suspension	14QK424M		...	...	○|○	83147	...
		14QK-424M		...	...	○|○	83147	...
		60670-006		...	...	○|○	83147	...
		60670-006L		...	...	○|○	83147	...
		20570098		...	...	○|○	83147	...
		60670006		...	...	○|○	83147	...
		60670006L		...	...	○|○	83147	...
08-19	GU813 Models with Hendrickson HAS 400 or 460 Series Rear Suspension	60675-001		...	...	○|○	85978	...
		60675-001L		...	...	○|○	85978	...
		8083872		...	...	○|○	85978	...
		60675001		...	...	○|○	85978	...

APPLICATION GUIDE - TRUCKS, TRAILERS AND BUSES

Year Ano Année	Model Modelo Modle	OEM #		Front			Rear	
				Fleetline	GasSLX		Fleetline	GasSLX

MACK (CONT'D)

GU8 (cont'd)

08-19	GU813 Models with Hendrickson HAS 400 or 460 Series Rear Suspension	60675001L		...	...	○|○	85978	...
08-19	GU813 Models with Hendrickson HAS Series Rear Suspension	60675-13		...	...	○|○	85036	89405
		6067513		...	...	○|○	85036	89405
		22314111		...	...	○|○	85036	89405
08-19	GU813 Models with O.E.M. Number	14QK432M		83050				
		14QK-432M		83050				
		20873442		83050				
		22662254	○|○	83901				
		22662259	○|○	83901				
09-19	GU813 Models with O.E.M. Number	21345869	○|○	83066				
		21490486	○|○	83066				

LE

01-06	LE 613 Models with O.E.M Number	14QK366P4	○|○	83209	89414		...	...
		14QK-366P4	○|○	83209	89414		...	...
		25625187	○|○	83209	89414		...	...
01-07	Models with Hendrickson HMX 400/460 Haulmax with 16.5" Saddle	60680-004		...	...		83143	...
		60680-004L		...	...		83143	...
		60680004		...	...		83143	...
		60680004L		...	...		83143	...
01-07	Models with Hendrickson HMX 400/460 Haulmax with 17.5" & 18.5" Saddle	14QK5142		...	...		83142	...
		14QK-5142		...	...		83142	...
		60680-005		...	...		83142	...
		60680-005L		...	...		83142	...
		25626196		...	...		83142	...
		60680005		...	...		83142	...
		60680005L		...	...		83142	...
		H60680005		...	...		83142	...
2010	LE & LEU 613 Models with Ridewell RD-202S HD Tandem Drive Truck Suspension	1252607B000		...	...	○|○	85702	...
2010	LEU 613 Models with 20,000 lb Front Axle	21002497	○|○	85972	...		...	...
2010	Models with Hendrickson HMX 400/460 Haulmax with 16.5" Saddle	60680-004		...	...		83143	...
		60680-004L		...	...		83143	...
		60680004		...	...		83143	...
		60680004L		...	...		83143	...
2010	Models with Hendrickson HMX 400/460 Haulmax with 17.5" & 18.5" Saddle	14QK5142		...	...		83142	...
		14QK-5142		...	...		83142	...
		60680-005		...	...		83142	...
		60680-005L		...	...		83142	...
		25626196		...	...		83142	...
		60680005		...	...		83142	...
		60680005L		...	...		83142	...
		H60680005		...	...		83142	...

LEU

08-15	Models with Hendrickson HMX 400/460 Haulmax with 16.5" Saddle	60680-004		...	...		83143	...
		60680-004L		...	...		83143	...
		60680004		...	...		83143	...
		60680004L		...	...		83143	...
08-16	Models with Hendrickson HMX 400/460 Haulmax with 17.5" & 18.5" Saddle	14QK5142		...	...		83142	...
		14QK-5142		...	...		83142	...
		60680-005		...	...		83142	...
		60680-005L		...	...		83142	...
		25626196		...	...		83142	...

APPLICATION GUIDE - TRUCKS, TRAILERS AND BUSES

Year Ano Année	Model Modelo Modle	OEM #		Front			Rear	
				Fleetline	GasSLX		Fleetline	GasSLX
MACK (CONT'D)								
LEU (cont'd)								
08-16	Models with Hendrickson HMX 400/460 Haulmax with 17.5" & 18.5" Saddle	60680005		...	...		83142	...
		60680005L		...	...		83142	...
		H60680005		...	...		83142	...
10-16	LE & LEU 613 Models with Ridewell RD-202S HD Tandem Drive Truck Suspension	1252607B000		...	...	○|○	85702	...
10-16	LEU 613 Models with 20,000 lb Front Axle	21002497	○|○	85972	...		...	...
2009	LEU 613 Models with 18,000 lb Front Axle	14QK372M2	○|○	83209	89414		...	...
		14QK-372M2	○|○	83209	89414		...	...
		25632561	○|○	83209	89414		...	...
LR								
19-23	LR64R Models with 20,000 lb Front Axle	21002497	○|○	85972	...		...	...
MD6								
21-22	Models with 10,000 lb Taperleaf Springs	78530771	○|○	83127	...		...	...
		471700015341	○|○	83127	...		...	...
21-22	Models with O.E.M. Number	23145372	○|○	83066				
		23159760		...	...	○|○	85188	...
MD7								
21-23	Models with 12,000 lb Taperleaf Springs	78530771	○|○	83127	...		...	...
		471700015341	○|○	83127	...		...	...
21-23	Models with O.E.M. Number	23145372	○|○	83066				
		23159760		...	...	○|○	85188	...
MH								
83-94	MH Models - 4" Wide Springs	14QK373	○|○	83215	...		...	...
		14QK378M	○|○	83215	...		...	...
		14QK-373	○|○	83215	...		...	...
		14QK-378M	○|○	83215	...		...	...
		25623321	○|○	83215	...		...	...
83-94	MH Models with Camelback Rear Suspension (SS34 & 38)	14QK2107P1		...	...	○|○	83215	...
		14QK2107P2		...	...	○|○	83215	...
		14QK-2107P1		...	...	○|○	83215	...
		14QK-2107P2		...	...	○|○	83215	...
		25625091		...	...	○|○	83215	...
83-94	MH Models with Neway ARD-234 Air Suspension	14QK375M		...	...	○|○	83123	89405
		14QK-375M		...	...	○|○	83123	89405
83-94	MH Models with O.E.M. Number	14QK377M	○|○	83215	...		...	...
		14QK392AM	○|○	85005	89430		...	...
		14QK2113P5	○|○	85001	89410		...	...
		14QK2133M	○|○	85001	89410		...	...
		14QK2133M2	○|○	85001	89410		...	...
		14QK-377M	○|○	83215	...		...	...
		14QK-392AM	○|○	85005	89430		...	...
		14QK-2113P5	○|○	85001	89410		...	...
		14QK-2133M	○|○	85001	89410		...	...
		14QK-2133M2	○|○	85001	89410		...	...
		25622466	○|○	85001	89410		...	...
83-94	MH Models with Taperleaf Rear Suspension	14QK2113P4		...	...	○|○	85007	...
		14QK-2113P4		...	...	○|○	85007	...
89-94	Models with Air Cab	14QK374	–|–	83003				
		14QK376	–|–	83003				
		14QK-374	–|–	83003				
		14QK-376	–|–	83003				

APPLICATION GUIDE - TRUCKS, TRAILERS AND BUSES

Year Ano Année	Model Modelo Modle	OEM #		Front			Rear	
				Fleetline	GasSLX		Fleetline	GasSLX
MACK (CONT'D)								
MR								
01-07	MR600 Models with Hendrickson HMX 400/460 Haulmax with 16.5" Saddle	60680-004		...	...		**83143**	...
		60680-004L		...	...		**83143**	...
		60680004		...	...		**83143**	...
		60680004L		...	...		**83143**	...
		H60680004		...	...		**83143**	...
01-07	MR600 Models with Hendrickson HMX 400/460 Haulmax with 17.5" or 18.5" Saddle Height	14QK5142		...	...		**83142**	...
		14QK-5142		...	...		**83142**	...
		60680-005		...	...		**83142**	...
		60680-005L		...	...		**83142**	...
		25626196		...	...		**83142**	...
		60680005		...	...		**83142**	...
		60680005L		...	...		**83142**	...
		H60680005		...	...		**83142**	...
81-07	Models with Front Taperleaf Springs	14QK366	O|O	**85036**	**89405**		...	...
		14QK366P1	O|O	**85036**	**89405**		...	...
		14QK-366	O|O	**85036**	**89405**		...	...
		14QK-366P1	O|O	**85036**	**89405**		...	...
		25625151	O|O	**85036**	**89405**		...	...
81-07	MR600 Models with 20,000 lb Front Axle	14QK366P4	O|O	**83209**	**89414**		...	...
		14QK-366P4	O|O	**83209**	**89414**		...	...
		25625187	O|O	**83209**	**89414**		...	...
81-07	MR600 Models with Camelback Rear Suspension (SS34 & 38)	14QK2107P1		...	...	O|O	**83215**	...
		14QK2107P2		...	...	O|O	**83215**	...
		14QK-2107P1		...	...	O|O	**83215**	...
		14QK-2107P2		...	...	O|O	**83215**	...
		25625091		...	...	O|O	**83215**	...
MRU								
08-19	MRU613 Models with 20,000 lb Front Axle	14QK3115M	O|O	**85972**	...		...	...
		14QK-3115M	O|O	**85972**	...		...	...
		21002497	O|O	**85972**	...		...	...
08-19	MRU613 Models with 46,000 lb Mack Mride Rear Suspension	21979343		...	...		**85065**	...
		471700008934		...	...		**85065**	...
PINNACLE								
18-19	Models with O.E.M. Number	14QK303M		**83050**				
		14QK3103M		**83050**				
		14QK-303M		**83050**				
		14QK-3103M		**83050**				
		20874147		**83050**				
18-21	Pinnacle 64T Sleeper Cab Models with O.E.M. Number	23030654	O|O	**83910**				
		23327756	O|O	**83910**				
19-21	Models with Hendrickson 40,000 lb Pimaax EX and FireMaax EX Air Suspension	60657-007		...	...	O|O	**85072**	...
		20782199		...	...	O|O	**85072**	...
		60657007		...	...	O|O	**85072**	...
18-22	Day Cab Models with O.E.M. Number	23145372	O|O	**83066**				
18-22	Models with Hendrickson HAS 400 or 460 Series Rear Suspension	60675-001		...	...	O|O	**85978**	...
		60675-001L		...	...	O|O	**85978**	...
		8083872		...	...	O|O	**85978**	...
		60675001		...	...	O|O	**85978**	...
		60675001L		...	...	O|O	**85978**	...
19-22	Models with 12,000 lb or 14,600 lb Front Axle	20998401	O|O	**85014**	...		...	...
2018	Anthem 64T Sleeper Cab Models with O.E.M. Number	23030654	O|O	**83910**				

Year Ano Année	Model Modelo Modle	OEM #		Front			Rear	
				Fleetline	GasSLX		Fleetline	GasSLX
MACK (CONT'D)								
R								
83-85	RD Models with ST34 Suspension	14QK2133M	○|○	85001	89410		...	...
		14QK-2133M	○|○	85001	89410		...	...
		25622466	○|○	85001	89410		...	...
81-91	Models with Cab Air suspension	14QK2111P4		83019				
		14QK-2111-P4		83019				
81-91	Models with Front Taperleaf Springs	14QK366	○|○	85036	89405		...	...
		14QK366P1	○|○	85036	89405		...	...
		14QK-366	○|○	85036	89405		...	...
		14QK-366P1	○|○	85036	89405		...	...
		25625151	○|○	85036	89405		...	...
81-91	Models with Link Cabmate Model MCR600	1201-0012	○|○	83023				
		1202-0012	○|○	83023				
		12010012	○|○	83023				
		12020012	○|○	83023				
81-91	Models with O.E.M. Number	14QK382		83018				
		14QK382P2		83018				
		14QK2110	○|○	85305	...		...	...
		14QK2115	○|○	85305	...		...	...
		14QK29302	○|○	83207	89407		...	...
		14QK-382		83018				
		14QK-382-P2		83018				
		14QK-2110	○|○	85305	...		...	...
		14QK-2115	○|○	85305	...		...	...
		14QK-29302	○|○	83207	89407		...	...
		25632147	○|○	85305	...		...	...
81-91	R600 Models-3 1/2" Wide springs	14QK366P1	○|○	85036	89405		...	...
		14QK-366P1	○|○	85036	89405		...	...
81-91	R, U, RD 600 Models/ MR600 Models with Front Taperleaf Springs	14QK366	○|○	85036	89405		...	...
		14QK366P1	○|○	85036	89405		...	...
		14QK-366	○|○	85036	89405		...	...
		14QK-366P1	○|○	85036	89405		...	...
		25625151	○|○	85036	89405		...	...
89-91	RB 600 Models (Drive Axle)	14QK393M		...	...	○|○	85010	...
		14QK2107		...	...	○|○	83215	...
		14QK-393M		...	...	○|○	85010	...
		14QK-2107		...	...	○|○	83215	...
RB								
92-05	RB 600 Models (Drive Axle)	14QK2107	○|○	83209	89414		...	...
		14QK-2107	○|○	83209	89414		...	...
RD								
81-04	Models with Cab Air suspension	14QK2111P4		83019				
		14QK-2111-P4		83019				
81-04	Models with Front Taperleaf Springs	14QK366	○|○	85036	89405		...	...
		14QK366P1	○|○	85036	89405		...	...
		14QK-366	○|○	85036	89405		...	...
		14QK-366P1	○|○	85036	89405		...	...
		25625151	○|○	85036	89405		...	...
81-04	Models with O.E.M. Number	14QK382		83018				
		14QK382P2		83018				
		14QK2110	○|○	85305	...		...	...
		14QK2115	○|○	85305	...		...	...
		14QK29302	○|○	83207	89407		...	...

MACK (CONT'D)

RD (cont'd)

Year / Ano / Année	Model / Modelo / Modle	OEM #		Front			Rear	
				Fleetline	GasSLX		Fleetline	GasSLX
81-04	Models with O.E.M. Number	14QK-382		83018				
		14QK-382-P2		83018				
		14QK-2110	O|O	85305	...		...	...
		14QK-2115	O|O	85305	...		...	...
		14QK-29302	O|O	83207	89407		...	...
		25632147	O|O	85305	...		...	...
81-04	RD600 Models-3 1/2" Wide springs	14QK366P1	O|O	85036	89405		...	...
		14QK-366P1	O|O	85036	89405		...	...
2007	Models with Cab Air suspension	14QK2111P4		83019				
		14QK-2111-P4		83019				
2007	Models with Front Taperleaf Springs	14QK366	O|O	85036	89405		...	...
		14QK366P1	O|O	85036	89405		...	...
		14QK-366	O|O	85036	89405		...	...
		14QK-366P1	O|O	85036	89405		...	...
		25625151	O|O	85036	89405		...	...
2007	Models with O.E.M. Number	14QK382		83018				
		14QK382P2		83018				
		14QK2110	O|O	85305	...		...	...
		14QK2115	O|O	85305	...		...	...
		14QK29302	O|O	83207	89407		...	...
		14QK-382		83018				
		14QK-382-P2		83018				
		14QK-2110	O|O	85305	...		...	...
		14QK-2115	O|O	85305	...		...	...
		14QK-29302	O|O	83207	89407		...	...
		25632147	O|O	85305	...		...	...
2007	RD600 Models-3 1/2" Wide springs	14QK366P1	O|O	85036	89405		...	...
		14QK-366P1	O|O	85036	89405		...	...

RS

81-89	Models with Link Cabmate Model MCR600	1201-0012	O|O	83023				
		1202-0012	O|O	83023				
		12010012	O|O	83023				
		12020012	O|O	83023				

RW

85-93	RW Models - 4" Wide Springs	14QK373	O|O	83215	...		...	...
		14QK378M	O|O	83215	...		...	...
		14QK-373	O|O	83215	...		...	...
		14QK-378M	O|O	83215	...		...	...
		25623321	O|O	83215	...		...	...
85-93	RW Models with Camelback Rear Suspension (SS34 & 38)	14QK2107P1		...	...	O|O	83215	...
		14QK2107P2		...	...	O|O	83215	...
		14QK-2107P1		...	...	O|O	83215	...
		14QK-2107P2		...	...	O|O	83215	...
		25625091		...	...	O|O	83215	...
85-93	RW Models with Neway ARD-234 Air Suspension	14QK375M		...	...	O|O	83123	89405
		14QK-375M		...	...	O|O	83123	89405
85-93	RW Models with O.E.M. Number	14QK377M	O|O	83215	...		...	...
		14QK392AM	O|O	85005	89430		...	...
		14QK2113P5	O|O	85001	89410		...	...
		14QK2133M	O|O	85001	89410		...	...
		14QK2133M2	O|O	85001	89410		...	...
		14QK-377M	O|O	83215	...		...	...

APPLICATION GUIDE - TRUCKS, TRAILERS AND BUSES

Year Ano Année	Model Modelo Modle	OEM #		Front			Rear	
				Fleetline	GasSLX		Fleetline	GasSLX
MACK (CONT'D)								
RW (cont'd)								
85-93	RW Models with O.E.M. Number	14QK-392AM	O|O	**85005**	**89430**		...	...
		14QK-2113P5	O|O	**85001**	**89410**		...	...
		14QK-2133M	O|O	**85001**	**89410**		...	...
		14QK-2133M2	O|O	**85001**	**89410**		...	...
		25622466	O|O	**85001**	**89410**		...	...
85-93	RW Models with Taperleaf Rear Suspension	14QK2113P4		...	...	O|O	**85007**	...
		14QK-2113P4		...	...	O|O	**85007**	...
TD700								
10-17	TD713 Models with Hendrickson HAS 400 or 460 Series Rear Suspension	60675-001		...	...	O|O	**85978**	...
		60675-001L		...	...	O|O	**85978**	...
		8083872		...	...	O|O	**85978**	...
		60675001		...	...	O|O	**85978**	...
		60675001L		...	...	O|O	**85978**	...
10-17	TD-713 Models with 20,000 lb Front Axle	21436094	O|O	**85927**	...		...	...
10-17	TD-713 Models with Hendrickson 38,000 lb Rear Air Suspension	14QK424M		...	...	O|O	**83147**	...
		14QK-424M		...	...	O|O	**83147**	...
		60670-006		...	...	O|O	**83147**	...
		60670-006L		...	...	O|O	**83147**	...
		20570098		...	...	O|O	**83147**	...
		60670006		...	...	O|O	**83147**	...
		60670006L		...	...	O|O	**83147**	...
10-17	TD-713 Models with Hendrickson 40,000 lb Pimaax EX and FireMaax EX Air Suspension	60657-007		...	...	O|O	**85072**	...
		20782199		...	...	O|O	**85072**	...
		60657007		...	...	O|O	**85072**	...
10-17	Titan TD713 Models with Hendrickson HAS Series Rear Suspension	60675-13		...	...	O|O	**85036**	**89405**
		6067513		...	...	O|O	**85036**	**89405**
		22314111		...	...	O|O	**85036**	**89405**
TERRAPRO								
18-21	Models with 20,000 lb Front Axle	14QK3115M	O|O	**85972**	...		...	...
		14QK-3115M	O|O	**85972**	...		...	...
		21002497	O|O	**85972**	...		...	...
U								
81-89	Models with Front Taperleaf Springs	14QK366	O|O	**85036**	**89405**		...	...
		14QK366P1	O|O	**85036**	**89405**		...	...
		14QK-366	O|O	**85036**	**89405**		...	...
		14QK-366P1	O|O	**85036**	**89405**		...	...
		25625151	O|O	**85036**	**89405**		...	...
ADDITIONAL APPLICATIONS								
06-16	Models with Hendrickson 40,000 lb Primaax, Pimaax EX and FireMaax EX Air Suspension	60657-007		...	...	O|O	**85072**	...
		60657007		...	...	O|O	**85072**	...
75-79	W Models - Western	.....	O|O	**83207**	**89407**		...	...
		.....		...	...	O|O	**83215**	...
	B Models	14QK142		...	...	O|O	**85305**	...
		14QK-142		...	...	O|O	**85305**	...
	CF Fire Chassis	14QK2102		...	...	O|O	**85304**	...
		14QK-2102		...	...	O|O	**85304**	...
	CM 422 Tractor	14QK390	–|O	**83105**	...		...	...
		14QK-390	–|O	**83105**	...		...	...
		V10242320	–|O	**83105**	...		...	...

MACK (CONT'D)

ADDITIONAL APPLICATIONS (cont'd)

Year Ano Année	Model Modelo Modle	OEM #		Front Fleetline	Front GasSLX		Rear Fleetline	Rear GasSLX
	MB Models	.....		...	...	O|O	83215	...
		.....	O|O	83221	...		...	...
		14QK2100P4	O|O	83207	89407		...	...
		14QK-2100P4	O|O	83207	89407		...	...
	Model 75 Bogie Axle	.....		...	...	O|O	83215	...
	Models with Hendrickson AirTek Front Air Suspension	14QK422M	O|O	85933	89454		...	...
		14QK-422M	O|O	85933	89454		...	...
		64838-002	O|O	85933	89454		...	...
		20469001	O|O	85933	89454		...	...
		20469002	O|O	85933	89454		...	...
		20485632	O|O	85933	89454		...	...
		20485633	O|O	85933	89454		...	...
		64838002	O|O	85933	89454		...	...
		471700131921	O|O	85933	89454		...	...
	Models with Hendrickson HAS-40LH Air Suspension (O.E. Number 57241-4)	14QK413M4		...	...		83110	...
		14QK-413M4		...	...		83110	...
	Models with Inverted Camelback Spring Suspension	14QK142P1	O|O	83215	...		...	...
		14QK-142P1	O|O	83215	...		...	...
	Models with Link Cab Suspension	1202-0012	O|O	83023				
		1202-0032	O|O	83016				
		12020012	O|O	83023				
		12020032	O|O	83016				
	Models with MAC AL405 Suspension	14QK413M		...	...		83111	...
		14QK-413M		...	...		83111	...
	Models with Meritor AirLink Suspension	14QK3100		...	...	O|O	85739	...
		14QK-3100		...	...	O|O	85739	...
		446-51-211		...	...	O|O	85739	...
		44651211		...	...	O|O	85739	...
	Models with Neway Rear Suspension (With O.E.Stamping 90045099)	25633154		...	...	O|O	85906	89407
	Models with O.E.M. Number	14QK391BM2	–|–	83041				
		14QK391M	–|–	83041				
		14QK391M2	–|–	83041				
		14QK439M		83050				
		14QK2111		83019				
		14QK2111P2		83019				
		14QK-391BM2	–|–	83041				
		14QK-391M	–|–	83041				
		14QK-391M2	–|–	83041				
		14QK-439M		83050				
		14QK-2111		83019				
		14QK-2111-P2		83019				
		21154393		83050				
		25622612	–|–	83041				
		25622613	–|–	83041				
		25624837	–|–	83041				

CH

06-08	CH600 Models with Neway AD Air Suspension Shock w/ extended length of 21.70"	14QK414M		...	...	O|O	85906	89407
		14QK-414M		...	...	O|O	85906	89407
		90045099		...	...	O|O	85906	89407
06-08	CH600 Models with Neway AD Air Suspension Shock w/ extended length of 24.30"	14QK414M2		...	...	O|O	85909	...
		14QK-414M2		...	...	O|O	85909	...
		25624351		...	...	O|O	85909	...

APPLICATION GUIDE - TRUCKS, TRAILERS AND BUSES

Year Ano Année	Model Modelo Modle	OEM #		Front			Rear	
				Fleetline	GasSLX		Fleetline	GasSLX
MACK (CONT'D)								
CH (cont'd)								
06-08	CH600 Models with ST34 Suspension	14QK2133M	O|O	85001	89410		...	...
		14QK-2133M	O|O	85001	89410		...	...
		25622466	O|O	85001	89410		...	...
CHU								
04-07	CHU-613 Models with Hendrickson 38,000 lb Rear Air Suspension	14QK424M		...	...	O|O	83147	...
		14QK-424M		...	...	O|O	83147	...
		60670-006		...	...	O|O	83147	...
		60670-006L		...	...	O|O	83147	...
		20570098		...	...	O|O	83147	...
		60670006		...	...	O|O	83147	...
		60670006L		...	...	O|O	83147	...
04-07	CHU-613 Models with Hendrickson HAS 400 or 460 Series Rear Suspension	60675-001		...	...	O|O	85978	...
		60675-001L		...	...	O|O	85978	...
		8083872		...	...	O|O	85978	...
		60675001		...	...	O|O	85978	...
		60675001L		...	...	O|O	85978	...
CHU - SERIES								
2007	CHU-613 Models with 40,000 lb Rear Air Suspensions	14QK2136M		...	...	O|O	85061	89450
		14QK-2136M		...	...	O|O	85061	89450
		20897198		...	...	O|O	85061	89450
CS, MS - MID - LINER SERIES								
80-01	MS200, MS300 Models Mid-Liner	V10234121	–|O	83105	...		...	...
86-01	CS Models Mid-Liner with O.E.M Number	4103-5000447861	–|O	83105	...		...	...
		4103-5000546892	–|O	83105	...		...	...
		41035000447861	–|O	83105	...		...	...
		41035000546892	–|O	83105	...		...	...
		V10234121	–|O	83105	...		...	...
		V10242320	–|O	83105	...		...	...
CTX								
	Models with O.E.M. Number	14QK303M		83050				
		14QK3103M		83050				
		14QK-303M		83050				
		14QK-3103M		83050				
		20874147		83050				
CXN SERIES								
	DayCab Models with O.E.M. Number	21345869	O|O	83066				
F SERIES								
	Fire Truck	.....	O|O	85302	89420		...	...
	FL Models - Western	14QK143	O|O	83207	89407		...	...
		14QK2100P4	O|O	83207	89407		...	...
		14QK-143	O|O	83207	89407		...	...
		14QK-2100P4	O|O	83207	89407		...	...
	F Models (exc. Eastern)	.....	O|O	83207	89407		...	...
		.....		...	...	O|O	83215	...
	F Models - Eastern	.....	O|O	83221	...		...	...
	F Models with Standard Suspension	.....		...	...	O|O	85305	...
GRANITE								
01-14	Models with Hendrickson HMX 400/460 Haulmax with 16.5" Saddle	60680-004		...	...		83143	...

Year Ano Année	Model Modelo Modle	OEM #		Front			Rear	
				Fleetline	GasSLX		Fleetline	GasSLX
MACK (CONT'D)								
GRANITE (cont'd)								
01-14	Models with Hendrickson HMX 400/460 Haulmax with 16.5" Saddle	60680-004L		...	...		83143	...
		60680004		...	...		83143	...
		60680004L		...	...		83143	...
		H60680004		...	...		83143	...
01-14	Models with Hendrickson HMX 400/460 Haulmax with 17.5" or 18.5" Saddle Height	14QK5142		...	...		83142	...
		14QK-5142		...	...		83142	...
		60680-005		...	...		83142	...
		60680-005L		...	...		83142	...
		25626196		...	...		83142	...
		60680005		...	...		83142	...
		60680005L		...	...		83142	...
		H60680005		...	...		83142	...
GRANITE SERIES								
	GU-713 or GU-813 Models O.E.M. Number	21687170	O|O	85120	...		...	...
	GU-713 or GU-813 Models with 46,000 lb Mack Mride Rear Suspension To 2012	21979343		...	...		85065	...
	Models with O.E.M. Number	21979343		...	...		85065	...
		471700008934		...	...		85065	...
LE								
11-16	LE & LEU 613 Models with Ridewell RD-202S HD Tandem Drive Truck Suspension	1252607B000		...	...	O|O	85702	...
2009	LEU 613 Models with 18,000 lb Front Axle	14QK372M2	O|O	83209	89414		...	...
		14QK-372M2	O|O	83209	89414		...	...
		25632561	O|O	83209	89414		...	...
LEU								
01-06	LE 613 Models with O.E.M Number	14QK366P4	O|O	83209	89414		...	...
		14QK-366P4	O|O	83209	89414		...	...
		25625187	O|O	83209	89414		...	...
2001	Models with Hendrickson HMX 400/460 Haulmax with 17.5" or 18.5" Saddle Height	60680-005		...	...		83142	...
MD6								
2023	Models with 10,000 lb Taperleaf Springs	78530771	O|O	83127	...		...	...
		471700015341	O|O	83127	...		...	...
2023	Models with O.E.M. Number	23145372	O|O	83066				
MR								
2008	MR600 Models with 20,000 lb Front Axle	14QK366P4	O|O	83209	89414		...	...
		14QK-366P4	O|O	83209	89414		...	...
		25625187	O|O	83209	89414		...	...
2008	MR600 Models with Camelback Rear Suspension (SS34 & 38)	14QK2107P1		...	...	O|O	83215	...
		14QK2107P2		...	...	O|O	83215	...
		14QK-2107P1		...	...	O|O	83215	...
		14QK-2107P2		...	...	O|O	83215	...
		25625091		...	...	O|O	83215	...
2008	MR600 Models with Hendrickson HMX 400/460 Haulmax with 16.5" Saddle	60680-004		...	...		83143	...
		60680-004L		...	...		83143	...
		60680004		...	...		83143	...
		60680004L		...	...		83143	...
		H60680004		...	...		83143	...
2008	MR600 Models with Hendrickson HMX 400/460 Haulmax with 17.5" or 18.5" Saddle Height	14QK5142		...	...		83142	...

Year Ano Année	Model Modelo Modle	OEM #		Front			Rear	
				Fleetline	GasSLX		Fleetline	GasSLX
MACK (CONT'D)								
MR (cont'd)								
2008	MR600 Models with Hendrickson HMX 400/460 Haulmax with 17.5" or 18.5" Saddle Height	14QK-5142		...	...		83142	...
		60680-005		...	...		83142	...
		60680-005L		...	...		83142	...
		25626196		...	...		83142	...
		60680005		...	...		83142	...
		60680005L		...	...		83142	...
		H60680005		...	...		83142	...
MR SERIES								
08-19	MRU613 Models with O.E.M. Number	14QK366P4	O|O	83209	89414		...	...
		14QK-366P4	O|O	83209	89414		...	...
		25625187	O|O	83209	89414		...	...
	Additional O.E.M. Interchanges	14QK140P1	O|O	83225				
		14QK282P1	O|O	83216	...		...	...
		14QK282P3	O|O	83216	...		...	...
		14QK372M	O|O	83221				
		14QK392M	O|O	85005	89430		...	...
		14QK2100	O|O	83221				
		14QK2100P1	O|O	83221				
		14QK2110P1	O|O	85305	...		...	...
		14QK20001P2	O|O	85308 or 89422				
		14QK29302P1	O|O	83207 or 89407				
		14QK-140P1	O|O	83225				
		14QK-282P1	O|O	83216	...		...	...
		14QK-282P3	O|O	83216	...		...	...
		14QK-372M	O|O	83221				
		14QK-392M	O|O	85005	89430		...	...
		14QK-2100	O|O	83221				
		14QK-2100P1	O|O	83221				
		14QK-2110P1	O|O	85305	...		...	...
		14QK-20001P2	O|O	85308 or 89422				
		14QK-29302P1	O|O	83207 or 89407				
		70042	O|O	85302 or 89420				
		650102	O|O	85001 or 89410				
		650107	–|O	85316	89426		...	...
		650107MT	–|O	85316	89426		...	...
		650400MT		...	...	–|O	85033	89427
		650402		...	...	–|O	85311	89424
		650402MT		...	...	–|O	85311	89424
		650404		...	...	–|–	85310	89423
		650404MT		...	...	–|–	85310	89423
		650405	O|O	85023 or 89415				
		650405MT	O|O	85023 or 89415				
		650406		...	...	O|O	85024	...
		650408		...	...	–|O	85319	89428
		650408MT		...	...	–|O	85319	89428
		651012	O|O	83221				
		651151	O|O	83209 or 89414				
		4940654	O|O	83216				
		5533699	O|O	85302 or 89420				
		5554184	O|O	85302 or 89420				
	Models with O.E.M. Number	14QK140	O|O	85304	...		...	...
		14QK142AP1	O|O	83215	...		...	...

APPLICATION GUIDE - TRUCKS, TRAILERS AND BUSES

MACK (CONT'D)

Year Ano Année	Model Modelo Modle	OEM #		Front			Rear	
				Fleetline	GasSLX		Fleetline	GasSLX
	Models with O.E.M. Number	14QK145	O|O	85307	...		...	...
		14QK288P1	O|O	85007	...		...	...
		14QK366P2	O|O	85036	89405		...	...
		14QK366P3	O|O	85036	89405		...	...
		14QK372M3	O|O	83122	89406		...	...
		14QK378	O|O	83215	...		...	...
		14QK423M		...	...	O|O	85978	...
		14QK428		85080	...		...	...
		14QK428M		85080	...		...	...
		14QK1200P4	O|O	83207	89407		...	...
		14QK2100P2	O|O	83209	89414		...	...
		14QK2100P3	O|O	83207	89407		...	...
		14QK2100P5	O|O	83221	...		...	...
		14QK2100P6	O|O	85036	89405		...	...
		14QK2100P7	O|O	83221	...		...	...
		14QK2105	O|O	83209	89414		...	...
		14QK2107P3	O|O	83215	...		...	...
		14QK2108	O|O	83203	89436		...	...
		14QK2108P1	O|O	83203	89436		...	...
		14QK2113P3	O|O	85001	89410		...	...
		14QK29001P2	O|O	85303	89422		...	...
		14QK29301P1	O|O	83207	89407		...	...
		14QK29301P2	O|O	83207	89407		...	...
		14QK-140	O|O	85304	...		...	...
		14QK-142AP1	O|O	83215	...		...	...
		14QK-145	O|O	85307	...		...	...
		14QK-288-P1	O|O	85007	...		...	...
		14QK-366P2	O|O	85036	89405		...	...
		14QK-366P3	O|O	85036	89405		...	...
		14QK-372M3	O|O	83122	89406		...	...
		14QK-378	O|O	83215	...		...	...
		14QK-423M		...	...	O|O	85978	...
		14QK-428		85080	...		...	...
		14QK-428M		85080	...		...	...
		14QK-1200P4	O|O	83207	89407		...	...
		14QK-2100P2	O|O	83209	89414		...	...
		14QK-2100P3	O|O	83207	89407		...	...
		14QK-2100P5	O|O	83221	...		...	...
		14QK-2100P6	O|O	85036	89405		...	...
		14QK-2100P7	O|O	83221	...		...	...
		14QK-2105	O|O	83209	89414		...	...
		14QK-2107P3	O|O	83215	...		...	...
		14QK-2108	O|O	83203	89436		...	...
		14QK-2108P1	O|O	83203	89436		...	...
		14QK-2113P3	O|O	85001	89410		...	...
		14QK-29001P2	O|O	85303	89422		...	...
		14QK-29301P1	O|O	83207	89407		...	...
		14QK-29301P2	O|O	83207	89407		...	...
		5966-90044025	O|O	83209	89414		...	...
		57241-004		...	...		83110	...
		651103	O|O	85036	89405		...	...
		25621571	O|O	83215	...		...	...
		25626149		85080	...		...	...
		57241004		...	...		83110	...
		471700000451		85080	...		...	...

APPLICATION GUIDE - TRUCKS, TRAILERS AND BUSES

Year Ano Année	Model Modelo Modle	OEM #		Front			Rear	
				Fleetline	GasSLX		Fleetline	GasSLX
MACK (CONT'D)								
	Models with O.E.M. Number	596690044025	O|O	83209	89414		...	...
TD - TITAN SERIES								
08-09	TD-713 Models with 20,000 lb Front Axle	14QK493M	O|O	83101	...		...	...
		14QK-493M	O|O	83101	...		...	...
		21155033	O|O	83101	...		...	...
MAECO								
	Additional O.E.M. Interchanges	1085		...	...	O|O	83214	...
		6025	O|O	83122 or 89406				
		6026		...	...	O|O	83204	...
		12608	O|O	83125				
		12788	O|O	83216				
		12866	O|O	83207 or 89407				
		16385	O|O	83215				
		16720	O|O	83107	...		...	...
		16767	O|O	85013 or 89414				
		16769	O|O	83221				
		16770	O|O	83209 or 89414				
		16771	O|O	83126 or 89430				
		16772	O|O	83122 or 89406				
		16773	O|O	85005	89430		...	...
		16774	O|O	83215				
		16775	O|O	83207 or 89407				
		16776	O|O	83122 or 89406				
		16777	O|O	85006				
		16778	O|O	83203 or 89436				
		16779	O|O	83126 or 89430				
		16780		...	...	O|O	83123	89405
		16781	O|O	85006				
		16787	O|O	85030 or 89440				
		70018		...	...	O|O	85303	89422
		70021		...	...	O|O	85303	89422
		70029	O|O	85308	89422		...	...
		70034	O|O	85302 or 89420				
		70039	O|O	85303	89422		...	...
		70041	O|O	85305	...		...	...
		70042	O|O	85302 or 89420				
		70088	O|O	85307				
		70123	O|O	85716				
		70127	O|O	85006	...		...	...
		70128	O|O	85006				
		70162	O|O	85716				
		70163	O|O	85302 or 89420				
		70164	O|O	85716				
		70300	O|O	85320	89429		...	...
		70312	O|O	85001 or 89410				
		70315	O|O	85063	...		...	...
		70317	O|O	89402	...		...	...
		70331		...	...	O|O	85314	89425
		70332	O|O	83314	...		...	...
		70334	–|O	85316	89426		...	...
		70397	O|O	85006				
		70402	O|O	85305				
		70642	O|O	85300 or 89419				
		70644	O|O	85334	...		...	...

APPLICATION GUIDE - TRUCKS, TRAILERS AND BUSES

Year Ano Année	Model Modelo Modle	OEM #		Front			Rear	
				Fleetline	GasSLX		Fleetline	GasSLX
MAECO (CONT'D)								
	Additional O.E.M. Interchanges	70648	O|O	89414				
		70648		...	...	O|O	89414	...
		70650	O|O	89440				
		70650		...	...	O|O	89440	...
		70651	O|O	85013 or 89414				
		70652	O|O	85030	89440		...	...
		70663	O|O	85013 or 89414				
		70691		...	...	O|O	85007	...
		70720		...	...	O|O	85934	...
		70721	O|O	83125				
		74039	O|O	85303 or 89422				
		OE10881	–|O	85711				
		OE10882		...	...		85740	...
		OE10883		...	...	O|O	85339	...
		OE12425	O|O	83214				
		SC2920	O|O	83176				
		SC-2920	O|O	83176				
	Bus with O.E.M. Number	1668722	O|O	85030	89440		...	...
	FedEx Trucks with O.E.M. Number	16950	O|O	83118	...		...	...
	UPS Trucks with O.E.M. Number	16949		...	...		83120	...
MAN BUS								
	Americana Bus with O.E.M. Numbers	25-1700-106-654		...	...	–|–	85708	...
		81-43701-6543		...	...	–|–	85708	...
		81-43701-6572	–|–	85708	...		...	...
		81-43701-6573	–|–	85722	...		...	...
		81437016543		...	...	–|–	85708	...
		81437016572	–|–	85708	...		...	...
		81437016573	–|–	85722	...		...	...
		251700106654		...	...	–|–	85708	...
	Articulating Bus - Drive Axle	81-43701-6537		...	...	–|–	85709	...
		81437016537		...	...	–|–	85709	...
	Articulating Bus - Front Axle	81-43701-6538	–|–	85708	...		...	...
		81437016538	–|–	85708	...		...	...
	Articulating Bus - Trailing Axle	81-43701-6539		...	...	–|–	85708	...
		81437016539		...	...	–|–	85708	...
	Models with O.E.M. Number	81-43701-6609		...	...	–|–	85709	...
		134		...	...	–|–	85709	...
		9020M1042		...	...	–|–	85709	...
		9020M-1042		...	...	–|–	85709	...
		81437016609		...	...	–|–	85709	...
MANDALAY COACH								
CLASS A MOTORHOMES								
04-06	Mandalay Series MotorHomes with Freightliner XC Chassis	16-16736-000		...	...	O|O	85029	...
		16-16737-000	O|O	83160	...		...	...
		16-16873-000		...	...	O|O	85029	...
		16-16874-000	O|O	83160	...		...	...
		16-18103-000	–|–	85900	...		...	...
		1616736000		...	...	O|O	85029	...
		1616737000	O|O	83160	...		...	...
		1616873000		...	...	O|O	85029	...
		1616874000	O|O	83160	...		...	...
		1618103000	–|–	85900	...		...	...
		141700131809		...	...	O|O	85029	...

Year Ano Année	Model Modelo Modle	OEM #		Front			Rear	
				Fleetline	GasSLX		Fleetline	GasSLX
MANDALAY COACH (CONT'D)								
CLASS A MOTORHOMES (cont'd)								
04-06	Mandalay Series MotorHomes with Freightliner XC Chassis	141700131810	○|○	**83160**	...		...	...
		481700000493	–|–	**85900**	...		...	...
2006	Presidio & Valencia Series MotorHomes with Freightliner XC Chassis	16-16736-000		...	...	○|○	**85029**	...
		16-16737-000	○|○	**83160**	...		...	...
		16-16874-000	○|○	**83160**	...		...	...
		16-18103-000	–|–	**85900**	...		...	...
		1616736000		...	...	○|○	**85029**	...
		1616737000	○|○	**83160**	...		...	...
		1616874000	○|○	**83160**	...		...	...
		1618103000	–|–	**85900**	...		...	...
		141700131809		...	...	○|○	**85029**	...
		141700131810	○|○	**83160**	...		...	...
		481700000493	–|–	**85900**	...		...	...
MARMON								
81-97	Conventional Tractors with Link Cabmate Model MARC57-B	1202-0054	○|○	**83021**				
		12020054	○|○	**83021**				
	Models with O.E.M. Number	1-7001	○|○	**83216**	...		...	...
		37-1-1	○|○	**83122**	**89406**		...	...
		51-139-28		...	...	○|○	**85003**	**89411**
		51-163-7		...	...	○|○	**83123**	**89405**
		3711	○|○	**83122**	**89406**		...	...
		17001	○|○	**83216**	...		...	...
		511637		...	...	○|○	**83123**	**89405**
		576451	○|○	**83122**	**89406**		...	...
		665147	○|○	**83216**	...		...	...
		5113928		...	...	○|○	**85003**	**89411**
MATSON SCHOOL BUS								
	Models with O.E.M. Number	5392387	○|○	**85303**	**89422**		...	...
MC NEILUS TRUCK & MAN.								
	Booster Axles	600-115994B	○|○	**632147**				
		1170719	○|○	**632147**				
	Bridgemaster V models with Self - Steering Axle Shocks	600-188206	○|○	**646155**				
	Mc Neilus part number	1KK552 MTM		...	...	○|○	**85967**	...
		3HR582 MTM		...	...	○|○	**85013**	**89414**
		3HR916 MTM		...	...	○|○	**83207**	**89407**
		4HA569 MTM	○|○	**85932**	**89453**		...	...
		4KP398 MTM	○|○	**85933**	**89454**		...	...
		5HA994 MTM		...	...	○|○	**85916**	**89430**
		5HB645 MTM		...	...		**83109**	...
		5KK247 MTM		...	...		**85977**	...
		6HA961 MTM		...	...	○|○	**83123**	**89405**
		6HB390 MTM		...	...	○|○	**83137**	...
		6HD720 MTM		...	...	○|○	**85909**	...
		6HS773 MTM		...	...	○|○	**83122**	**89406**
		6KP857 MTM		...	...	○|○	**85000**	**89436**
		7HS237 MTM		...	...	○|○	**83122**	**89406**
		7HS534 MTM		...	...	○|○	**85906**	**89407**
		8KK524 MTM		...	...	○|○	**83168**	...
		9HB362 MTM		...	...	○|○	**85976**	...
		9KK464 MTM		...	...	○|○	**85079**	...
		12405FX1 MTM	○|○	**85303**	**89422**		...	...

Year Ano Année	Model Modelo Modle	OEM #		Front			Rear	
				Fleetline	GasSLX		Fleetline	GasSLX
MC NEILUS TRUCK & MAN. (CONT'D)								
	Mc Neilus part number	64442AX MTM		...	...	O|O	83128	89436
		1139039 MTM	O|O	85334	...		...	...
		1139046 MTM		...	...		83112	...
		1139059 MTM		...	...	O|O	83207	89407
		1139069 MTM		...	...	O|O	83209	89414
		1323106 MTM		...	...	O|O	85305	...
		1333575 MTM		...	...	O|O	85072	...
		1340975 MTM		...	...		83142	...
		1340976 MTM	O|O	85919	...		...	...
		1340979 MTM		...	...		83143	...
		1360386 MTM		...	...	O|O	85323	89436
		1367383 MTM		...	...	O|O	83147	...
		1396513 MTM	O|O	85959	...		...	...
		1398980 MTM		...	...	O|O	83127	...
		1404068 MTM		...	...	O|O	85087	...
		1410046 MTM	O|O	85919	...		...	...
		1411765 MTM		...	...	O|O	83148	...
		1429317 MTM	O|O	85919				
		1431085 MTM		...	...	O|O	85738	...
		1432386 MTM		...	...	O|O	85965	...
		1433009 MTM		...	...	O|O	85962	...
		1468783 MTM		...	...	O|O	85345	...
		1485576 MTM		...	...	O|O	85979	...
		1491909 MTM		...	...	O|O	83128	89436
		2218640 MTM	O|O	83009				
		3215395 MTM		...	...		83112	...
	Models with O.E.M. Number	600-11599M	O|O	632147				
		217330	O|O	85303 or 89422				
		1473224	O|O	646155				
		2034140 MTM	O|O	646155				
	Pusher Axles	600-115994B	O|O	632147				
MERITOR								
FS230 TRAILER SUSPENSION								
	FS230T	671020		...	...	O|O	87015	...
		21227751		...	...	O|O	87015	...
	FS230 Trailer Suspension (Light Duty)	680705		...	...	O|O	85737	...
		A7805P1030		...	...	O|O	85737	...
		A-7805P-1030		...	...	O|O	85737	...
	FS230 Trailer Suspension (Std Duty)	671507		...	...	O|O	87015	...
		A7805L1026		...	...	O|O	87015	...
		A-7805L-1026		...	...	O|O	87015	...
	Meritor Kit 11210 includes washers and nuts (For Shock only)	KIT11210		...	...	O|O	87015	...
MTA 25T / MTA 30T TRAILER AIR SUSPENSION								
	Meritor Kit 11375 includes other components (For Shock only)	KIT11375		...	...	O|O	86200	...
	Meritor Kit 11376 includes other components (For Shock only)	KIT11376		...	...	O|O	86200	...
	Meritor Kit 11389 includes other components (For Shock only)	KIT11389		...	...	O|O	86200	...
	Meritor Kit 11402 includes other components (For Shock only)	KIT11402		...	...	O|O	86200	...
	MTA 25T / MTA 30T Trailer Air Suspension	7805F1020		...	...	O|O	86200	...
		7805-F-1020		...	...	O|O	86200	...
		671506		...	...	O|O	86200	...
		A7805F1020		...	...	O|O	86200	...
		A-7805F-1020		...	...	O|O	86200	...
	Air Link Suspensions with O.E.M. Number	14QK3100		...	...	O|O	85739	...

APPLICATION GUIDE - TRUCKS, TRAILERS AND BUSES

Year Ano Année	Model Modelo Modle	OEM #		Front			Rear	
				Fleetline	GasSLX		Fleetline	GasSLX
MERITOR (CONT'D)								
	Air Link Suspensions with O.E.M. Number	14QK-3100		...	...	O|O	85739	...
		446-51-211		...	...	O|O	85739	...
		44651211		...	...	O|O	85739	...
	AL460 Air Link Suspension	700115		...	...	O|O	85712	...
	AL520 Air Link Suspension	700115		...	...	O|O	85712	...
	RFS 23T / 25T / 30T Trailer Air Suspensions	21227751		...	...	O|O	87015	...
		A7805L1026		...	...	O|O	87015	...
		A-7805L-1026		...	...	O|O	87015	...
RHP TRAILER SUSPENSION								
01-21	RHP11, RHP55 and RideSentry Trailer Suspension	671907		...	...	O|O	85919	...
		A7805L1000		...	...	O|O	85919	...
		A-7805L-1000		...	...	O|O	85919	...
97-21	RHP11, RHP55 and RideSentry Trailer Suspension	202447		...	...	O|O	85919	...
		A3280M9711		...	...	O|O	85919	...
		A-3280-M-9711		...	...	O|O	85919	...
MITSUBISHI FUSO								
FE145								
05-11	Models with O.E.M. Number	MK302296	−|O	G63610	...		...	...
		MK433638	−|O	G63610	...		...	...
FH								
88-96	FH100 Suspension (All)	MC809390	−|−	83103	...		...	...
FK								
88-91	FK455 Models with O.E.M. Number	MC814614	−|O	85009	...		...	...
91-94	FK457 Models with O.E.M. Number	MC814614	−|O	85009	...		...	...
FM								
88-91	FM555 Models with O.E.M. Number	MC814614	−|O	85009	...		...	...
89-93	FM557 Models with O.E.M. Number	MC814614	−|O	85009	...		...	...
FM330								
05-11	Models with O.E.M. Number	MC091950	−|O	83162	...		...	...
MITSUBISHI-FUSO								
FE SERIES								
96-02	FE639, FE640, FE649	MC114595		...	...	O|O	G63405	...
		.....	−|O	G63610	...		...	...
86-21	FE434, FE439, FE444, FE450 From 07/86	MB161497		...	...	O|O	G63299	...
FG SERIES								
98-02	FG639, FG649	MC714595		...	...	O|O	G63405	...
FH SERIES								
87-02	FH211 , FH211T	MC826268	−|O	G63610	...		...	...
87-96	FH100 Suspension (All) From 10/87	MC826268	−|O	G63610	...		...	...
FM SERIES								
85-88	FM555 From 11/85 To 05/88	MC813135	−|−	83456	89447		...	...
2000	FM617, FM657	MC091947	−|O	83162	...		...	...
MOHAWK								
	Additional O.E.M. Interchanges	01-0100-905	O|O	85303 or 89422				

Year Ano Année	Model Modelo Modle	OEM #		Front			Rear	
				Fleetline	GasSLX		Fleetline	GasSLX
MOHAWK (CONT'D)								
	Additional O.E.M. Interchanges	6-367-7	O|O	**85305**				
		97-2201-00011		...	...	O|O	**85704**	...
		97-9999-02320		...	...	O|O	**85704**	...
		63677	O|O	**85305**				
		680323	O|O	**85700**				
		680485		...	...		**85733**	...
		1235233	O|O	**85736**				
		4968853	O|O	**83216**				
		010100905	O|O	**85303 or 89422**				
		020273544	O|O	**83203**	**89436**		...	...
		22012082	O|O	**85702**				
		22012114	O|O	**85700**	...		...	...
		050134508	O|O	**85732**	...		...	...
		97220100011		...	...	O|O	**85704**	...
		97999902320		...	...	O|O	**85704**	...
		MM6886	O|O	**83207 or 89407**				
		MM6957	O|O	**83225**				
		MM74029	O|O	**85308 or 89422**				
		MM-6886	O|O	**83207 or 89407**				
		MM-6957	O|O	**83225**				
		MM-74029	O|O	**85308 or 89422**				
MONACO								
CLASS A MOTORHOMES								
00-03	Models with Roadmaster Chassis RM4C or used on Knight	01809924	O|O	**83144**	...		...	...
00-03	Models with Workhorse W22 Chassis with 8.1L Gas Monarch, LaPalma	01809925	O|O	**85010**	...		...	...
01-04	Vacationer Models with W20 & W22 Workhorse Motorhome Chassis	24-153249	O|O	**85125**	...		...	...
		24-186629	O|O	**85125**	...		...	...
		24153249	O|O	**85125**	...		...	...
		24186629	O|O	**85125**	...		...	...
		F4BE5A832MO	O|O	**85125**	...		...	...
		F4BE5B492HO	O|O	**85125**	...		...	...
		F4BE5F324HO	O|O	**85125**	...		...	...
		F4-BE5-A832-MO	O|O	**85125**	...		...	...
		F4-BE5-B492-HO	O|O	**85125**	...		...	...
		F4-BE5-F324-HO	O|O	**85125**	...		...	...
		W0005662	O|O	**85125**	...		...	...
		W0006254	O|O	**85125**	...		...	...
04-07	Models with Roadmaster Chassis R4R, used on Cayman	.....	O|O	**83144**	...		...	...
01-10	Monarch and LaPalma Models with W20 & W22 Workhorse Motorhome Chassis	24-153249	O|O	**85125**	...		...	...
		24-186629	O|O	**85125**	...		...	...
		24153249	O|O	**85125**	...		...	...
		24186629	O|O	**85125**	...		...	...
		F4BE5A832MO	O|O	**85125**	...		...	...
		F4BE5B492HO	O|O	**85125**	...		...	...
		F4BE5F324HO	O|O	**85125**	...		...	...
		F4-BE5-A832-MO	O|O	**85125**	...		...	...
		F4-BE5-B492-HO	O|O	**85125**	...		...	...
		F4-BE5-F324-HO	O|O	**85125**	...		...	...
		W0005662	O|O	**85125**	...		...	...
		W0006254	O|O	**85125**	...		...	...
98-11	All Models with W20 & W22 Workhorse Motorhome Chassis	24-153249	O|O	**85125**	...		...	...
		24-186629	O|O	**85125**	...		...	...
		24153249	O|O	**85125**	...		...	...

Year Ano Année	Model Modelo Modle	OEM #		Front			Rear	
				Fleetline	GasSLX		Fleetline	GasSLX
MONACO (CONT'D)								
CLASS A MOTORHOMES (cont'd)								
98-11	All Models with W20 & W22 Workhorse Motorhome Chassis	24186629	O|O	**85125**	...		...	...
		F4BE5A832MO	O|O	**85125**	...		...	...
		F4BE5B492HO	O|O	**85125**	...		...	...
		F4BE5F324HO	O|O	**85125**	...		...	...
		F4-BE5-A832-MO	O|O	**85125**	...		...	...
		F4-BE5-B492-HO	O|O	**85125**	...		...	...
		F4-BE5-F324-HO	O|O	**85125**	...		...	...
		W0005662	O|O	**85125**	...		...	...
		W0006254	O|O	**85125**	...		...	...
99-14	Monarch and LaPalma Series MotorHomes with Ford F53 Chassis with 16,000 lb GVW to 22,000 lb GVW	1C34-18045-AA	O|O	**83209**	**89414**		...	...
		1C34-18045-JA	O|O	**83209**	**89414**		...	...
		9U9Z-18124-A	O|O	**83209**	**89414**		...	...
		9U94-18045-AA	O|O	**83209**	**89414**		...	...
		ASH-294	O|O	**83209**	**89414**		...	...
		ASH-1022	O|O	**83209**	**89414**		...	...
		ASH-1205	O|O	**83209**	**89414**		...	...
		ASH-1228	O|O	**83209**	**89414**		...	...
		ASH-1229	O|O	**83209**	**89414**		...	...
		ASH-25822	O|O	**83209**	**89414**		...	...
		ASH-25823	O|O	**83209**	**89414**		...	...
		AT-620	O|O	**83209**	**89414**		...	...
		AT-766	O|O	**83209**	**89414**		...	...
90-97	Monarch and LaPalma Models with F53 Motorhome Chassis (7.5 L, Gas V8)	.....	O|O	**83209**	**89414**		...	...
	Models with Workhorse UFO Chassis with Hendrickson Softek Front Suspension	66153-002	O|O	**83124**	**89407**		...	...
		66153002	O|O	**83124**	**89407**		...	...
		F4BE5C832MO	O|O	**83124**	**89407**		...	...
		F4-BE5-C832-MO	O|O	**83124**	**89407**		...	...
95-99	MotorHomes with Freightliner XC Chassis (22,000 to 26,000 lb GVW)	.....	O|O	**83160**	...		...	...
		.....		...	...	O|O	**85029**	...
MONACO COACH								
LA PALMA								
02-04	MotorHomes with Ford F53 Chassis with 16,000 lb GVW to 22,000 lb GVW	9U9Z18125A		...	...	O|O	**83122**	**89406**
		9U9Z-18125-A		...	...	O|O	**83122**	**89406**
		9U94-18080-AA		...	...	O|O	**83122**	**89406**
		9U9418080AA		...	...	O|O	**83122**	**89406**
		ASH137		...	...	O|O	**83122**	**89406**
		ASH1023		...	...	O|O	**83122**	**89406**
		ASH1206		...	...	O|O	**83122**	**89406**
		ASH1230		...	...	O|O	**83122**	**89406**
		ASH25824		...	...	O|O	**83122**	**89406**
		ASH-137		...	...	O|O	**83122**	**89406**
		ASH-1023		...	...	O|O	**83122**	**89406**
		ASH-1206		...	...	O|O	**83122**	**89406**
		ASH-1230		...	...	O|O	**83122**	**89406**
		ASH-25824		...	...	O|O	**83122**	**89406**
		AT621		...	...	O|O	**83122**	**89406**
		AT-621		...	...	O|O	**83122**	**89406**
02-06	Models with W20 & W22 Workhorse Motorhome Chassis	24-153249	O|O	**85125**	...		...	...
		24-186629	O|O	**85125**	...		...	...
		24153249	O|O	**85125**	...		...	...
		24186629	O|O	**85125**	...		...	...

MONACO COACH (CONT'D)

LA PALMA (cont'd)

Year Ano Année	Model Modelo Modle	OEM #		Front			Rear	
				Fleetline	GasSLX		Fleetline	GasSLX
02-06	Models with W20 & W22 Workhorse Motorhome Chassis	F4BE5A832MO	O|O	85125	...		...	...
		F4BE5B492HO	O|O	85125	...		...	...
		F4BE5F324HO	O|O	85125	...		...	...
		F4-BE5-A832-MO	O|O	85125	...		...	...
		F4-BE5-B492-HO	O|O	85125	...		...	...
		F4-BE5-F324-HO	O|O	85125	...		...	...
		W0005662	O|O	85125	...		...	...
		W0006254	O|O	85125	...		...	...
02-06	MotorHomes with Ford F53 Chassis with 16,000 lb GVW to 22,000 lb GVW	1C34-18045-AA	O|O	83209	89414		...	...
		1C34-18045-JA	O|O	83209	89414		...	...
		1C3418045AA	O|O	83209	89414		...	...
		1C3418045JA	O|O	83209	89414		...	...
		9U9Z18124A	O|O	83209	89414		...	...
		9U9Z-18124-A	O|O	83209	89414		...	...
		9U94-18045-AA	O|O	83209	89414		...	...
		9U9418045AA	O|O	83209	89414		...	...
		ASH294	O|O	83209	89414		...	...
		ASH1022	O|O	83209	89414		...	...
		ASH1205	O|O	83209	89414		...	...
		ASH1228	O|O	83209	89414		...	...
		ASH1229	O|O	83209	89414		...	...
		ASH25822	O|O	83209	89414		...	...
		ASH25823	O|O	83209	89414		...	...
		ASH-294	O|O	83209	89414		...	...
		ASH-1022	O|O	83209	89414		...	...
		ASH-1205	O|O	83209	89414		...	...
		ASH-1228	O|O	83209	89414		...	...
		ASH-1229	O|O	83209	89414		...	...
		ASH-25822	O|O	83209	89414		...	...
		ASH-25823	O|O	83209	89414		...	...
		AT620	O|O	83209	89414		...	...
		AT766	O|O	83209	89414		...	...
		AT-620	O|O	83209	89414		...	...
		AT-766	O|O	83209	89414		...	...
04-06	Models with W20 & W22 Workhorse Motorhome Chassis	24-153256		...	...	–|–	85124	...
		F4-BE5-F325-HO		...	...	–|–	85124	...
		W0005663		...	...	–|–	85124	...
12-13	MotorHomes with Ford F53 Chassis with 16,000 lb GVW to 22,000 lb GVW	1C34-18045-AA	O|O	83209	89414		...	...
		1C34-18045-JA	O|O	83209	89414		...	...
		1C3418045AA	O|O	83209	89414		...	...
		1C3418045JA	O|O	83209	89414		...	...
		9U9Z18124A	O|O	83209	89414		...	...
		9U9Z18125A		...	...	O|O	83122	89406
		9U9Z-18124-A	O|O	83209	89414		...	...
		9U9Z-18125-A		...	...	O|O	83122	89406
		9U94-18045-AA	O|O	83209	89414		...	...
		9U94-18080-AA		...	...	O|O	83122	89406
		9U9418045AA	O|O	83209	89414		...	...
		9U9418080AA		...	...	O|O	83122	89406
		ASH137		...	...	O|O	83122	89406
		ASH294	O|O	83209	89414		...	...
		ASH1022	O|O	83209	89414		...	...
		ASH1023		...	...	O|O	83122	89406
		ASH1205	O|O	83209	89414		...	...

MONACO COACH (CONT'D)

LA PALMA (cont'd)

Year Ano Année	Model Modelo Modle	OEM #		Front			Rear	
				Fleetline	GasSLX		Fleetline	GasSLX
12-13	MotorHomes with Ford F53 Chassis with 16,000 lb GVW to 22,000 lb GVW	ASH1206		...	...	O|O	83122	89406
		ASH1228	O|O	83209	89414		...	...
		ASH1229	O|O	83209	89414		...	...
		ASH1230		...	...	O|O	83122	89406
		ASH25822	O|O	83209	89414		...	...
		ASH25823	O|O	83209	89414		...	...
		ASH25824		...	...	O|O	83122	89406
		ASH-137		...	...	O|O	83122	89406
		ASH-294	O|O	83209	89414		...	...
		ASH-1022	O|O	83209	89414		...	...
		ASH-1023		...	...	O|O	83122	89406
		ASH-1205	O|O	83209	89414		...	...
		ASH-1206		...	...	O|O	83122	89406
		ASH-1228	O|O	83209	89414		...	...
		ASH-1229	O|O	83209	89414		...	...
		ASH-1230		...	...	O|O	83122	89406
		ASH-25822	O|O	83209	89414		...	...
		ASH-25823	O|O	83209	89414		...	...
		ASH-25824		...	...	O|O	83122	89406
		AT620	O|O	83209	89414		...	...
		AT621		...	...	O|O	83122	89406
		AT766	O|O	83209	89414		...	...
		AT-620	O|O	83209	89414		...	...
		AT-621		...	...	O|O	83122	89406
		AT-766	O|O	83209	89414		...	...
2000	Models with W20 & W22 Workhorse Motorhome Chassis	24-153249	O|O	85125	...		...	...
		24-186629	O|O	85125	...		...	...
		24153249	O|O	85125	...		...	...
		24186629	O|O	85125	...		...	...
		F4BE5A832MO	O|O	85125	...		...	...
		F4BE5B492HO	O|O	85125	...		...	...
		F4BE5F324HO	O|O	85125	...		...	...
		F4-BE5-A832-MO	O|O	85125	...		...	...
		F4-BE5-B492-HO	O|O	85125	...		...	...
		F4-BE5-F324-HO	O|O	85125	...		...	...
		W0005662	O|O	85125	...		...	...
		W0006254	O|O	85125	...		...	...
2000	MotorHomes with Ford F53 Chassis with 16,000 lb GVW to 22,000 lb GVW	1C34-18045-AA	O|O	83209	89414		...	...
		1C34-18045-JA	O|O	83209	89414		...	...
		1C3418045AA	O|O	83209	89414		...	...
		1C3418045JA	O|O	83209	89414		...	...
		9U9Z18124A	O|O	83209	89414		...	...
		9U9Z18125A		...	...	O|O	83122	89406
		9U9Z-18124-A	O|O	83209	89414		...	...
		9U9Z-18125-A		...	...	O|O	83122	89406
		9U94-18045-AA	O|O	83209	89414		...	...
		9U94-18080-AA		...	...	O|O	83122	89406
		9U9418045AA	O|O	83209	89414		...	...
		9U9418080AA		...	...	O|O	83122	89406
		ASH137		...	...	O|O	83122	89406
		ASH294	O|O	83209	89414		...	...
		ASH1022	O|O	83209	89414		...	...
		ASH1023		...	...	O|O	83122	89406
		ASH1205	O|O	83209	89414		...	...

MONACO COACH (CONT'D)

LA PALMA (cont'd)

Year Ano Année	Model Modelo Modle	OEM #		Front			Rear	
				Fleetline	GasSLX		Fleetline	GasSLX
2000	MotorHomes with Ford F53 Chassis with 16,000 lb GVW to 22,000 lb GVW	ASH1206		...	...	O|O	83122	89406
		ASH1228	O|O	83209	89414		...	...
		ASH1229	O|O	83209	89414		...	...
		ASH1230		...	...	O|O	83122	89406
		ASH25822	O|O	83209	89414		...	...
		ASH25823	O|O	83209	89414		...	...
		ASH25824		...	...	O|O	83122	89406
		ASH-137		...	...	O|O	83122	89406
		ASH-294	O|O	83209	89414		...	...
		ASH-1022	O|O	83209	89414		...	...
		ASH-1023		...	...	O|O	83122	89406
		ASH-1205	O|O	83209	89414		...	...
		ASH-1206		...	...	O|O	83122	89406
		ASH-1228	O|O	83209	89414		...	...
		ASH-1229	O|O	83209	89414		...	...
		ASH-1230		...	...	O|O	83122	89406
		ASH-25822	O|O	83209	89414		...	...
		ASH-25823	O|O	83209	89414		...	...
		ASH-25824		...	...	O|O	83122	89406
		AT620	O|O	83209	89414		...	...
		AT621		...	...	O|O	83122	89406
		AT766	O|O	83209	89414		...	...
		AT-620	O|O	83209	89414		...	...
		AT-621		...	...	O|O	83122	89406
		AT-766	O|O	83209	89414		...	...
2006	MotorHomes with Ford F53 Chassis with 16,000 lb GVW to 22,000 lb GVW	9U9Z18125A		...	...	O|O	83122	89406
		9U9Z-18125-A		...	...	O|O	83122	89406
		9U94-18080-AA		...	...	O|O	83122	89406
		9U9418080AA		...	...	O|O	83122	89406
		ASH137		...	...	O|O	83122	89406
		ASH1023		...	...	O|O	83122	89406
		ASH1206		...	...	O|O	83122	89406
		ASH1230		...	...	O|O	83122	89406
		ASH25824		...	...	O|O	83122	89406
		ASH-137		...	...	O|O	83122	89406
		ASH-1023		...	...	O|O	83122	89406
		ASH-1206		...	...	O|O	83122	89406
		ASH-1230		...	...	O|O	83122	89406
		ASH-25824		...	...	O|O	83122	89406
		AT621		...	...	O|O	83122	89406
		AT-621		...	...	O|O	83122	89406
2009	Models with W20 & W22 Workhorse Motorhome Chassis	24-153249	O|O	85125	...		...	...
		24-153256		...	...	–|–	85124	...
		24-186629	O|O	85125	...		...	...
		24153249	O|O	85125	...		...	...
		24186629	O|O	85125	...		...	...
		F4BE5A832MO	O|O	85125	...		...	...
		F4BE5B492HO	O|O	85125	...		...	...
		F4BE5F324HO	O|O	85125	...		...	...
		F4-BE5-A832-MO	O|O	85125	...		...	...
		F4-BE5-B492-HO	O|O	85125	...		...	...
		F4-BE5-F324-HO	O|O	85125	...		...	...
		F4-BE5-F325-HO		...	...	–|–	85124	...
		W0005662	O|O	85125	...		...	...

Year Ano Année	Model Modelo Modle	OEM #		Front			Rear	
				Fleetline	GasSLX		Fleetline	GasSLX
MONACO COACH (CONT'D)								
LA PALMA (cont'd)								
2009	Models with W20 & W22 Workhorse Motorhome Chassis	W0005663		...	...		85124	...
		W0006254	O|O	85125	...		...	...
2009	MotorHomes with Ford F53 Chassis with 16,000 lb GVW to 22,000 lb GVW	1C34-18045-AA	O|O	83209	89414		...	...
		1C34-18045-JA	O|O	83209	89414		...	...
		1C3418045AA	O|O	83209	89414		...	...
		1C3418045JA	O|O	83209	89414		...	...
		9U9Z18124A	O|O	83209	89414		...	...
		9U9Z18125A		...	...	O|O	83122	89406
		9U9Z-18124-A	O|O	83209	89414		...	...
		9U9Z-18125-A		...	...	O|O	83122	89406
		9U94-18045-AA	O|O	83209	89414		...	...
		9U94-18080-AA		...	...	O|O	83122	89406
		9U9418045AA	O|O	83209	89414		...	...
		9U9418080AA		...	...	O|O	83122	89406
		ASH137		...	...	O|O	83122	89406
		ASH294	O|O	83209	89414		...	...
		ASH1022	O|O	83209	89414		...	...
		ASH1023		...	...	O|O	83122	89406
		ASH1205	O|O	83209	89414		...	...
		ASH1206		...	...	O|O	83122	89406
		ASH1228	O|O	83209	89414		...	...
		ASH1229	O|O	83209	89414		...	...
		ASH1230		...	...	O|O	83122	89406
		ASH25822	O|O	83209	89414		...	...
		ASH25823	O|O	83209	89414		...	...
		ASH25824		...	...	O|O	83122	89406
		ASH-137		...	...	O|O	83122	89406
		ASH-294	O|O	83209	89414		...	...
		ASH-1022	O|O	83209	89414		...	...
		ASH-1023		...	...	O|O	83122	89406
		ASH-1205	O|O	83209	89414		...	...
		ASH-1206		...	...	O|O	83122	89406
		ASH-1228	O|O	83209	89414		...	...
		ASH-1229	O|O	83209	89414		...	...
		ASH-1230		...	...	O|O	83122	89406
		ASH-25822	O|O	83209	89414		...	...
		ASH-25823	O|O	83209	89414		...	...
		ASH-25824		...	...	O|O	83122	89406
		AT620	O|O	83209	89414		...	...
		AT621		...	...	O|O	83122	89406
		AT766	O|O	83209	89414		...	...
		AT-620	O|O	83209	89414		...	...
		AT-621		...	...	O|O	83122	89406
		AT-766	O|O	83209	89414		...	...
MONARCH								
01-02	Models with W20 & W22 Workhorse Motorhome Chassis	24-153249	O|O	85125	...		...	...
		24-186629	O|O	85125	...		...	...
		24153249	O|O	85125	...		...	...
		24186629	O|O	85125	...		...	...
		F4BE5A832MO	O|O	85125	...		...	...
		F4BE5B492HO	O|O	85125	...		...	...
		F4BE5F324HO	O|O	85125	...		...	...
		F4-BE5-A832-MO	O|O	85125	...		...	...

MONACO COACH (CONT'D)

MONARCH (cont'd)

Year Ano Année	Model Modelo Modle	OEM #		Front			Rear	
				Fleetline	GasSLX		Fleetline	GasSLX
01-02	Models with W20 & W22 Workhorse Motorhome Chassis	F4-BE5-B492-HO	O|O	**85125**	...		...	...
		F4-BE5-F324-HO	O|O	**85125**	...		...	...
		W0005662	O|O	**85125**	...		...	...
		W0006254	O|O	**85125**	...		...	...
01-02	MotorHomes with Ford F53 Chassis with 16,000 lb GVW to 22,000 lb GVW	1C34-18045-AA	O|O	**83209**	**89414**		...	...
		1C34-18045-JA	O|O	**83209**	**89414**		...	...
		1C3418045AA	O|O	**83209**	**89414**		...	...
		1C3418045JA	O|O	**83209**	**89414**		...	...
		9U9Z18124A	O|O	**83209**	**89414**		...	...
		9U9Z18125A		...	...	O|O	**83122**	**89406**
		9U9Z-18124-A	O|O	**83209**	**89414**		...	...
		9U9Z-18125-A		...	...	O|O	**83122**	**89406**
		9U94-18045-AA	O|O	**83209**	**89414**		...	...
		9U94-18080-AA		...	...	O|O	**83122**	**89406**
		9U9418045AA	O|O	**83209**	**89414**		...	...
		9U9418080AA		...	...	O|O	**83122**	**89406**
		ASH137		...	...	O|O	**83122**	**89406**
		ASH294	O|O	**83209**	**89414**		...	...
		ASH1022	O|O	**83209**	**89414**		...	...
		ASH1023		...	...	O|O	**83122**	**89406**
		ASH1205	O|O	**83209**	**89414**		...	...
		ASH1206		...	...	O|O	**83122**	**89406**
		ASH1228	O|O	**83209**	**89414**		...	...
		ASH1229	O|O	**83209**	**89414**		...	...
		ASH1230		...	...	O|O	**83122**	**89406**
		ASH25822	O|O	**83209**	**89414**		...	...
		ASH25823	O|O	**83209**	**89414**		...	...
		ASH25824		...	...	O|O	**83122**	**89406**
		ASH-137		...	...	O|O	**83122**	**89406**
		ASH-294	O|O	**83209**	**89414**		...	...
		ASH-1022	O|O	**83209**	**89414**		...	...
		ASH-1023		...	...	O|O	**83122**	**89406**
		ASH-1205	O|O	**83209**	**89414**		...	...
		ASH-1206		...	...	O|O	**83122**	**89406**
		ASH-1228	O|O	**83209**	**89414**		...	...
		ASH-1229	O|O	**83209**	**89414**		...	...
		ASH-1230		...	...	O|O	**83122**	**89406**
		ASH-25822	O|O	**83209**	**89414**		...	...
		ASH-25823	O|O	**83209**	**89414**		...	...
		ASH-25824		...	...	O|O	**83122**	**89406**
		AT620	O|O	**83209**	**89414**		...	...
		AT621		...	...	O|O	**83122**	**89406**
		AT766	O|O	**83209**	**89414**		...	...
		AT-620	O|O	**83209**	**89414**		...	...
		AT-621		...	...	O|O	**83122**	**89406**
		AT-766	O|O	**83209**	**89414**		...	...
06-11	Models with W20 & W22 Workhorse Motorhome Chassis	24-153249	O|O	**85125**	...		...	...
		24-153256		...	...	–|–	**85124**	...
		24-186629	O|O	**85125**	...		...	...
		24153249	O|O	**85125**	...		...	...
		24186629	O|O	**85125**	...		...	...
		F4BE5A832MO	O|O	**85125**	...		...	...
		F4BE5B492HO	O|O	**85125**	...		...	...
		F4BE5F324HO	O|O	**85125**	...		...	...

MONACO COACH (CONT'D)

MONARCH (cont'd)

Year Ano Année	Model Modelo Modle	OEM #	Front Fleetline	Front GasSLX	Rear Fleetline	Rear GasSLX
06-11	Models with W20 & W22 Workhorse Motorhome Chassis	F4-BE5-A832-MO	85125	...	...	...
		F4-BE5-B492-HO	85125	...	...	...
		F4-BE5-F324-HO	85125	...	...	...
		F4-BE5-F325-HO	...	...	85124	...
		W0005662	85125	...	...	...
		W0005663	...	...	85124	...
		W0006254	85125	...	...	...
06-14	MotorHomes with Ford F53 Chassis with 16,000 lb GVW to 22,000 lb GVW	1C34-18045-AA	83209	89414	...	...
		1C34-18045-JA	83209	89414	...	...
		1C3418045AA	83209	89414	...	...
		1C3418045JA	83209	89414	...	...
		9U9Z18124A	83209	89414	...	...
		9U9Z18125A	...	...	83122	89406
		9U9Z-18124-A	83209	89414	...	...
		9U9Z-18125-A	...	...	83122	89406
		9U94-18045-AA	83209	89414	...	...
		9U94-18080-AA	...	...	83122	89406
		9U9418045AA	83209	89414	...	...
		9U9418080AA	...	...	83122	89406
		ASH137	...	...	83122	89406
		ASH294	83209	89414	...	...
		ASH1022	83209	89414	...	...
		ASH1023	...	...	83122	89406
		ASH1205	83209	89414	...	...
		ASH1206	...	...	83122	89406
		ASH1228	83209	89414	...	...
		ASH1229	83209	89414	...	...
		ASH1230	...	...	83122	89406
		ASH25822	83209	89414	...	...
		ASH25823	83209	89414	...	...
		ASH25824	...	...	83122	89406
		ASH-137	...	...	83122	89406
		ASH-294	83209	89414	...	...
		ASH-1022	83209	89414	...	...
		ASH-1023	...	...	83122	89406
		ASH-1205	83209	89414	...	...
		ASH-1206	...	...	83122	89406
		ASH-1228	83209	89414	...	...
		ASH-1229	83209	89414	...	...
		ASH-1230	...	...	83122	89406
		ASH-25822	83209	89414	...	...
		ASH-25823	83209	89414	...	...
		ASH-25824	...	...	83122	89406
		AT620	83209	89414	...	...
		AT621	...	...	83122	89406
		AT766	83209	89414	...	...
		AT-620	83209	89414	...	...
		AT-621	...	...	83122	89406
		AT-766	83209	89414	...	...

MOR-RYDE SUSPENSION

	Bus Suspension	.....	...	...	83103	...

Year Ano Année	Model Modelo Modle	OEM #		Front			Rear	
				Fleetline	GasSLX		Fleetline	GasSLX
MOR-RYDE SUSPENSION (CONT'D)								
	Bus Suspension	U0109-006		...	...	o|o	G63866	...
		U0109006		...	...	o|o	G63866	...
	Recreational Vehicle	U0109-014		...	...	–|–	83400	...
		U0109-018		...	...	o|o	G63866	...
		U0109014		...	...	–|–	83400	...
		U0109018		...	...	o|o	G63866	...
	Trailer Rear	U0109-007		...	...	o|o	G63183	...
		U0109007		...	...	o|o	G63183	...
MOTOR COACH INDUSTRIES								
D4005								
05-09	(Drive Axle)	12-05-1177		...	...		85729	...
		12-05-1261		...	...		85729	...
		12-05-1328		...	...		85729	...
		12051177		...	...		85729	...
		12051261		...	...		85729	...
		12051328		...	...		85729	...
05-09	(Front Axle)	12-05-1176	–|–	85728	...		...	...
		12-05-1260	–|–	85728	...		...	...
		12-05-1327	–|–	85728	...		...	...
		12L597	–|–	85728	...		...	...
		12L-5-97	–|–	85728	...		...	...
		12051176	–|–	85728	...		...	...
		12051260	–|–	85728	...		...	...
		12051327	–|–	85728	...		...	...
05-09	Models with O.E.M. Number (Trailing Axle)	12-05-1194		...	...	o|o	85339	...
		12L599		...	...	o|o	85339	...
		12L-5-99		...	...	o|o	85339	...
		90-2587		...	...	o|o	85339	...
		12051194		...	...	o|o	85339	...
13-15	Models with O.E.M. Number (Trailing Axle)	12-05-1194		...	...	o|o	85339	...
		12L599		...	...	o|o	85339	...
		12L-5-99		...	...	o|o	85339	...
		90-2587		...	...	o|o	85339	...
		12051194		...	...	o|o	85339	...
2011	Models with O.E.M. Number (Trailing Axle)	12-05-1194		...	...	o|o	85339	...
		12L599		...	...	o|o	85339	...
		12L-5-99		...	...	o|o	85339	...
		90-2587		...	...	o|o	85339	...
		12051194		...	...	o|o	85339	...
D4505								
06-09	(Drive Axle)	12-05-1177		...	...		85729	...
		12-05-1328		...	...		85729	...
		12L588		...	...		85729	...
		12L-5-88		...	...		85729	...
		12051177		...	...		85729	...
		12051328		...	...		85729	...
06-09	(Front Axle)	12-05-1176	–|–	85728	...		...	...
		12-05-1327	–|–	85728	...		...	...
		12L567	–|–	85728	...		...	...
		12L-5-67	–|–	85728	...		...	...
		12051176	–|–	85728	...		...	...
		12051327	–|–	85728	...		...	...
06-09	(Trailing Axle)	12-05-1179		...	...	–|–	85727	...

Year Ano Année	Model Modelo Modle	OEM #		Front			Rear	
				Fleetline	GasSLX		Fleetline	GasSLX
MOTOR COACH INDUSTRIES (CONT'D)								
D4505 (cont'd)								
06-09	(Trailing Axle)	12-05-1262		...	...	−|−	85727	...
		12-05-1264		...	...	−|−	85727	...
		12-05-1329		...	...	−|−	85727	...
		12L5114		...	...	−|−	85727	...
		12L-5-114		...	...	−|−	85727	...
		12051179		...	...	−|−	85727	...
		12051262		...	...	−|−	85727	...
		12051264		...	...	−|−	85727	...
		12051329		...	...	−|−	85727	...
J4500								
01-03	(Drive Axle)	12-05-1022		...	...		85970	...
		12-05-1138		...	...		85970	...
		12-05-1148		...	...		85970	...
		12-05-1188		...	...		85970	...
		12051022		...	...		85970	...
		12051138		...	...		85970	...
		12051148		...	...		85970	...
		12051188		...	...		85970	...
01-03	Front Axle with OEM Number	12-05-1150	−|○	85711	...		...	...
		12-05-1165	−|○	85711	...		...	...
		12-05-1228	−|○	85711	...		...	...
		12051150	−|○	85711	...		...	...
		12051165	−|○	85711	...		...	...
		12051228	−|○	85711	...		...	...
01-03	Models with O.E.M. Number (Trailing Axle)	12-05-1139		...	...		85341	...
		12-05-1147		...	...		85341	...
		12-05-1166		...	...		85341	...
		12051139		...	...		85341	...
		12051147		...	...		85341	...
		12051166		...	...		85341	...
09-19	(Drive Axle)	12-05-1022		...	...		85970	...
		12-05-1138		...	...		85970	...
		12-05-1148		...	...		85970	...
		12-05-1188		...	...		85970	...
		12051022		...	...		85970	...
		12051138		...	...		85970	...
		12051148		...	...		85970	...
		12051188		...	...		85970	...
09-19	Front Axle with OEM Number	12-05-1150	−|○	85711	...		...	...
		12-05-1165	−|○	85711	...		...	...
		12-05-1228	−|○	85711	...		...	...
		12051150	−|○	85711	...		...	...
		12051165	−|○	85711	...		...	...
		12051228	−|○	85711	...		...	...
09-19	Models with O.E.M. Number (Trailing Axle)	12-05-1139		...	...		85341	...
		12-05-1147		...	...		85341	...
		12-05-1166		...	...		85341	...
		12051139		...	...		85341	...
		12051147		...	...		85341	...
		12051166		...	...		85341	...
2007	(Drive Axle)	12-05-1022		...	...		85970	...
		12-05-1138		...	...		85970	...
		12-05-1148		...	...		85970	...

Year Ano Année	Model Modelo Modle	OEM #		Front			Rear	
				Fleetline	GasSLX		Fleetline	GasSLX
MOTOR COACH INDUSTRIES (CONT'D)								
J4500 (cont'd)								
2007	(Drive Axle)	12-05-1188		...	...		**85970**	...
		12051022		...	...		**85970**	...
		12051138		...	...		**85970**	...
		12051148		...	...		**85970**	...
		12051188		...	...		**85970**	...
2007	Front Axle with OEM Number	12-05-1150	−|O	**85711**	...		...	...
		12-05-1165	−|O	**85711**	...		...	...
		12-05-1228	−|O	**85711**	...		...	...
		12051150	−|O	**85711**	...		...	...
		12051165	−|O	**85711**	...		...	...
		12051228	−|O	**85711**	...		...	...
2007	Models with O.E.M. Number (Trailing Axle)	12-05-1139		...	...		**85341**	...
		12-05-1147		...	...		**85341**	...
		12-05-1166		...	...		**85341**	...
		12051139		...	...		**85341**	...
		12051147		...	...		**85341**	...
		12051166		...	...		**85341**	...
ADDITIONAL APPLICATIONS								
	Drive Axle	12J52		...	...		**85312**	...
		12J54		...	...		**85312**	...
		12J-5-2		...	...		**85312**	...
		12J-5-4		...	...		**85312**	...
		12L571		...	...	−|−	**85708**	...
		12L-5-71		...	...	−|−	**85708**	...
		T14-1081		...	...		**85729**	...
		T141081		...	...		**85729**	...
	Low Floor Bus Models with O.E.M. Number	12L599		...	...	O|O	**85339**	...
		12L-5-99		...	...	O|O	**85339**	...
	MC5, MC7, MC8	680323	O|O	**85700**	...		...	...
		3178157	O|O	**85700**	...		...	...
	RTS Bus with "V" Drive Rear	G1101590GS		...	...	O|O	**85713**	...
	RTS Bus with Regular Rear	G1011822		...	...	O|O	**85702**	...
	Steering - Tag Axle	12L4170		...	...	O|O	**83158**	...
		12L-4-170		...	...	O|O	**83158**	...
		654789		...	...	O|O	**83158**	...
	Tag Axle	12-05-6068		...	...	−|−	**85727**	...
		12056068		...	...	−|−	**85727**	...
		T14-1082		...	...	−|−	**85727**	...
		T141082		...	...	−|−	**85727**	...
D - SERIES COACHES								
01-04	D 4005 Coach	12-05-1176	−|−	**85728**	...		...	...
		12-05-1177		...	...		**85729**	...
		12-05-1194		...	...	O|O	**85339**	...
		12-05-1260	−|−	**85728**	...		...	...
		12-05-1261		...	...		**85729**	...
		12-05-1327	−|−	**85728**	...		...	...
		12-05-1328		...	...		**85729**	...
		12L597	−|−	**85728**	...		...	...
		12L599		...	...	O|O	**85339**	...
		12L-5-97	−|−	**85728**	...		...	...
		12L-5-99		...	...	O|O	**85339**	...
		90-2587		...	...	O|O	**85339**	...

MOTOR COACH INDUSTRIES (CONT'D)

D - SERIES COACHES (cont'd)

Year Ano Année	Model Modelo Modle	OEM #	Front Fleetline	Front GasSLX	Rear Fleetline	Rear GasSLX
01-04	D 4005 Coach	12051176	**85728**	...	...	...
		12051177	...	...	**85729**	...
		12051194	...	...	**85339**	...
		12051260	**85728**	...	...	...
		12051261	...	...	**85729**	...
		12051327	**85728**	...	...	...
		12051328	...	...	**85729**	...
01-05	D 4505 Coach	12-05-1176	**85728**	...	...	...
		12-05-1177	...	...	**85729**	...
		12-05-1179	...	...	**85727**	...
		12-05-1262	...	...	**85727**	...
		12-05-1264	...	...	**85727**	...
		12-05-1327	**85728**	...	...	...
		12-05-1328	...	...	**85729**	...
		12-05-1329	...	...	**85727**	...
		12L567	**85728**	...	...	...
		12L588	...	...	**85729**	...
		12L5114	...	...	**85727**	...
		12L-5-67	**85728**	...	...	...
		12L-5-88	...	...	**85729**	...
		12L-5-114	...	...	**85727**	...
		12051176	**85728**	...	...	...
		12051177	...	...	**85729**	...
		12051179	...	...	**85727**	...
		12051262	...	...	**85727**	...
		12051264	...	...	**85727**	...
		12051327	**85728**	...	...	...
		12051328	...	...	**85729**	...
		12051329	...	...	**85727**	...
01-09	D 4000 Coach	12-05-1176	**85728**	...	...	...
		12-05-1177	...	...	**85729**	...
		12-05-1260	**85728**	...	...	...
		12-05-1261	...	...	**85729**	...
		12-05-1327	**85728**	...	...	...
		12-05-1328	...	...	**85729**	...
		12L597	**85728**	...	...	...
		12L-5-97	**85728**	...	...	...
		12051176	**85728**	...	...	...
		12051177	...	...	**85729**	...
		12051260	**85728**	...	...	...
		12051261	...	...	**85729**	...
		12051327	**85728**	...	...	...
		12051328	...	...	**85729**	...
01-09	D 4500 Coach	12-05-1176	**85728**	...	...	...
		12-05-1177	...	...	**85729**	...
		12-05-1179	...	...	**85727**	...
		12-05-1262	...	...	**85727**	...
		12-05-1264	...	...	**85727**	...
		12-05-1327	**85728**	...	...	...
		12-05-1328	...	...	**85729**	...
		12-05-1329	...	...	**85727**	...
		12L567	**85728**	...	...	...
		12L588	...	...	**85729**	...
		12L5114	...	...	**85727**	...

MOTOR COACH INDUSTRIES (CONT'D)

D - SERIES COACHES (cont'd)

Year Ano Année	Model Modelo Modle	OEM #		Front			Rear	
				Fleetline	GasSLX		Fleetline	GasSLX
01-09	D 4500 Coach	12L-5-67	−|−	**85728**	...		...	...
		12L-5-88		...	...		**85729**	...
		12L-5-114		...	...	−|−	**85727**	...
		85729		...	...		**85729**	...
		12051176	−|−	**85728**	...		...	...
		12051177		...	...		**85729**	...
		12051179		...	...	−|−	**85727**	...
		12051262		...	...	−|−	**85727**	...
		12051264		...	...	−|−	**85727**	...
		12051327	−|−	**85728**	...		...	...
		12051328		...	...		**85729**	...
		12051329		...	...	−|−	**85727**	...
01-09	DL3 Bus	12-05-1327	−|−	**85728**	...		...	...
		12-05-1328		...	...		**85729**	...
		12L588		...	...		**85729**	...
		12L589		...	...		**85729**	...
		12L596	−|−	**85728**	...		...	...
		12L597	−|−	**85728**	...		...	...
		12L-5-88		...	...		**85729**	...
		12L-5-89		...	...		**85729**	...
		12L-5-96	−|−	**85728**	...		...	...
		12L-5-97	−|−	**85728**	...		...	...
		12051327	−|−	**85728**	...		...	...
		12051328		...	...		**85729**	...
01-09	DL3 Bus -Drive Axle	12J510		...	...		**85733**	...
		12J-5-10		...	...		**85733**	...
01-09	DL3 Bus -Tag Axle	01-205219		...	...	−|−	**85727**	...
		12-05-1262		...	...	−|−	**85727**	...
		12-05-1264		...	...	−|−	**85727**	...
		12-05-1329		...	...	−|−	**85727**	...
		12L5100		...	...	−|−	**85727**	...
		12L5114		...	...	−|−	**85727**	...
		12L-5-100		...	...	−|−	**85727**	...
		12L-5-114		...	...	−|−	**85727**	...
		01205219		...	...	−|−	**85727**	...
		12051262		...	...	−|−	**85727**	...
		12051264		...	...	−|−	**85727**	...
		12051329		...	...	−|−	**85727**	...
		T12-1208		...	...	−|−	**85727**	...
		T121208		...	...	−|−	**85727**	...
01-15	D 4000 Coach	12-05-1178		...	...	O|O	**85339**	...
		12-05-1194		...	...	O|O	**85339**	...
		12L599		...	...	O|O	**85339**	...
		12L-5-99		...	...	O|O	**85339**	...
		90-2587		...	...	O|O	**85339**	...
		12051178		...	...	O|O	**85339**	...
		12051194		...	...	O|O	**85339**	...
2010	D 4005 Coach	12-05-1194		...	...	O|O	**85339**	...
		12L599		...	...	O|O	**85339**	...
		12L-5-99		...	...	O|O	**85339**	...
		90-2587		...	...	O|O	**85339**	...
		12051194		...	...	O|O	**85339**	...
2012	D 4005 Coach	12-05-1194		...	...	O|O	**85339**	...
		12L599		...	...	O|O	**85339**	...

Year Ano Année	Model Modelo Modle	OEM #		Front			Rear	
				Fleetline	GasSLX		Fleetline	GasSLX
MOTOR COACH INDUSTRIES (CONT'D)								
D - SERIES COACHES (cont'd)								
2012	D 4005 Coach	12L-5-99		...	...	○|○	**85339**	...
		90-2587		...	...	○|○	**85339**	...
		12051194		...	...	○|○	**85339**	...
E - SERIES COACHES								
01-09	E 4500 Coach	12-05-1022		...	...		**85970**	...
		12-05-1102		...	...		**85970**	...
		12-05-1138		...	...		**85970**	...
		12-05-1139		...	...		**85341**	...
		12-05-1147		...	...		**85341**	...
		12-05-1148		...	...		**85970**	...
		12-05-1150	−|○	**85711**	...		...	...
		12-05-1165	−|○	**85711**	...		...	...
		12-05-1166		...	...		**85341**	...
		12-05-1188		...	...		**85970**	...
		12051022		...	...		**85970**	...
		12051102		...	...		**85970**	...
		12051138		...	...		**85970**	...
		12051139		...	...		**85341**	...
		12051147		...	...		**85341**	...
		12051148		...	...		**85970**	...
		12051150	−|○	**85711**	...		...	...
		12051165	−|○	**85711**	...		...	...
		12051166		...	...		**85341**	...
		12051188		...	...		**85970**	...
G - SERIES COACHES								
01-03	G 4500 Coach	12-05-6000	−|○	**85711**	...		...	...
		12-05-6001		...	...		**85740**	...
		12-05-6002		...	...	○|○	**85339**	...
		12-05-6033		...	...	○|○	**85339**	...
		12-05-6053	−|○	**85711**	...		...	...
		12-05-6054		...	...		**85740**	...
		12-05-6055		...	...	○|○	**85339**	...
		1497835	−|○	**85711**	...		...	...
		1498565		...	...	○|○	**85339**	...
		12056000	−|○	**85711**	...		...	...
		12056001		...	...		**85740**	...
		12056002		...	...	○|○	**85339**	...
		12056033		...	...	○|○	**85339**	...
		12056053	−|○	**85711**	...		...	...
		12056054		...	...		**85740**	...
		12056055		...	...	○|○	**85339**	...
J4500								
04-06	...	12-05-1022		...	...		**85970**	...
		12-05-1138		...	...		**85970**	...
		12-05-1148		...	...		**85970**	...
		12-05-1188		...	...		**85970**	...
		12051022		...	...		**85970**	...
		12051138		...	...		**85970**	...
		12051148		...	...		**85970**	...
		12051188		...	...		**85970**	...
2008	...	12-05-1022		...	...		**85970**	...

Year Ano Année	Model Modelo Modle	OEM #		Front			Rear	
				Fleetline	GasSLX		Fleetline	GasSLX

MOTOR COACH INDUSTRIES (CONT'D)

J4500 (cont'd)

2008	...	12-05-1138		...	...		85970	...
		12-05-1148		...	...		85970	...
		12-05-1188		...	...		85970	...
		12051022		...	...		85970	...
		12051138		...	...		85970	...
		12051148		...	...		85970	...
		12051188		...	...		85970	...

J - SERIES COACHES

04-06	J 4500 Coach	12-05-1139		...	...		85341	...
		12-05-1147		...	...		85341	...
		12-05-1150	−|O	85711	...		...	...
		12-05-1165	−|O	85711	...		...	...
		12-05-1166		...	...		85341	...
		12-05-1228	−|O	85711	...		...	...
		12051139		...	...		85341	...
		12051147		...	...		85341	...
		12051150	−|O	85711	...		...	...
		12051165	−|O	85711	...		...	...
		12051166		...	...		85341	...
		12051228	−|O	85711	...		...	...
2008	J 4500 Coach	12-05-1139		...	...		85341	...
		12-05-1147		...	...		85341	...
		12-05-1150	−|O	85711	...		...	...
		12-05-1165	−|O	85711	...		...	...
		12-05-1166		...	...		85341	...
		12-05-1228	−|O	85711	...		...	...
		12051139		...	...		85341	...
		12051147		...	...		85341	...
		12051150	−|O	85711	...		...	...
		12051165	−|O	85711	...		...	...
		12051166		...	...		85341	...
		12051228	−|O	85711	...		...	...
	J 4500 Coach	12-05-1137		85340	...		...	...
		12-05-1142		85340	...		...	...
		12-05-1146		85340	...		...	...
		12051137		85340	...		...	...
		12051142		85340	...		...	...
		12051146		85340	...		...	...
	Additional O.E.M. Interchanges	12G51	O|O	85700	...		...	...
		12G-5-1	O|O	85700	...		...	...
		12J57		85312				
		12J59		...	...	O|O	85700	...
		12J571		85733				
		12J-5-7		85312				
		12J-5-9		...	...	O|O	85700	...
		12J-5-71		85733				
		12L570	O|O	85700	...		...	...
		12L572	−|−	85709				
		12L-5-70	O|O	85700	...		...	...
		12L-5-72	−|−	85709				
		97-2201-00151	O|O	85700				
		97-2210-00164	−|−	85708				
		97-9999-02514	O|O	85700				

MOTOR COACH INDUSTRIES (CONT'D)

Year Ano Année	Model Modelo Modle	OEM #		Front			Rear	
				Fleetline	GasSLX		Fleetline	GasSLX
	Additional O.E.M. Interchanges	97-9999-02634			85733			
		680333	−|−		85708			
		690029	o|o		85700			
		6314933	−|−		85708			
		22052014		...	...	o|o	85702	...
		97220100151	o|o		85700			
		97221000164	−|−		85708			
		97999902514	o|o		85700			
		97999902634			85733			
	Models with O.E.M. Number	12-5-1-G	o|o	85700	...		...	...
		12-5-1-GS	o|o	85700	...		...	...
		12-05-1021		85340	...		...	...
		12-05-1023		...	...		85341	...
		12-05-1101		85340	...		...	...
		12-05-1103		...	...		85341	...
		12-05-1170		85340	...		...	...
		12-05-1199		...	...		85729	...
		12-05-1242	−|−	85728	...		...	...
		12-05-1243		...	...		85729	...
		12-05-1244		...	...	−|−	85727	...
		12B51G	o|o	85700	...		...	...
		12B51GS	o|o	85700	...		...	...
		12B-5-1-G	o|o	85700	...		...	...
		12B-5-1-GS	o|o	85700	...		...	...
		12J510GS		...	...		85733	...
		12J-5-10GS		...	...		85733	...
		12L558	−|−	85728	...		...	...
		12L569	o|o	85700	...		...	...
		12L598		...	...	o|o	85339	...
		12L-5-58	−|−	85728	...		...	...
		12L-5-69	o|o	85700	...		...	...
		12L-5-98		...	...	o|o	85339	...
		12T113	o|o	85303	89422		...	...
		12T-1-13	o|o	85303	89422		...	...
		12TA01013	o|o	85303	89422		...	...
		12TA-01-013	o|o	85303	89422		...	...
		63-0127GS	o|o	85303	89422		...	...
		97-9999-02585		85723	...		...	...
		1251G	o|o	85700	...		...	...
		1251GS	o|o	85700	...		...	...
		630127GS	o|o	85303	89422		...	...
		680232		...	...		85733	...
		680322		...	...	o|o	85704	...
		680323	o|o	85700	...		...	...
		680369		...	...	−|−	85708	...
		680374	−|−	85728	...		...	...
		680441		...	...		85729	...
		680452		...	...	o|o	85339	...
		680462	−|−	85728	...		...	...
		680470		...	...	o|o	85713	...
		680482		...	...	−|−	85727	...
		680485		...	...		85733	...
		680544	−|o	85711	...		...	...
		680546		...	...	o|o	85339	...
		680602		...	...	o|o	85339	...

APPLICATION GUIDE - TRUCKS, TRAILERS AND BUSES

Year Ano Année	Model Modelo Modle	OEM #		Front			Rear	
				Fleetline	GasSLX		Fleetline	GasSLX
MOTOR COACH INDUSTRIES (CONT'D)								
	Models with O.E.M. Number	680677	−|−	**85728**	...		...	...
		680680		...	...		**85729**	...
		680681		...	...	−|−	**85727**	...
		695125		...	...	o|o	**85704**	...
		1498200		...	...		**85740**	...
		12051021		**85340**	...		...	...
		12051023		...	...		**85341**	...
		12051101		**85340**	...		...	...
		12051103		...	...		**85341**	...
		12051170		**85340**	...		...	...
		12051199		...	...		**85729**	...
		12051242	−|−	**85728**	...		...	...
		12051243		...	...		**85729**	...
		12051244		...	...	−|−	**85727**	...
		22012067	o|o	**85700**	...		...	...
		22024061		...	...	o|o	**85704**	...
		22045526		...	...	o|o	**85702**	...
		97999902585		**85723**	...		...	...
		G1101590		...	...	o|o	**85713**	...
		G1201339		...	...	o|o	**85702**	...
		G5008069	o|o	**85700**	...		...	...
		OE10086S		...	...	o|o	**85702**	...
		OE10881	−|o	**85711**	...		...	...
		OE10882		...	...		**85740**	...
		OE10883		...	...	o|o	**85339**	...
		T14-1045GS	o|o	**85700**	...		...	...
		T14-1048		...	...	o|o	**85302**	**89420**
		T14-1080	−|−	**85728**	...		...	...
		T141045GS	o|o	**85700**	...		...	...
		T141048		...	...	o|o	**85302**	**89420**
		T141080	−|−	**85728**	...		...	...
MUNCIE RECLAMATION								
	Additional O.E.M. Interchanges	97-2210-00164	−|−	**85708**				
		665569		...	...	o|o	**85045**	...
		680334	−|−	**85709**				
		97221000164	−|−	**85708**				
		H53-21144-004		...	...	o|o	**85045**	...
		H5321144004		...	...	o|o	**85045**	...
		MR1623	o|o	**85700**				
		MR1710		...	...	o|o	**85713**	...
		MR1751		...	...	o|o	**85713**	...
		MR1763	o|o	**85300 or 89419**				
		MR1765		...	...	o|o	**85713**	...
		MR2960	o|o	**85702**				
		MR2996		...	...	o|o	**85704**	...
		MR3303	−|−	**85709**				
		MR3304H	−|−	**85709**				
		MR3306	−|−	**85705**	**89447**		...	...
		MR6535	−|−	**85708**				
		MR6536		...	...	−|−	**85722**	...
		MR25767	o|o	**85702**				
	Models with O.E.M. Number	665459		...	...	−|−	**89447**	...
		665568		...	...	o|o	**85051**	...
		H53-20415-006		...	...	o|o	**85051**	...
		H5320415006		...	...	o|o	**85051**	...

APPLICATION GUIDE - TRUCKS, TRAILERS AND BUSES

Year Ano Année	Model Modelo Modle	OEM #		Front			Rear	
				Fleetline	GasSLX		Fleetline	GasSLX
MUNCIE RECLAMATION (CONT'D)								
	Models with O.E.M. Number	MR6394		85723	...		...	...
NATIONAL COACH CORP								
	Eldorado Coach RE-29	C800853	O|O	83207	89407		...	...
NATIONAL RV INC.								
CLASS A MOTORHOMES								
01-08	Models with Workhorse W20 , W22, & W24 MotorHome Chassis with O.E.M. Number	24153249	O|O	85125	...		...	...
04-08	Models with Workhorse W20 , W22, & W24 MotorHome Chassis with O.E.M. Number	24-153256		...	...	–|–	85124	...
		24153256		...	...	–|–	85124	...
		F4BE5F325HO		...	...	–|–	85124	...
		F4-BE5-F325-HO		...	...	–|–	85124	...
		W0005663		...	...	–|–	85124	...
98-08	Models with Workhorse W20 , W22, & W24 MotorHome Chassis with O.E.M. Number	24-153249	O|O	85125	...		...	...
		24-186629	O|O	85125	...		...	...
		24186629	O|O	85125	...		...	...
		F4BE5A832MO	O|O	85125	...		...	...
		F4BE5B492HO	O|O	85125	...		...	...
		F4BE5F324HO	O|O	85125	...		...	...
		F4-BE5-A832-MO	O|O	85125	...		...	...
		F4-BE5-B492-HO	O|O	85125	...		...	...
		F4-BE5-F324-HO	O|O	85125	...		...	...
		W0005662	O|O	85125	...		...	...
		W0006254	O|O	85125	...		...	...
99-08	Models with Ford F53 Chassis with 16,000 lb GVW to 22,000 lb GVW	1C34-18045-AA	O|O	83209	89414		...	...
		1C34-18045-JA	O|O	83209	89414		...	...
		9U9Z18125A		...	...	O|O	83122	89406
		9U9Z-18124-A	O|O	83209	89414		...	...
		9U9Z-18125-A		...	...	O|O	83122	89406
		9U94-18045-AA	O|O	83209	89414		...	...
		9U94-18080-AA		...	...	O|O	83122	89406
		9U9418080AA		...	...	O|O	83122	89406
		ASH137		...	...	O|O	83122	89406
		ASH1023		...	...	O|O	83122	89406
		ASH1206		...	...	O|O	83122	89406
		ASH1230		...	...	O|O	83122	89406
		ASH25824		...	...	O|O	83122	89406
		ASH-137		...	...	O|O	83122	89406
		ASH-294	O|O	83209	89414		...	...
		ASH-1022	O|O	83209	89414		...	...
		ASH-1023		...	...	O|O	83122	89406
		ASH-1205	O|O	83209	89414		...	...
		ASH-1206		...	...	O|O	83122	89406
		ASH-1228	O|O	83209	89414		...	...
		ASH-1229	O|O	83209	89414		...	...
		ASH-1230		...	...	O|O	83122	89406
		ASH-25822	O|O	83209	89414		...	...
		ASH-25823	O|O	83209	89414		...	...
		ASH-25824		...	...	O|O	83122	89406
		AT621		...	...	O|O	83122	89406
		AT-620	O|O	83209	89414		...	...
		AT-621		...	...	O|O	83122	89406
		AT-766	O|O	83209	89414		...	...

APPLICATION GUIDE - TRUCKS, TRAILERS AND BUSES

Year Ano Année	Model Modelo Modle	OEM #		Front			Rear	
				Fleetline	GasSLX		Fleetline	GasSLX
NEOPLAN BUS								
	Additional O.E.M. Interchanges	CI 1002003	−|−	**85705**	89447		...	...
	Mini-Bus	24-1700-106-149		...	...	○|○	**83216**	...
		24-1700-999-362	−|○	**85009**	...		...	...
		241700106149		...	...	○|○	**83216**	...
		241700999362	−|○	**85009**	...		...	...
		BN1002002	−|○	**85009**	...		...	...
		BT1002011		...	...	○|○	**83216**	...
	Model 40	25-1700-101-426	−|−	**85705**	89447		...	...
		251700101426	−|−	**85705**	89447		...	...
	Model 80B	CL1002003	−|−	**85705**	89447		...	...
		DZ1002002	−|−	**85705**	89447		...	...
	Models with O.E.M. Number	680307	−|−	**85705**	89447		...	...
		AA1002002	−|−	**85705**	89447		...	...
		AA1002003	−|−	**85705**	89447		...	...
		AA1802002	−|−	**85705**	89447		...	...
		AC1002002	−|−	**85705**	89447		...	...
		AC1002002GS	−|−	**85705**	89447		...	...
		AC1002003	−|−	**85705**	89447		...	...
		DT1802002	−|−	**85705**	89447		...	...
		GJ1002003	−|−	**85705**	89447		...	...
		MM1002002	−|−	**85705**	89447		...	...
		MM1002003	−|−	**85705**	89447		...	...
NEW FLYER								
02-21	Transit Buses (Low Profile) with O.E.M. Number	152959		...	...	−|−	**85708**	...
		680671		...	...	−|−	**85708**	...
91-21	Transit Buses (Low Profile) with O.E.M. Number	009863	−|−	**85722**	...		...	...
		016415	−|−	**85722**	...		...	...
		680346	−|−	**85722**	...		...	...
	Additional O.E.M. Interchanges	97-2210-00164	−|−	**85708**				
		015915	−|○	**85711**				
		064845	−|○	**85711**				
		680352	−|○	**85711**				
		690102	−|○	**85711**				
		68027440Y		...	...	○|○	**85716**	...
		68037840B	○|○	**85720**	...		...	...
		68050440X		...	...	○|○	**85716**	...
		68050640Y	○|○	**85732**	...		...	...
		69536640Y	○|○	**85732**	...		...	...
		97221000164	−|−	**85708**				
	Diesel Low Floor Coach	015813		...	...	−|−	**85708**	...
	Models with O.E.M. Number	69536140Y	−|○	**87016**	...		...	...
NEWMAR CORP								
CLASS A MOTORHOMES								
02-04	Dutch Star & Moundain Aire Series MotorHomes with Freightliner XC Chassis	16-16736-000		...	...	○|○	**85029**	...
		16-16737-000	○|○	**83160**	...		...	...
		16-16874-000	○|○	**83160**	...		...	...
		16-18103-000	−|−	**85900**	...		...	...
		1616736000		...	...	○|○	**85029**	...
		1616737000	○|○	**83160**	...		...	...
		1616874000	○|○	**83160**	...		...	...
		1618103000	−|−	**85900**	...		...	...
		141700131809		...	...	○|○	**85029**	...
		141700131810	○|○	**83160**	...		...	...

Year Ano Année	Model Modelo Modle	OEM #		Front			Rear	
				Fleetline	GasSLX		Fleetline	GasSLX
NEWMAR CORP (CONT'D)								
CLASS A MOTORHOMES (cont'd)								
02-04	Dutch Star & Moundain Aire Series MotorHomes with Freightliner XC Chassis	481700000493	−|−	**85900**	...		...	...
02-05	Kountry Star Series MotorHomes with Freightliner XC Chassis	16-16736-000		...	...	○|○	**85029**	...
		16-16737-000	○|○	**83160**	...		...	...
		16-16874-000	○|○	**83160**	...		...	...
		16-18103-000	−|−	**85900**	...		...	...
		1616736000		...	...	○|○	**85029**	...
		1616737000	○|○	**83160**	...		...	...
		1616874000	○|○	**83160**	...		...	...
		1618103000	−|−	**85900**	...		...	...
		141700131809		...	...	○|○	**85029**	...
		141700131810	○|○	**83160**	...		...	...
		481700000493	−|−	**85900**	...		...	...
13-20	Bay Star, Bay Star Sport & Canyon Star Series MotorHomes with Ford F53 Chassis with 16,000 lb GVW to 22,000 lb GVW	ASH25824		...	...	○|○	**83122**	**89406**
		ASH-1229	○|○	**83209**	**89414**		...	...
		ASH-25822	○|○	**83209**	**89414**		...	...
		ASH-25823	○|○	**83209**	**89414**		...	...
		ASH-25824		...	...	○|○	**83122**	**89406**
2006	Ventana Series MotorHomes with Freightliner XC Chassis	16-16736-000		...	...	○|○	**85029**	...
		16-16737-000	○|○	**83160**	...		...	...
		16-16874-000	○|○	**83160**	...		...	...
		16-18103-000	−|−	**85900**	...		...	...
		1616736000		...	...	○|○	**85029**	...
		1616737000	○|○	**83160**	...		...	...
		1616874000	○|○	**83160**	...		...	...
		1618103000	−|−	**85900**	...		...	...
		141700131809		...	...	○|○	**85029**	...
		141700131810	○|○	**83160**	...		...	...
		481700000493	−|−	**85900**	...		...	...
	Ventana Series MotorHomes with Neway AS140 w/ 14,000 lb Front Suspension	90045455		...	...	○|○	**85909**	...
NEXUS RV								
16-20	Maybach Series MotorHomes with Ford F53 Chassis with 16,000 lb GVW to 22,000 lb GVW	ASH25824		...	...	○|○	**83122**	**89406**
		ASH-1229	○|○	**83209**	**89414**		...	...
		ASH-25822	○|○	**83209**	**89414**		...	...
		ASH-25823	○|○	**83209**	**89414**		...	...
		ASH-25824		...	...	○|○	**83122**	**89406**
CLASS C MOTORHOMES								
11-12	Scenic Traveler Series MotorHomes with Ford E450 Chassis	ASH-1136		...	...	−|○	**G63623**	...
		ASH-1154	−|○	**G63622**	...		...	...
11-20	Phantom Series MotorHomes with Ford E350 & E450 Chassis	ASH-1136		...	...	−|○	**G63623**	...
12-20	Viper Series MotorHomes with Ford E350 & E450 Chassis	ASH-1136		...	...	−|○	**G63623**	...
		ASH-1154	−|○	**G63622**	...		...	...
11-22	Phantom Series MotorHomes with Ford E350 & E450 Chassis	ASH-1154	−|○	**G63622**	...		...	...
	Triumph Series MotorHomes with Ford E350 & E450 Chassis	ASH1154	−|○	**G63622**	...		...	...
		ASH-1154	−|○	**G63622**	...		...	...
NISSAN								
ADDITIONAL APPLICATIONS								
89-91	500T Models with O.E.M. Number	56101Z5014	−|○	**83162**	...		...	...

APPLICATION GUIDE - TRUCKS, TRAILERS AND BUSES

Year Ano Année	Model Modelo Modle	OEM #		Front			Rear	
				Fleetline	GasSLX		Fleetline	GasSLX
NISSAN (CONT'D)								
ADDITIONAL APPLICATIONS (cont'd)								
89-91	500T Models with O.E.M. Number	56101Z5017	−|O	**83162**	...		...	...
		56101-Z5014	−|O	**83162**	...		...	...
		56101-Z5017	−|O	**83162**	...		...	...
		56110Z5014	−|O	**83162**	...		...	...
		56110Z5017	−|O	**83162**	...		...	...
		56110-Z5014	−|O	**83162**	...		...	...
		56110-Z5017	−|O	**83162**	...		...	...
92-94	600T Models with O.E.M. Number	56101Z5014	−|O	**83162**	...		...	...
		56101Z5017	−|O	**83162**	...		...	...
		56101-Z5014	−|O	**83162**	...		...	...
		56101-Z5017	−|O	**83162**	...		...	...
		56110Z5014	−|O	**83162**	...		...	...
		56110Z5017	−|O	**83162**	...		...	...
		56110-Z5014	−|O	**83162**	...		...	...
		56110-Z5017	−|O	**83162**	...		...	...
	Models with O.E.M. Number	56210Z6003	O|O	**85308 or 89422**				
		56210-Z6003	O|O	**85308 or 89422**				
UD 18HD SERIES								
99-10	Models with 22.5" Tires	56101-30Z02	−|O	**G63610**	...		...	...
		56110-30Z02	−|O	**G63610**	...		...	...
UD 1300								
	UD 1300 Models Steer Axle	56110T8123	−|O	**G63432**	...		...	...
		56110T8129	−|O	**G63432**	...		...	...
		56110-T8123	−|O	**G63432**	...		...	...
		56110-T8129	−|O	**G63432**	...		...	...
		66400	−|O	**G63432**	...		...	...
UD 1800 SERIES								
11-13	Models with 22.5" Tires	56101-30Z02	−|O	**G63610**	...		...	...
		56110-30Z02	−|O	**G63610**	...		...	...
95-98	Models with 22.5" Tires	56101-30Z02	−|O	**G63610**	...		...	...
		56110-30Z02	−|O	**G63610**	...		...	...
UD 2000 SERIES								
95-13	Models with 22.5" Tires	56101-30Z02	−|O	**G63610**	...		...	...
		56110-30Z02	−|O	**G63610**	...		...	...
NORTH AMERICAN BUS INDUSTRIES								
	Ikaus Bus Models with O.E.M Number	481700124382	−|−	**85708**	...		...	...
		481700124382		...	...	−|−	**85708**	...
		4160003214700	−|−	**85708**	...		...	...
		4160003214700		...	...	−|−	**85708**	...
NOVA BUS								
	Additional O.E.M. Interchanges	97-9999-02514	O|O	**85700**				
		97999902514	O|O	**85700**				
	Classic Bus with O.E.M. Number	97-2201-00151	O|O	**85700**	...		...	...
		97220100151	O|O	**85700**	...		...	...
	Models with O.E.M. Number	12J510		...	...		**85733**	...
		12J-5-10		...	...		**85733**	...
		680232		...	...		**85733**	...
		680323	O|O	**85700**	...		...	...
		680326	O|O	**85700**	...		...	...

APPLICATION GUIDE - TRUCKS, TRAILERS AND BUSES

Year Ano Année	Model Modelo Modle	OEM #		Front			Rear	
				Fleetline	GasSLX		Fleetline	GasSLX
NOVA BUS (CONT'D)								
	Models with O.E.M. Number	680470		...	...	O|O	**85713**	...
		G1201339		...	...	O|O	**85702**	...
		G5008070	O|O	**85700**	...		...	...
		N22212	O|O	**85700**	...		...	...
	RTS Bus	22045526		...	...	O|O	**85702**	...
		22052014		...	...	O|O	**85702**	...
		G1011822		...	...	O|O	**85702**	...
		G1203223		...	...	O|O	**85702**	...
		OE 10086S		...	...	O|O	**85702**	...
	RTS Bus with "V" Drive	G1101590		...	...	O|O	**85713**	...
ONEIDA PRODUCTS								
	School Bus w/Heavy Duty Suspension	.....	O|O	**85307**	...		...	...
	School Bus w/Standard Suspension	.....	O|O	**83216**	...		...	...
ORION BUS INDUSTRIES								
	Additional O.E.M. Interchanges	97-9999-02635	O|O	**85732**				
		97-9999-02636	O|O	**85716**				
		0501345-11	O|O	**85732**				
		680091	O|O	**85303**	**89422**		...	...
		680102	O|O	**85712**				
		680352	–|O	**85711**				
		680506	O|O	**85732**	...		...	...
		690102	–|O	**85711**				
		010134501-4	O|O	**85307**				
		050134508	O|O	**85732**	...		...	...
		050134511	O|O	**85732**				
		050231501-4	O|O	**85716**				
		050231502-4	O|O	**85716**				
		050231507	O|O	**85716**				
		0101345014	O|O	**85307**				
		0502315014	O|O	**85716**				
		0502315024	O|O	**85716**				
		97999902635	O|O	**85732**				
		97999902636	O|O	**85716**				
		A4890		...	...	O|O	**85712**	...
		A-4890		...	...	O|O	**85712**	...
		OB020570	–|O	**85711**				
		OB020764	O|O	**85716**				
		OB3166657	O|O	**85700**				
	Models with O.E.M. Number	680274		...	...	O|O	**85716**	...
		680378	O|O	**85720**	...		...	...
		695327	O|O	**85732**	...		...	...
		695343	O|O	**85732**	...		...	...
		695366	O|O	**85732**	...		...	...
		695389	–|O	**87016**	...		...	...
		695420		...	...		**85729**	...
		695421	–|O	**87016**	...		...	...
		695440		...	...		**85729**	...
	Orion 1	010234503-4		...	...	O|O	**85308**	**89422**
		0102345034		...	...	O|O	**85308**	**89422**
	Orion 102	680504		...	...	O|O	**85716**	...
		050134501-4	O|O	**85716**	...		...	...
		050230501		...	...	O|O	**85716**	...
		050231505		...	...	O|O	**85716**	...
		0501345014	O|O	**85716**	...		...	...

APPLICATION GUIDE - TRUCKS, TRAILERS AND BUSES

Year Ano Année	Model Modelo Modle	OEM #		Front			Rear	
				Fleetline	GasSLX		Fleetline	GasSLX
ORION BUS INDUSTRIES (CONT'D)								
	Orion II	010234503-4		...	...	O|O	85308	89422
		20117501	O|O	85720	...		...	...
		020117503-4	O|O	85720	...		...	...
		20117504	O|O	85720	...		...	...
		020117504	O|O	85720	...		...	...
		20117505	O|O	85720	...		...	...
		020273541	O|O	83203	89436		...	...
		020273541-4		...	...	O|O	85000	89436
		020273544	O|O	83203	89436		...	...
		0102345034		...	...	O|O	85308	89422
		0201175034	O|O	85720	...		...	...
		0202735414		...	...	O|O	85000	89436
	Orion V	680504		...	...	O|O	85716	...
		695347	O|O	85732	...		...	...
		010134508-4	O|O	85732	...		...	...
		050134506-4	O|O	85732	...		...	...
		050134509	O|O	85732	...		...	...
		050134510	O|O	85732	...		...	...
		050134511	O|O	85732	...		...	...
		050134513	O|O	85732	...		...	...
		050231505		...	...	O|O	85716	...
		0101345084	O|O	85732	...		...	...
		0501345024	O|O	85732	...		...	...
		0501345064	O|O	85732	...		...	...
	Orion VI (M Axle) with O.E.M. Number	060131507	–|O	87016	...		...	...
		060131508	–|O	87016	...		...	...
	Orion VII - 30 ft Rear	070231527		...	...		85729	...
	Orion VII with O.E.M. Number	6430645		...	...		85729	...
		070131502	–|O	87016	...		...	...
		070131506	–|O	87016	...		...	...
		070231514		...	...		85729	...
OSHKOSH MOTORS								
	Additional O.E.M. Interchanges	2JD137	O|O	83119	...		...	...
		40-0242	O|O	83312	89409		...	...
		40-4845	O|O	85304				
		40-4951	–|O	85316	89426		...	...
		40-5348	O|O	85058	89431		...	...
		40-6967	O|O	85030 or 89440				
		12405FX1	O|O	85303 or 89422				
		26228A	O|O	83122 or 89406				
		26228-A	O|O	83122 or 89406				
		400242	O|O	83312	89409		...	...
		404845	O|O	85304				
		404951	–|O	85316	89426		...	...
		405348	O|O	85058	89431		...	...
		406967	O|O	85030 or 89440				
		665060	O|O	83122 or 89406				
		1445910	O|O	85300 or 89419				
		1573270	O|O	83207 or 89407				
		1745500	O|O	89430				
		1745500		...	...	O|O	89430	...
		2173340	O|O	85303 or 89422				
	Mobile Home - ForeTravel	1583470		...	...	O|O	85051	...
	Models with 3/4" Mounting Pins	.....	O|O	83122	89406		...	...
	Models with 16" Long Shock Absorber w/1" Mounting Pins	.....	O|O	85303	89422		...	...

APPLICATION GUIDE - TRUCKS, TRAILERS AND BUSES

Year Ano Année	Model Modelo Modle	OEM #		Front			Rear	
				Fleetline	GasSLX		Fleetline	GasSLX
OSHKOSH MOTORS (CONT'D)								
	Models with Neway Air Suspension	90044448		...	...	O|O	85051	...
	Models with O.E.M. Number	12405F	O|O	85734	...		...	...
		12405F1	O|O	85303	89422		...	...
		12405F-1	O|O	85303	89422		...	...
		651444		...	...	O|O	83221	...
		665040	O|O	85303	89422		...	...
		690049	O|O	85303	89422		...	...
		1583470		...	...	O|O	85051	...
		3638112		...	...	O|O	G63183	...
		4036892	O|O	G63605	...		...	...
		5353054	O|O	85303	89422		...	...
		5361994	O|O	85734	...		...	...
		GBL654918	O|O	83118	...		...	...
		P117099		...	...		83120	...
		P117146	O|O	83118	...		...	...
	Motor Homes with O.E.M. Number	1398980	O|O	83127	...		...	...
		RW24285	O|O	83119	...		...	...
	V - Line Coach	1573280		...	...	O|O	83221	...
OSHKOSH MOTOR TRUCK CO.								
	Models with Link Cabmate Model OKTP with O.E.M. Number	1202-0054	O|O	83021				
		12020054	O|O	83021				
	Models with O.E.M. Number	2218640	O|O	83009				
	Self - Steering Axle Shocks	2034140	O|O	646177				
OSTERLUND TRUCK								
	Additional O.E.M. Interchanges	220S510		...	...	O|O	85712	...
		220-S5-10		...	...	O|O	85712	...
	Models with O.E.M. Number	59011	O|O	83214	...		...	...
		680117	O|O	85300	89419		...	...
OTTAWA TRUCK								
	Additional O.E.M. Interchanges	9007342	O|O	85303 or 89422				
		53540451	O|O	85300 or 89419				
		90013787		...	...	−|−	85310	89423
	Models with O.E.M. Number	59011	O|O	83214	...		...	...
		680117	O|O	85300	89419		...	...
	Yard Tractor	90027577	O|O	85720	...		...	...
PACCAR								
ADDITIONAL APPLICATIONS								
	TruckMaster Shock Stamping Number	665633		...	...	−|O	85033	89427
PACIFIC TRUCK & TRAILER								
	Additional O.E.M. Interchanges	507202C1	O|O	85030	89440		...	...
PAGE SUSPENSION								
	Models with O.E.M. Number	665133		...	...	O|O	83203	89436
		665267		...	...	O|O	85029	...
	Model with LM-2000 Models Lift Axle Suspension	1080099		...	...	O|O	83203	89436
	Model with Trailmaster Air Spring Suspension	1081933		...	...	O|O	83204	...
		A2212		...	...	O|O	85029	...
		A-2212		...	...	O|O	85029	...
PAI CORP								
	Models with O.E.M. Number	HSA5067	O|O	85305	...		...	...

APPLICATION GUIDE - TRUCKS, TRAILERS AND BUSES

Year Ano Année	Model Modelo Modle	OEM #		Front			Rear	
				Fleetline	GasSLX		Fleetline	GasSLX
PAI CORP (CONT'D)								
	Models with O.E.M. Number	HSA5080	o|o	**83221**	...		...	...
		HSA5095	o|o	**83215**	...		...	...
		HSA-5067	o|o	**85305**	...		...	...
		HSA-5080	o|o	**83221**	...		...	...
		HSA-5095	o|o	**83215**	...		...	...
PEERLESS TRAILER								
	Models with Air Suspension	72-61		...	...	o|o	**83125**	...
		7261		...	...	o|o	**83125**	...
	Models with O.E.M. Number	120-1		...	...	o|o	**83125**	...
		1201		...	...	o|o	**83125**	...
PETERBILT								
210								
08-15	Models with Reyco 102 or 79KB Suspension (Drive Axle)	16725-01		...	...	o|o	**83126**	**89430**
		19495-01		...	...	o|o	**83126**	**89430**
		1672501		...	...	o|o	**83126**	**89430**
		1949501		...	...	o|o	**83126**	**89430**
		TK19679		...	...	o|o	**83126**	**89430**
220								
13-22	Models with 12,000 lb Front Axle	1707378PAC	−|−	**85182**	...		...	...
		BFRG 072	−|−	**85182**	...		...	...
13-22	Models with Hendrickson HAS - 210L or HAS - 230L Rear Air Suspension	60670-008		...	...	o|o	**83123**	**89405**
		60670-008L		...	...	o|o	**83123**	**89405**
		60670-008PLUS-2		...	...	o|o	**83123**	**89405**
		60670008		...	...	o|o	**83123**	**89405**
		60670008L		...	...	o|o	**83123**	**89405**
13-22	Models with Reyco 102AR (Standard) Rear Air Suspension	12887-01		...	...	o|o	**85013**	**89414**
		12887-02		...	...	o|o	**85013**	**89414**
		1288701		...	...	o|o	**85013**	**89414**
		1288702		...	...	o|o	**85013**	**89414**
13-22	Models with Reyco 102 or 79KB Suspension (Drive Axle)	16725-01		...	...	o|o	**83126**	**89430**
		19495-01		...	...	o|o	**83126**	**89430**
		1672501		...	...	o|o	**83126**	**89430**
		1949501		...	...	o|o	**83126**	**89430**
		TK19679		...	...	o|o	**83126**	**89430**
2007	Models with 12,000 lb Front Axle	02-02738	o|o	**85012**	**89413**		...	...
		0202738	o|o	**85012**	**89413**		...	...
		B71-6016	o|o	**85012**	**89413**		...	...
		B71-6016A	o|o	**85012**	**89413**		...	...
		B716016	o|o	**85012**	**89413**		...	...
		B716016A	o|o	**85012**	**89413**		...	...
2007	Models with Hendrickson HAS - 210L or HAS - 230L Rear Air Suspension	60670-008		...	...	o|o	**83123**	**89405**
		60670-008L		...	...	o|o	**83123**	**89405**
		60670-008PLUS-2		...	...	o|o	**83123**	**89405**
		60670008		...	...	o|o	**83123**	**89405**
		60670008L		...	...	o|o	**83123**	**89405**
2007	Models with Reyco 102AR (Standard) Rear Air Suspension	12887-01		...	...	o|o	**85013**	**89414**
		12887-02		...	...	o|o	**85013**	**89414**
		1288701		...	...	o|o	**85013**	**89414**
		1288702		...	...	o|o	**85013**	**89414**
2007	Models with Reyco 102 or 79KB Suspension (Drive Axle)	16725-01		...	...	o|o	**83126**	**89430**
		19495-01		...	...	o|o	**83126**	**89430**
		1672501		...	...	o|o	**83126**	**89430**

Year Ano Année	Model Modelo Modle	OEM #		Front			Rear	
				Fleetline	GasSLX		Fleetline	GasSLX
PETERBILT (CONT'D)								
220 (cont'd)								
2007	Models with Reyco 102 or 79KB Suspension (Drive Axle)	1949501		...	...	○|○	83126	89430
		TK19679		...	...	○|○	83126	89430
2010	Models with 12,000 lb Front Axle	02-02738	○|○	85012	89413		...	...
		0202738	○|○	85012	89413		...	...
		B71-6016	○|○	85012	89413		...	...
		B71-6016A	○|○	85012	89413		...	...
		B716016	○|○	85012	89413		...	...
		B716016A	○|○	85012	89413		...	...
2010	Models with Hendrickson HAS - 210L or HAS - 230L Rear Air Suspension	60670-008		...	...	○|○	83123	89405
		60670-008L		...	...	○|○	83123	89405
		60670-008PLUS-2		...	...	○|○	83123	89405
		60670008		...	...	○|○	83123	89405
		60670008L		...	...	○|○	83123	89405
2010	Models with Reyco 102AR (Standard) Rear Air Suspension	12887-01		...	...	○|○	85013	89414
		12887-02		...	...	○|○	85013	89414
		1288701		...	...	○|○	85013	89414
		1288702		...	...	○|○	85013	89414
2010	Models with Reyco 102 or 79KB Suspension (Drive Axle)	16725-01		...	...	○|○	83126	89430
		19495-01		...	...	○|○	83126	89430
		1672501		...	...	○|○	83126	89430
		1949501		...	...	○|○	83126	89430
		TK19679		...	...	○|○	83126	89430
2013	Models with 12,000 lb Front Axle	02-02738	○|○	85012	89413		...	...
		0202738	○|○	85012	89413		...	...
		B71-6016	○|○	85012	89413		...	...
		B71-6016A	○|○	85012	89413		...	...
		B716016	○|○	85012	89413		...	...
		B716016A	○|○	85012	89413		...	...
320								
01-18	Models with 18,000 lb to 23,000 lb Taperleaf Front Spring Suspension and Set Forward Front Axle.	02-02742	○|○	85062	89408		...	...
		0202742	○|○	85062	89408		...	...
		B71-6011	○|○	85062	89408		...	...
		B716011	○|○	85062	89408		...	...
01-18	Models with Hendrickson HMX 400/460 Haulmax with 16.5" Saddle	60680-004		...	...		83143	...
		60680-004L		...	...		83143	...
		60680004		...	...		83143	...
		60680004L		...	...		83143	...
01-18	Models with Hendrickson HMX 400/460 Haulmax with 17.5" & 18.5" Saddle	60680-005		...	...		83142	...
		60680-005L		...	...		83142	...
		60680005		...	...		83142	...
		60680005L		...	...		83142	...
02-18	Models with Peterbilt Low Air Leaf Suspension	03-08781		...	...	–|–	85069	89455
		0308781		...	...	–|–	85069	89455
		C71-1011		...	...	–|–	85069	89455
		C71-1017		...	...	–|–	85069	89455
		C711011		...	...	–|–	85069	89455
		C711017		...	...	–|–	85069	89455
10-18	Models with Neway ADZ Rear Suspension	90045605		...	...	○|○	85109	...
		90045803		...	...	○|○	85109	...
		90045812		...	...	○|○	85109	...
		471700004423		...	...	○|○	85109	...
		471700013186		...	...	○|○	85109	...

PETERBILT (CONT'D)

320 (cont'd)

Year Ano Année	Model Modelo Modle	OEM #		Front Fleetline	Front GasSLX		Rear Fleetline	Rear GasSLX
14-18	Models with Air Trac Suspension (40,000 lb)	C71-6003		...	...	−|○	85988	...
		C716003		...	...	−|○	85988	...
87-18	Models with 12,000 lb to 14,600 lb Taperleaf Spring Suspension and Set Forward Front Axle.	02-01787	○|○	85062	89408		...	...
		02-02737	○|○	85062	89408		...	...
		0201787	○|○	85062	89408		...	...
		0202737	○|○	85062	89408		...	...
		B71-6009	○|○	85062	89408		...	...
		B716009	○|○	85062	89408		...	...
87-18	Models with Air Trac Suspension (46,000 lb)	03-07421		...	...	−|○	85311	89424
		0307421		...	...	−|○	85311	89424
		C71-6002		...	...	−|○	85311	89424
		C716002		...	...	−|○	85311	89424
87-18	Models with Reyco 102AR (Standard) Rear Air Suspension	12887-01		...	...	○|○	85013	89414
		1288701		...	...	○|○	85013	89414
		1288702		...	...	○|○	85013	89414
87-18	Models with Reyco 102 or 79KB Suspension (Drive Axle)	16725-01		...	...	○|○	83126	89430
		19495-01		...	...	○|○	83126	89430
		1672501		...	...	○|○	83126	89430
		1949501		...	...	○|○	83126	89430
		TK19679		...	...	○|○	83126	89430

325

08-15	Models with 8,000 lb Front Axle	B71-6004	○|○	85084	89460		...	...
		B716004	○|○	85084	89460		...	...
08-19	Models with 12000 lb Set Back Front Axle	02-02738	○|○	85012	89413		...	...
		0202738	○|○	85012	89413		...	...
		B71-6016	○|○	85012	89413		...	...
		B71-6016A	○|○	85012	89413		...	...
		B716016	○|○	85012	89413		...	...
		B716016A	○|○	85012	89413		...	...
08-19	Models with Reyco 102 or 79KB Suspension (Drive Axle)	19495-01		...	...	○|○	83126	89430
		1949501		...	...	○|○	83126	89430
		TK19679		...	...	○|○	83126	89430

330

95-02	Models with Peterbilt 40000 lb Low Air Leaf Suspension	03-07423		...	...	−|○	85033	89427
		0307423		...	...	−|○	85033	89427
03-05	Models with Peterbilt Low Air Leaf Suspension	03-08781		...	...	−|−	85069	89455
		0308781		...	...	−|−	85069	89455
		C71-1011		...	...	−|−	85069	89455
		C71-1017		...	...	−|−	85069	89455
		C711011		...	...	−|−	85069	89455
		C711017		...	...	−|−	85069	89455
95-05	Models with 12000 lb Set Back Front Axle	02-02738	○|○	85012	89413		...	...
		0202738	○|○	85012	89413		...	...
		B71-6016	○|○	85012	89413		...	...
		B71-6016A	○|○	85012	89413		...	...
		B716016	○|○	85012	89413		...	...
		B716016A	○|○	85012	89413		...	...
95-05	Models with Air Trac Suspension (46,000 lb)	03-07421		...	...	−|○	85311	89424
		0307421		...	...	−|○	85311	89424
		C71-6002		...	...	−|○	85311	89424
		C716002		...	...	−|○	85311	89424

Year Ano Année	Model Modelo Modle	OEM #		Front			Rear	
				Fleetline	GasSLX		Fleetline	GasSLX
PETERBILT (CONT'D)								
330 (cont'd)								
95-05	Models with Reyco 79KB Rear Steel Spring Suspension	16725-01		...	...	O|O	83126	89430
		19495-01		...	...	O|O	83126	89430
		1672501		...	...	O|O	83126	89430
		1949501		...	...	O|O	83126	89430
		TK19679		...	...	O|O	83126	89430
95-05	Models with Reyco 102AR (Standard) Rear Air Suspension	12887-01		...	...	O|O	85013	89414
		12887-02		...	...	O|O	85013	89414
		1288701		...	...	O|O	85013	89414
		1288702		...	...	O|O	85013	89414
07-16	Models with 12000 lb Set Back Front Axle	02-02738	O|O	85012	89413		...	...
		0202738	O|O	85012	89413		...	...
		B71-6016	O|O	85012	89413		...	...
		B71-6016A	O|O	85012	89413		...	...
		B716016	O|O	85012	89413		...	...
		B716016A	O|O	85012	89413		...	...
07-21	Models with Air Trac Suspension (46,000 lb)	03-07421		...	...	–|O	85311	89424
		0307421		...	...	–|O	85311	89424
		C71-6002		...	...	–|O	85311	89424
		C716002		...	...	–|O	85311	89424
07-21	Models with Reyco 102AR (Standard) Rear Air Suspension	12887-01		...	...	O|O	85013	89414
		12887-02		...	...	O|O	85013	89414
		1288701		...	...	O|O	85013	89414
		1288702		...	...	O|O	85013	89414
14-21	Models with Air Trac Suspension (40,000 lb)	C71-6003		...	...	–|O	85988	...
		C716003		...	...	–|O	85988	...
07-22	Models with Peterbilt Low Air Leaf Suspension	03-08781		...	...	–|–	85069	89455
		0308781		...	...	–|–	85069	89455
		C71-1011		...	...	–|–	85069	89455
		C71-1017		...	...	–|–	85069	89455
		C711011		...	...	–|–	85069	89455
		C711017		...	...	–|–	85069	89455
07-22	Models with Reyco 79KB Rear Steel Spring Suspension	16725-01		...	...	O|O	83126	89430
		19495-01		...	...	O|O	83126	89430
		1672501		...	...	O|O	83126	89430
		1949501		...	...	O|O	83126	89430
		TK19679		...	...	O|O	83126	89430
16-22	Models with 10,000 lb to 14,600 lb Taperleaf Springs and Set Back Front Axles	B71-6019	O|O	85989	...		...	...
		B716019	O|O	85989	...		...	...
335								
05-10	Models with 12000 lb Set Back Front Axle	02-02738	O|O	85012	89413		...	...
		02-02741	O|O	85012	89413		...	...
		0202738	O|O	85012	89413		...	...
		0202741	O|O	85012	89413		...	...
		B71-6016	O|O	85012	89413		...	...
		B71-6016A	O|O	85012	89413		...	...
		B716016	O|O	85012	89413		...	...
		B716016A	O|O	85012	89413		...	...
05-10	Models with Air Trac Suspension (46,000 lb)	03-07421		...	...	–|O	85311	89424
		0307421		...	...	–|O	85311	89424
05-10	Models with Peterbilt Low Air Leaf Suspension	03-08781		...	...	–|–	85069	89455
		0308781		...	...	–|–	85069	89455
		C71-1011		...	...	–|–	85069	89455

Year Ano Année	Model Modelo Modle	OEM #		Front			Rear	
				Fleetline	GasSLX		Fleetline	GasSLX
PETERBILT (CONT'D)								
335 (cont'd)								
05-10	Models with Peterbilt Low Air Leaf Suspension	C71-1017		...	...	−|−	85069	89455
		C711011		...	...	−|−	85069	89455
		C711017		...	...	−|−	85069	89455
337								
10-14	Models with 10,000 lb to 12,000 lb Front Axle	B71-6005	o|o	85084	89460		...	...
		B716005	o|o	85084	89460		...	...
10-14	Models with 13,200 lb to 14,600 lb Front Axle	B71-6006	o|o	85084	89460		...	...
		B716006	o|o	85084	89460		...	...
10-21	Models with Reyco 102AR (Standard) Rear Air Suspension	85013ac0		...	...	o|o	85013	89414
		12887-01		...	...	o|o	85013	89414
		12887-02		...	...	o|o	85013	89414
		1288701		...	...	o|o	85013	89414
		1288702		...	...	o|o	85013	89414
14-21	Models with Air Trac Suspension (40,000 lb)	C71-6003		...	...	−|o	85988	...
		C716003		...	...	−|o	85988	...
10-22	Models with Reyco 79KB Rear Steel Spring Suspension	16725-01		...	...	o|o	83126	89430
		19495-01		...	...	o|o	83126	89430
		1672501		...	...	o|o	83126	89430
		1949501		...	...	o|o	83126	89430
		TK19679		...	...	o|o	83126	89430
10-23	Models with Air Trac Suspension (46,000 lb)	03-07421		...	...	−|o	85311	89424
		0307421		...	...	−|o	85311	89424
		C71-6002		...	...	−|o	85311	89424
		C716002		...	...	−|o	85311	89424
10-23	Models with Neway ADZ Rear Suspension	90045605		...	...	o|o	85109	...
		90045803		...	...	o|o	85109	...
		90045812		...	...	o|o	85109	...
		471700004423		...	...	o|o	85109	...
		471700013186		...	...	o|o	85109	...
10-23	Models with Peterbilt Low Air Leaf Suspension	03-08781		...	...	−|−	85069	89455
		0308781		...	...	−|−	85069	89455
		C71-1011		...	...	−|−	85069	89455
		C71-1017		...	...	−|−	85069	89455
		C711011		...	...	−|−	85069	89455
		C711017		...	...	−|−	85069	89455
15-23	Models with 10,000 lb to 14,600 lb Taperleaf Springs and Set Back Front Axles	B71-6019	o|o	85989	...		...	...
		B716019	o|o	85989	...		...	...
340								
07-10	Models with 12000 lb Set Back Front Axle	02-02738	o|o	85012	89413		...	...
		02-02741	o|o	85012	89413		...	...
		0202738	o|o	85012	89413		...	...
		0202741	o|o	85012	89413		...	...
		B71-6016	o|o	85012	89413		...	...
		B71-6016A	o|o	85012	89413		...	...
		B716016	o|o	85012	89413		...	...
		B716016A	o|o	85012	89413		...	...
07-10	Models with Air Trac Suspension (46,000 lb)	03-07421		...	...	−|o	85311	89424
		0307421		...	...	−|o	85311	89424
348								
12-13	Models with 10,000 lb to 12,000 lb Front Axle	B71-6005	o|o	85084	89460		...	...

Year Ano Année	Model Modelo Modle	OEM #		Front			Rear	
				Fleetline	GasSLX		Fleetline	GasSLX
PETERBILT (CONT'D)								
348 (cont'd)								
12-13	Models with 10,000 lb to 12,000 lb Front Axle	B716005	O|O	**85084**	**89460**		...	...
15-16	Models with O.E.M. Number	B71-6012	O|O	**85119**	...		...	...
		B716012	O|O	**85119**	...		...	...
10-20	Day Cab Models with O.E.M. Number	1202-0054	O|O	**83021**				
		12020054	O|O	**83021**				
10-20	Models with Sleepers with O.E.M. Number	1201-8002	O|O	**83081**				
		12018002	O|O	**83081**				
		25523024	O|O	**83081**				
		R71-6009	O|O	**83081**				
		R716009	O|O	**83081**				
10-21	Models with Reyco 102AR (Standard) Rear Air Suspension	12887-01		...	...	O|O	**85013**	**89414**
		12887-02		...	...	O|O	**85013**	**89414**
		1288701		...	...	O|O	**85013**	**89414**
		1288702		...	...	O|O	**85013**	**89414**
14-21	Models with Air Trac Suspension (40,000 lb)	C71-6003		...	...	–|O	**85988**	...
		C716003		...	...	–|O	**85988**	...
10-22	Models with Reyco 79KB Rear Steel Spring Suspension	16725-01		...	...	O|O	**83126**	**89430**
		19495-01		...	...	O|O	**83126**	**89430**
		1672501		...	...	O|O	**83126**	**89430**
		1949501		...	...	O|O	**83126**	**89430**
		TK19679		...	...	O|O	**83126**	**89430**
14-22	Models with 10,000 lb to 14,600 lb Taperleaf Springs and Set Back Front Axles	B71-6019	O|O	**85989**	...		...	...
		B716019	O|O	**85989**	...		...	...
10-23	Models with Air Trac Suspension (46,000 lb)	03-07421		...	...	–|O	**85311**	**89424**
		0307421		...	...	–|O	**85311**	**89424**
		C71-6002		...	...	–|O	**85311**	**89424**
		C716002		...	...	–|O	**85311**	**89424**
10-23	Models with Hendrickson HMX 400/460 Haulmax with 16.5" Saddle	60680-004		...	...		**83143**	...
		60680-004L		...	...		**83143**	...
		60680004		...	...		**83143**	...
		60680004L		...	...		**83143**	...
10-23	Models with Hendrickson HMX 400/460 Haulmax with 17.5" & 18.5" Saddle	60680-005		...	...		**83142**	...
		60680-005L		...	...		**83142**	...
		60680005		...	...		**83142**	...
		60680005L		...	...		**83142**	...
10-23	Models with Neway ADZ Rear Suspension	90045605		...	...	O|O	**85109**	...
		90045803		...	...	O|O	**85109**	...
		90045812		...	...	O|O	**85109**	...
		471700004423		...	...	O|O	**85109**	...
		471700013186		...	...	O|O	**85109**	...
12-23	Conventional Day Cab with O.E.M. Number	R71-6005	O|O	**83042**				
		R716005	O|O	**83042**				
14-23	Models with 20,000 lb Taperleaf Springs and Set Back Front Axles	B71-6020	O|O	**85989**	...		...	...
		B716020	O|O	**85989**	...		...	...
81-84	Day Cab Models with O.E.M. Number	1202-0054	O|O	**83021**				
		12020054	O|O	**83021**				
2018	Day Cab Models with O.E.M. Number	1201-8001	O|O	**83908**				
		12018001	O|O	**83908**				
		25523002	O|O	**83908**				
349								
84-87	349 Conventional Models with 12000 lb capacity	02-00376	O|O	**85302**	**89420**		...	...

APPLICATION GUIDE - TRUCKS, TRAILERS AND BUSES

Year Ano Année	Model Modelo Modle	OEM #		Front			Rear	
				Fleetline	GasSLX		Fleetline	GasSLX
PETERBILT (CONT'D)								
349 (cont'd)								
84-87	349 Conventional Models with 12000 lb capacity	02-00495	O|O	**85302**	**89420**		...	...
		02-02736	O|O	**85302**	**89420**		...	...
		0200376	O|O	**85302**	**89420**		...	...
		0200495	O|O	**85302**	**89420**		...	...
		0202736	O|O	**85302**	**89420**		...	...
353								
81-88	353 Conventional Models with 12000 lb capacity	02-00376	O|O	**85302**	**89420**		...	...
		02-00495	O|O	**85302**	**89420**		...	...
		02-02736	O|O	**85302**	**89420**		...	...
		0200376	O|O	**85302**	**89420**		...	...
		0200495	O|O	**85302**	**89420**		...	...
		0202736	O|O	**85302**	**89420**		...	...
357								
87-01	Models with Peterbilt Low Air Leaf Suspension	03-07423		...	...	–|O	**85033**	**89427**
		0307423		...	...	–|O	**85033**	**89427**
		665633		...	...	–|O	**85033**	**89427**
02-08	Models with Hendrickson HMX 400/460 Haulmax with 16.5" Saddle	60680-004		...	...		**83143**	...
		60680-004L		...	...		**83143**	...
		60680004		...	...		**83143**	...
		60680004L		...	...		**83143**	...
02-08	Models with Hendrickson HMX 400/460 Haulmax with 17.5" & 18.5" Saddle	60680-005		...	...		**83142**	...
		60680-005L		...	...		**83142**	...
		60680005		...	...		**83142**	...
		60680005L		...	...		**83142**	...
02-08	Models with Peterbilt Low Air Leaf Suspension	03-08781		...	...	–|–	**85069**	**89455**
		0308781		...	...	–|–	**85069**	**89455**
		C71-1017		...	...	–|–	**85069**	**89455**
		C711017		...	...	–|–	**85069**	**89455**
86-08	Conventional Models with Front Air Suspension and Set Back Front Axle.	02-02739	O|O	**85013**	**89414**		...	...
		0202739	O|O	**85013**	**89414**		...	...
86-08	Conventional Models with Front Air Suspension and without Set Back Front Axle.	02-02740	O|O	**85036**	**89405**		...	...
		0202740	O|O	**85036**	**89405**		...	...
86-08	Models with Link Cabmate Models PBC377 & PBC377-A	1202-0054	O|O	**83021**				
		12020054	O|O	**83021**				
87-08	Conventional Models with Spring Suspension and with Set Back Front Axle.	02-01890	O|O	**85012**	**89413**		...	...
		02-02738	O|O	**85012**	**89413**		...	...
		02-02741	O|O	**85012**	**89413**		...	...
		0201890	O|O	**85012**	**89413**		...	...
		0202738	O|O	**85012**	**89413**		...	...
		0202741	O|O	**85012**	**89413**		...	...
		B71-6016	O|O	**85012**	**89413**		...	...
		B71-6016A	O|O	**85012**	**89413**		...	...
		B716016	O|O	**85012**	**89413**		...	...
		B716016A	O|O	**85012**	**89413**		...	...
87-08	Models with 12,000 lb to 14,600 lb Taperleaf Spring Suspension and Set Forward Front Axle.	02-02737	O|O	**85062**	**89408**		...	...
		0202737	O|O	**85062**	**89408**		...	...
		B71-6007	O|O	**85062**	**89408**		...	...
		B71-6009	O|O	**85062**	**89408**		...	...
		B716007	O|O	**85062**	**89408**		...	...
		B716009	O|O	**85062**	**89408**		...	...
87-08	Models with 18,000 lb to 23,000 lb Taperleaf Front Spring Suspension and Set Forward Front Axle.	02-02742	O|O	**85062**	**89408**		...	...

Year Ano Année	Model Modelo Modle	OEM #		Front			Rear	
				Fleetline	GasSLX		Fleetline	GasSLX
PETERBILT (CONT'D)								
357 (cont'd)								
87-08	Models with 18,000 lb to 23,000 lb Taperleaf Front Spring Suspension and Set Forward Front Axle.	0202742	O|O	85062	89408		...	...
		B71-6011	O|O	85062	89408		...	...
		B716011	O|O	85062	89408		...	...
87-08	Models with Air Trac Suspension (46,000 lb)	03-07421		...	...	–|O	85311	89424
		0307421		...	...	–|O	85311	89424
87-08	Models with Chalmers 40,000 lb Rear Suspension	665174		...	...	O|O	85060	...
		800670		...	...	O|O	85060	...
87-08	Models with Neway ARD 125/244-8 Models Rear Air Suspension	90044011		...	...	O|O	85004	...
97-08	Models with Air Track Tandem with TRD8000 Pusher Axle	03-08350		...	...	–|O	85343	...
		0308350		...	...	–|O	85343	...
		C71-6004		...	...	–|O	85343	...
		C716004		...	...	–|O	85343	...
359								
81-87	359 Conventional Models with 12000 lb capacity	02-00376	O|O	85302	89420		...	...
		02-00495	O|O	85302	89420		...	...
		02-02736	O|O	85302	89420		...	...
		0200376	O|O	85302	89420		...	...
		0200495	O|O	85302	89420		...	...
		0202736	O|O	85302	89420		...	...
81-87	359 Models (Older Models) Conventional Tractors with Link Cabmate Model PBCAL359	1201-0012	O|O	83023				
		1202-0012	O|O	83023				
		12010012	O|O	83023				
		12020012	O|O	83023				
81-87	Models with Air Trac Suspension (46,000 lb)	03-07421		...	...	–|O	85311	89424
		0307421		...	...	–|O	85311	89424
81-88	359 Conventional Truck & Tractors with Link Cabmate Models PBC379 & PBC379-A	1202-0054	O|O	83021				
		12020054	O|O	83021				
362								
81-01	Models with Peterbilt Low Air Leaf Suspension	03-07423		...	...	–|O	85033	89427
		0307423		...	...	–|O	85033	89427
		665633		...	...	–|O	85033	89427
02-06	Models with Peterbilt Low Air Leaf Suspension	03-08781		...	...	–|–	85069	89455
		0308781		...	...	–|–	85069	89455
		C71-1017		...	...	–|–	85069	89455
		C711017		...	...	–|–	85069	89455
81-06	C.O.E. Models without Set Back Front Axle	02-00376	O|O	85302	89420		...	...
		02-00495	O|O	85302	89420		...	...
		0200376	O|O	85302	89420		...	...
		0200495	O|O	85302	89420		...	...
81-06	C.O.E. Models with Progressive Springs	02-02738	O|O	85012	89413		...	...
		0202738	O|O	85012	89413		...	...
		B71-6016	O|O	85012	89413		...	...
		B71-6016A	O|O	85012	89413		...	...
		B716016	O|O	85012	89413		...	...
		B716016A	O|O	85012	89413		...	...
81-06	Models with Air Trac Suspension (46,000 lb)	03-07421		...	...	–|O	85311	89424
		0307421		...	...	–|O	85311	89424
81-06	Models with Chalmers 40,000 lb Rear Suspension	665174		...	...	O|O	85060	...
		800670		...	...	O|O	85060	...
81-06	Models with Link Cabmate Model PB-362-2P	1202-0032	O|O	83016				

Year Ano Année	Model Modelo Modle	OEM #		Front			Rear	
				Fleetline	GasSLX		Fleetline	GasSLX
PETERBILT (CONT'D)								
362 (cont'd)								
81-06	Models with Link Cabmate Model PB-362-2P	12020032	O|O	**83016**				
81-06	Models with Neway ARD 125/244-8 Models Rear Air Suspension	90044011		...	...	O|O	**85004**	...
86-06	C.O.E. Models with 14600 lb Taper Leaf Springs and Set Back Front Axle	02-02740	O|O	**85036**	89405		...	...
		0202740	O|O	**85036**	89405		...	...
365								
08-15	Models with 12,000 lb to 16,000 lb Taperleaf Front Suspension (Set-Back Axle)	B71-6002	O|O	**85012**	89413		...	...
		B71-6013	O|O	**85012**	89413		...	...
		B716002	O|O	**85012**	89413		...	...
		B716013	O|O	**85012**	89413		...	...
08-19	Models with Chalmers 40,000 lb Rear Suspension	665174		...	...	O|O	**85060**	...
		800670		...	...	O|O	**85060**	...
10-19	Models with Reyco 102AR (Standard) Rear Air Suspension	12887-01		...	...	O|O	**85013**	89414
		12887-02		...	...	O|O	**85013**	89414
		1288701		...	...	O|O	**85013**	89414
		1288702		...	...	O|O	**85013**	89414
08-20	Models with 12,000 lb to 14,600 lb Taperleaf Spring Suspension and Set Forward Front Axle.	B71-6007	O|O	**85062**	89408		...	...
		B716007	O|O	**85062**	89408		...	...
08-20	Models with FlexAir Suspension (38000 lb)	C71-1002		...	...	O|O	**85067**	89451
		C71-1016		...	...	O|O	**85067**	89451
		C71-6000		...	...	O|O	**85067**	89451
		C71-6015		...	...	O|O	**85067**	89451
		C711002		...	...	O|O	**85067**	89451
		C711016		...	...	O|O	**85067**	89451
		C716000		...	...	O|O	**85067**	89451
		C716015		...	...	O|O	**85067**	89451
08-21	Conventional Day Cab with O.E.M. Number	20-16755	O|O	**83042**				
		2016755	O|O	**83042**				
		R71-6005	O|O	**83042**				
		R716005	O|O	**83042**				
14-21	Models with Air Trac Suspension (40,000 lb)	C71-6003		...	...	-|O	**85988**	...
		C716003		...	...	-|O	**85988**	...
08-22	Models with 18,000 lb to 23,000 lb Taperleaf Front Spring Suspension and Set Forward Front Axle.	02-02742	O|O	**85062**	89408		...	...
		0202742	O|O	**85062**	89408		...	...
		B71-6011	O|O	**85062**	89408		...	...
		B716011	O|O	**85062**	89408		...	...
10-22	Models with Reyco 79KB Rear Steel Spring Suspension	16725-01		...	...	O|O	**83126**	89430
		19495-01		...	...	O|O	**83126**	89430
		1672501		...	...	O|O	**83126**	89430
		1949501		...	...	O|O	**83126**	89430
		TK19679		...	...	O|O	**83126**	89430
08-23	Models with Air Trac Suspension (46,000 lb)	03-07421		...	...	-|O	**85311**	89424
		0307421		...	...	-|O	**85311**	89424
		C71-6002		...	...	-|O	**85311**	89424
		C716002		...	...	-|O	**85311**	89424
08-23	Models with Hendrickson HMX 400/460 Haulmax with 16.5" Saddle	60680-004		...	...		**83143**	...
		60680-004L		...	...		**83143**	...
		60680004		...	...		**83143**	...
		60680004L		...	...		**83143**	...
08-23	Models with Hendrickson HMX 400/460 Haulmax with 17.5" & 18.5" Saddle	60680-005		...	...		**83142**	...
		60680-005L		...	...		**83142**	...
		60680005		...	...		**83142**	...

Year Ano Année	Model Modelo Modle	OEM #		Front			Rear	
				Fleetline	GasSLX		Fleetline	GasSLX
PETERBILT (CONT'D)								
365 (cont'd)								
08-23	Models with Hendrickson HMX 400/460 Haulmax with 17.5" & 18.5" Saddle	60680005L		...	...		83142	...
08-23	Models with Peterbilt Low Air Leaf Suspension	03-08781		...	...	–|–	85069	89455
		0308781		...	...	–|–	85069	89455
		C71-1011		...	...	–|–	85069	89455
		C71-1017		...	...	–|–	85069	89455
		C71-6005		...	...	–|–	85069	89455
		C711011		...	...	–|–	85069	89455
		C711017		...	...	–|–	85069	89455
		C716005		...	...	–|–	85069	89455
10-23	Models with Neway ADZ Rear Suspension	90045605		...	...	O|O	85109	...
		90045803		...	...	O|O	85109	...
		90045812		...	...	O|O	85109	...
		471700004423		...	...	O|O	85109	...
		471700013186		...	...	O|O	85109	...
367								
08-16	Models with 10,000 lb to 16,000 lb Taperleaf Front Spring Suspension and with Set Back Front Axle.	B71-6002	O|O	85012	89413		...	...
		B71-6016	O|O	85012	89413		...	...
		B716002	O|O	85012	89413		...	...
		B716016	O|O	85012	89413		...	...
08-19	Models with Chalmers 40,000 lb Rear Suspension	665174		...	...	O|O	85060	...
		800670		...	...	O|O	85060	...
08-20	367 Models with 70" Sleepers	29-02455	O|O	83008				
		2902455	O|O	83008				
		R71-6007	O|O	83008				
		R716007	O|O	83008				
08-20	Models with FlexAir Suspension (38000 lb)	C71-1002		...	...	O|O	85067	89451
		C71-1016		...	...	O|O	85067	89451
		C71-6000		...	...	O|O	85067	89451
		C71-6015		...	...	O|O	85067	89451
		C711002		...	...	O|O	85067	89451
		C711016		...	...	O|O	85067	89451
		C716000		...	...	O|O	85067	89451
		C716015		...	...	O|O	85067	89451
14-20	Models with 12,000 lb to 14,600 lb Taperleaf Spring Suspension and Set Forward Front Axle.	B71-6009	O|O	85062	89408		...	...
		B716009	O|O	85062	89408		...	...
14-20	Models with Air Trac Suspension (40,000 lb)	C71-6003		...	...	–|O	85988	...
		C716003		...	...	–|O	85988	...
08-23	Conventional Day Cab with O.E.M. Number	20-16755	O|O	83042				
		2016755	O|O	83042				
		R71-6005	O|O	83042				
		R716005	O|O	83042				
08-23	Models with 18,000 lb to 23,000 lb Taperleaf Front Spring Suspension and Set Forward Front Axle.	02-02742	O|O	85062	89408		...	...
		0202742	O|O	85062	89408		...	...
		B71-6007	O|O	85062	89408		...	...
		B71-6011	O|O	85062	89408		...	...
		B716007	O|O	85062	89408		...	...
		B716011	O|O	85062	89408		...	...
08-23	Models with Air Trac Suspension (46,000 lb)	03-07421		...	...	–|O	85311	89424
		0307421		...	...	–|O	85311	89424
		C71-6002		...	...	–|O	85311	89424
		C716002		...	...	–|O	85311	89424

Year Ano Année	Model Modelo Modle	OEM #		Front			Rear	
				Fleetline	GasSLX		Fleetline	GasSLX
PETERBILT (CONT'D)								
367 (cont'd)								
08-23	Models with Hendrickson HMX 400/460 Haulmax with 16.5" Saddle	60680-004		...	...		83143	...
		60680-004L		...	...		83143	...
		60680004		...	...		83143	...
		60680004L		...	...		83143	...
08-23	Models with Hendrickson HMX 400/460 Haulmax with 17.5" & 18.5" Saddle	60680-005		...	...		83142	...
		60680-005L		...	...		83142	...
		60680005		...	...		83142	...
		60680005L		...	...		83142	...
08-23	Models with Peterbilt Low Air Leaf Suspension	03-08781		...	...	−|−	85069	89455
		0308781		...	...	−|−	85069	89455
		C71-1011		...	...	−|−	85069	89455
		C71-1017		...	...	−|−	85069	89455
		C711011		...	...	−|−	85069	89455
		C711017		...	...	−|−	85069	89455
10-23	Models with Neway ADZ Rear Suspension	90045605		...	...	o|o	85109	...
		90045803		...	...	o|o	85109	...
		90045812		...	...	o|o	85109	...
		471700004423		...	...	o|o	85109	...
		471700013186		...	...	o|o	85109	...
372								
89-93	C.O.E. Models with Front Air Suspension	02-02739	o|o	85013	89414		...	...
		0202739	o|o	85013	89414		...	...
89-93	C.O.E. Models with Front Spring Suspension	02-02738	o|o	85012	89413		...	...
		0202738	o|o	85012	89413		...	...
		B71-6016	o|o	85012	89413		...	...
		B71-6016A	o|o	85012	89413		...	...
		B716016	o|o	85012	89413		...	...
		B716016A	o|o	85012	89413		...	...
89-93	Models with Air Trac Suspension (46,000 lb)	03-07421		...	...	−|o	85311	89424
		0307421		...	...	−|o	85311	89424
89-93	Models with Chalmers 40,000 lb Rear Suspension	665174		...	...	o|o	85060	...
		800670		...	...	o|o	85060	...
89-93	Models with Neway ARD 125/244-8 Models Rear Air Suspension	90044011		...	...	o|o	85004	...
89-93	Models with Peterbilt Low Air Leaf Suspension	03-07423		...	...	−|o	85033	89427
		0307423		...	...	−|o	85033	89427
		665633		...	...	−|o	85033	89427
375								
87-96	Conventional Models with Front Air Suspension and Set Back Front Axle.	02-02739	o|o	85013	89414		...	...
		0202739	o|o	85013	89414		...	...
87-96	Conventional Models with Front Air Suspension and without Set Back Front Axle.	02-02740	o|o	85036	89405		...	...
		0202740	o|o	85036	89405		...	...
87-96	Conventional Models with Spring Suspension and with Set Back Front Axle.	02-02738	o|o	85012	89413		...	...
		02-02741	o|o	85012	89413		...	...
		0202738	o|o	85012	89413		...	...
		0202741	o|o	85012	89413		...	...
		B71-6016	o|o	85012	89413		...	...
		B71-6016A	o|o	85012	89413		...	...
		B716016	o|o	85012	89413		...	...
		B716016A	o|o	85012	89413		...	...
87-96	Models with 12,000 lb to 14,600 lb Taperleaf Spring Suspension and Set Forward Front Axle.	02-02737	o|o	85062	89408		...	...

PETERBILT (CONT'D)

375 (cont'd)

Year Ano Année	Model Modelo Modle	OEM #		Front Fleetline	Front GasSLX		Rear Fleetline	Rear GasSLX
87-96	Models with 12,000 lb to 14,600 lb Taperleaf Spring Suspension and Set Forward Front Axle.	0202737	O|O	85062	89408		...	...
		B71-6007	O|O	85062	89408		...	...
		B71-6009	O|O	85062	89408		...	...
		B716007	O|O	85062	89408		...	...
		B716009	O|O	85062	89408		...	...
87-96	Models with 18,000 lb to 23,000 lb Taperleaf Front Spring Suspension and Set Forward Front Axle.	02-02742	O|O	85062	89408		...	...
		0202742	O|O	85062	89408		...	...
		B71-6011	O|O	85062	89408		...	...
		B716011	O|O	85062	89408		...	...
87-96	Models with Air Trac Suspension (46,000 lb)	03-07421		...	...	–|O	85311	89424
		0307421		...	...	–|O	85311	89424
87-96	Models with Chalmers 40,000 lb Rear Suspension	665174		...	...	O|O	85060	...
		800670		...	...	O|O	85060	...
87-96	Models with Link Cabmate Models PBC377 & PBC377-A	1202-0054	O|O	83021				
		12020054	O|O	83021				
87-96	Models with Neway ARD 125/244-8 Models Rear Air Suspension	90044011		...	...	O|O	85004	...
87-96	Models with Peterbilt Low Air Leaf Suspension	03-07423		...	...	–|O	85033	89427
		0307423		...	...	–|O	85033	89427
		665633		...	...	–|O	85033	89427

376

Year Ano Année	Model Modelo Modle	OEM #		Front Fleetline	Front GasSLX		Rear Fleetline	Rear GasSLX
88-90	Models with 12,000 lb to 14,600 lb Taperleaf Spring Suspension and Set Forward Front Axle.	02-02737	O|O	85062	89408		...	...
		0202737	O|O	85062	89408		...	...
		B71-6007	O|O	85062	89408		...	...
		B71-6009	O|O	85062	89408		...	...
		B716007	O|O	85062	89408		...	...
		B716009	O|O	85062	89408		...	...
88-90	Models with 18,000 lb to 23,000 lb Taperleaf Front Spring Suspension and Set Forward Front Axle.	02-02742	O|O	85062	89408		...	...
		0202742	O|O	85062	89408		...	...
		B71-6011	O|O	85062	89408		...	...
		B716011	O|O	85062	89408		...	...
88-92	Conventional Models with Front Air Suspension and Set Back Front Axle.	02-02739	O|O	85013	89414		...	...
		0202739	O|O	85013	89414		...	...
88-92	Conventional Models with Front Air Suspension and without Set Back Front Axle.	02-02740	O|O	85036	89405		...	...
		0202740	O|O	85036	89405		...	...
88-92	Conventional Models with Spring Suspension and with Set Back Front Axle.	02-02738	O|O	85012	89413		...	...
		02-02741	O|O	85012	89413		...	...
		0202738	O|O	85012	89413		...	...
		0202741	O|O	85012	89413		...	...
		B71-6016	O|O	85012	89413		...	...
		B71-6016A	O|O	85012	89413		...	...
		B716016	O|O	85012	89413		...	...
		B716016A	O|O	85012	89413		...	...
88-92	Models with Air Trac Suspension (46,000 lb)	03-07421		...	...	–|O	85311	89424
		0307421		...	...	–|O	85311	89424
88-92	Models with Chalmers 40,000 lb Rear Suspension	665174		...	...	O|O	85060	...
		800670		...	...	O|O	85060	...
88-92	Models with Neway ARD 125/244-8 Models Rear Air Suspension	90044011		...	...	O|O	85004	...
88-92	Models with Peterbilt Low Air Leaf Suspension	03-07423		...	...	–|O	85033	89427
		0307423		...	...	–|O	85033	89427
		665633		...	...	–|O	85033	89427

PETERBILT (CONT'D)

376 (cont'd)

Year Ano Année	Model Modelo Modle	OEM #		Front			Rear	
				Fleetline	GasSLX		Fleetline	GasSLX
94-96	Conventional Models with Front Air Suspension and Set Back Front Axle.	02-02739	O|O	**85013**	**89414**		...	...
		0202739	O|O	**85013**	**89414**		...	...
94-96	Conventional Models with Front Air Suspension and without Set Back Front Axle.	02-02740	O|O	**85036**	**89405**		...	...
		0202740	O|O	**85036**	**89405**		...	...
94-96	Conventional Models with Spring Suspension and with Set Back Front Axle.	02-02738	O|O	**85012**	**89413**		...	...
		02-02741	O|O	**85012**	**89413**		...	...
		0202738	O|O	**85012**	**89413**		...	...
		0202741	O|O	**85012**	**89413**		...	...
		B71-6016	O|O	**85012**	**89413**		...	...
		B71-6016A	O|O	**85012**	**89413**		...	...
		B716016	O|O	**85012**	**89413**		...	...
		B716016A	O|O	**85012**	**89413**		...	...
94-96	Models with Air Trac Suspension (46,000 lb)	03-07421		...	...	–|O	**85311**	**89424**
		0307421		...	...	–|O	**85311**	**89424**
94-96	Models with Chalmers 40,000 lb Rear Suspension	665174		...	...	O|O	**85060**	...
		800670		...	...	O|O	**85060**	...
94-96	Models with Neway ARD 125/244-8 Models Rear Air Suspension	90044011		...	...	O|O	**85004**	...
94-96	Models with Peterbilt Low Air Leaf Suspension	03-07423		...	...	–|O	**85033**	**89427**
		0307423		...	...	–|O	**85033**	**89427**
		665633		...	...	–|O	**85033**	**89427**
95-96	Models with 12,000 lb to 14,600 lb Taperleaf Spring Suspension and Set Forward Front Axle.	02-02737	O|O	**85062**	**89408**		...	...
		0202737	O|O	**85062**	**89408**		...	...
		B71-6007	O|O	**85062**	**89408**		...	...
		B71-6009	O|O	**85062**	**89408**		...	...
		B716007	O|O	**85062**	**89408**		...	...
		B716009	O|O	**85062**	**89408**		...	...
95-96	Models with 18,000 lb to 23,000 lb Taperleaf Front Spring Suspension and Set Forward Front Axle.	02-02742	O|O	**85062**	**89408**		...	...
		0202742	O|O	**85062**	**89408**		...	...
		B71-6011	O|O	**85062**	**89408**		...	...
		B716011	O|O	**85062**	**89408**		...	...
1992	Models with 12,000 lb to 14,600 lb Taperleaf Spring Suspension and Set Forward Front Axle.	02-02737	O|O	**85062**	**89408**		...	...
		0202737	O|O	**85062**	**89408**		...	...
		B71-6007	O|O	**85062**	**89408**		...	...
		B71-6009	O|O	**85062**	**89408**		...	...
		B716007	O|O	**85062**	**89408**		...	...
		B716009	O|O	**85062**	**89408**		...	...
1992	Models with 18,000 lb to 23,000 lb Taperleaf Front Spring Suspension and Set Forward Front Axle.	02-02742	O|O	**85062**	**89408**		...	...
		0202742	O|O	**85062**	**89408**		...	...
		B71-6011	O|O	**85062**	**89408**		...	...
		B716011	O|O	**85062**	**89408**		...	...
1999	Conventional Models with Front Air Suspension and Set Back Front Axle.	02-02739	O|O	**85013**	**89414**		...	...
		0202739	O|O	**85013**	**89414**		...	...
1999	Conventional Models with Front Air Suspension and without Set Back Front Axle.	02-02740	O|O	**85036**	**89405**		...	...
		0202740	O|O	**85036**	**89405**		...	...
1999	Conventional Models with Spring Suspension and with Set Back Front Axle.	02-02738	O|O	**85012**	**89413**		...	...
		02-02741	O|O	**85012**	**89413**		...	...
		0202738	O|O	**85012**	**89413**		...	...
		0202741	O|O	**85012**	**89413**		...	...
		B71-6016	O|O	**85012**	**89413**		...	...
		B71-6016A	O|O	**85012**	**89413**		...	...

Year Ano Année	Model Modelo Modle	OEM #		Front			Rear	
				Fleetline	GasSLX		Fleetline	GasSLX
PETERBILT (CONT'D)								
376 (cont'd)								
1999	Conventional Models with Spring Suspension and with Set Back Front Axle.	B716016	O|O	**85012**	**89413**		...	...
		B716016A	O|O	**85012**	**89413**		...	...
1999	Models with 12,000 lb to 14,600 lb Taperleaf Spring Suspension and Set Forward Front Axle.	02-02737	O|O	**85062**	**89408**		...	...
		0202737	O|O	**85062**	**89408**		...	...
		B71-6007	O|O	**85062**	**89408**		...	...
		B71-6009	O|O	**85062**	**89408**		...	...
		B716007	O|O	**85062**	**89408**		...	...
		B716009	O|O	**85062**	**89408**		...	...
1999	Models with 18,000 lb to 23,000 lb Taperleaf Front Spring Suspension and Set Forward Front Axle.	02-02742	O|O	**85062**	**89408**		...	...
		0202742	O|O	**85062**	**89408**		...	...
		B71-6011	O|O	**85062**	**89408**		...	...
		B716011	O|O	**85062**	**89408**		...	...
1999	Models with Air Trac Suspension (46,000 lb)	03-07421		...	...	–|O	**85311**	**89424**
		0307421		...	...	–|O	**85311**	**89424**
1999	Models with Chalmers 40,000 lb Rear Suspension	665174		...	...	O|O	**85060**	...
		800670		...	...	O|O	**85060**	...
1999	Models with Neway ARD 125/244-8 Models Rear Air Suspension	90044011		...	...	O|O	**85004**	...
1999	Models with Peterbilt Low Air Leaf Suspension	03-07423		...	...	–|O	**85033**	**89427**
		0307423		...	...	–|O	**85033**	**89427**
		665633		...	...	–|O	**85033**	**89427**
377								
87-01	Conventional Models with Front Air Suspension and Set Back Front Axle.	02-02739	O|O	**85013**	**89414**		...	...
		0202739	O|O	**85013**	**89414**		...	...
87-01	Conventional Models with Front Air Suspension and without Set Back Front Axle.	02-02740	O|O	**85036**	**89405**		...	...
		0202740	O|O	**85036**	**89405**		...	...
87-01	Conventional Models with Spring Suspension and with Set Back Front Axle.	02-02738	O|O	**85012**	**89413**		...	...
		02-02741	O|O	**85012**	**89413**		...	...
		0202738	O|O	**85012**	**89413**		...	...
		0202741	O|O	**85012**	**89413**		...	...
87-01	Models with 12,000 lb to 14,600 lb Taperleaf Spring Suspension and Set Forward Front Axle.	02-02737	O|O	**85062**	**89408**		...	...
		0202737	O|O	**85062**	**89408**		...	...
		B71-6007	O|O	**85062**	**89408**		...	...
		B71-6009	O|O	**85062**	**89408**		...	...
		B716007	O|O	**85062**	**89408**		...	...
		B716009	O|O	**85062**	**89408**		...	...
87-01	Models with 18,000 lb to 23,000 lb Taperleaf Front Spring Suspension and Set Forward Front Axle.	02-02742	O|O	**85062**	**89408**		...	...
		0202742	O|O	**85062**	**89408**		...	...
		B71-6011	O|O	**85062**	**89408**		...	...
		B716011	O|O	**85062**	**89408**		...	...
87-01	Models with Air Trac Suspension (46,000 lb)	03-07421		...	...	–|O	**85311**	**89424**
		0307421		...	...	–|O	**85311**	**89424**
87-01	Models with Chalmers 40,000 lb Rear Suspension	665174		...	...	O|O	**85060**	...
		800670		...	...	O|O	**85060**	...
87-01	Models with Link Cabmate Models PBC379 & PBC379-A	1202-0054	O|O	**83021**				
		12020054	O|O	**83021**				
87-01	Models with Neway ARD 125/244-8 Models Rear Air Suspension	90044011		...	...	O|O	**85004**	...
87-01	Models with Peterbilt Low Air Leaf Suspension	03-07423		...	...	–|O	**85033**	**89427**
		0307423		...	...	–|O	**85033**	**89427**
		665633		...	...	–|O	**85033**	**89427**
99-01	Models with O.E.M. Number	29-02455	O|O	**83008**				

Year Ano Année	Model Modelo Modle	OEM #		Front			Rear	
				Fleetline	GasSLX		Fleetline	GasSLX
PETERBILT (CONT'D)								
377 (cont'd)								
99-01	Models with O.E.M. Number	2902455	o|o	**83008**				
		R71-6007	o|o	**83008**				
		R716007	o|o	**83008**				
378								
88-02	Models with Peterbilt Low Air Leaf Suspension	03-07423		...	...	–|o	**85033**	**89427**
		0307423		...	...	–|o	**85033**	**89427**
		665633		...	...	–|o	**85033**	**89427**
03-07	Models with Peterbilt Low Air Leaf Suspension	03-08781		...	...	–|–	**85069**	**89455**
		0308781		...	...	–|–	**85069**	**89455**
		C71-1017		...	...	–|–	**85069**	**89455**
		C711017		...	...	–|–	**85069**	**89455**
88-07	Conventional Models with Front Air Suspension and Set Back Front Axle.	02-02739	o|o	**85013**	**89414**		...	...
		0202739	o|o	**85013**	**89414**		...	...
88-07	Conventional Models with Front Air Suspension and without Set Back Front Axle.	02-02740	o|o	**85036**	**89405**		...	...
		0202740	o|o	**85036**	**89405**		...	...
88-07	Conventional Models with Spring Suspension and with Set Back Front Axle.	02-02738	o|o	**85012**	**89413**		...	...
		02-02741	o|o	**85012**	**89413**		...	...
		0202738	o|o	**85012**	**89413**		...	...
		0202741	o|o	**85012**	**89413**		...	...
		B71-6016	o|o	**85012**	**89413**		...	...
		B71-6016A	o|o	**85012**	**89413**		...	...
		B716016	o|o	**85012**	**89413**		...	...
		B716016A	o|o	**85012**	**89413**		...	...
88-07	Models with 12,000 lb to 14,600 lb Taperleaf Spring Suspension and Set Forward Front Axle.	02-01787	o|o	**85062**	**89408**		...	...
		02-02737	o|o	**85062**	**89408**		...	...
		0201787	o|o	**85062**	**89408**		...	...
		0202737	o|o	**85062**	**89408**		...	...
		B71-6007	o|o	**85062**	**89408**		...	...
		B71-6009	o|o	**85062**	**89408**		...	...
		B716007	o|o	**85062**	**89408**		...	...
		B716009	o|o	**85062**	**89408**		...	...
88-07	Models with 18,000 lb to 23,000 lb Taperleaf Front Spring Suspension and Set Forward Front Axle.	02-02742	o|o	**85062**	**89408**		...	...
		0202742	o|o	**85062**	**89408**		...	...
		B71-6011	o|o	**85062**	**89408**		...	...
		B716011	o|o	**85062**	**89408**		...	...
88-07	Models with Air Trac Suspension (46,000 lb)	03-07421		...	...	–|o	**85311**	**89424**
		0307421		...	...	–|o	**85311**	**89424**
88-07	Models with Chalmers 40,000 lb Rear Suspension	665174		...	...	o|o	**85060**	...
		800670		...	...	o|o	**85060**	...
88-07	Models with Link Cabmate Models PBC377 & PBC377-A	1202-0054	o|o	**83021**				
		12020054	o|o	**83021**				
88-07	Models with Neway ARD 125/244-8 Models Rear Air Suspension	90044011		...	...	o|o	**85004**	...
99-07	Models with FlexAir Suspension (38000 lb)	C71-1002		...	...	o|o	**85067**	**89451**
		C71-6000		...	...	o|o	**85067**	**89451**
		C711002		...	...	o|o	**85067**	**89451**
		C716000		...	...	o|o	**85067**	**89451**
379								
86-02	Models with Peterbilt Low Air Leaf Suspension	03-07423		...	...	–|o	**85033**	**89427**

PETERBILT (CONT'D)

379 (cont'd)

Year Ano Année	Model Modelo Modle	OEM #		Front			Rear	
				Fleetline	GasSLX		Fleetline	GasSLX
86-02	Models with Peterbilt Low Air Leaf Suspension	0307423		...	...	−|○	85033	89427
		665633		...	...	−|○	85033	89427
03-07	Models with Peterbilt Low Air Leaf Suspension	03-08781		...	...	−|−	85069	89455
		0308781		...	...	−|−	85069	89455
		C71-1011		...	...	−|−	85069	89455
		C71-1017		...	...	−|−	85069	89455
		C711011		...	...	−|−	85069	89455
		C711017		...	...	−|−	85069	89455
86-07	Conventional Models with Front Air Suspension and Set Back Front Axle.	02-02739	○|○	85013	89414		...	...
		0202739	○|○	85013	89414		...	...
86-07	Conventional Models with Front Air Suspension and without Set Back Front Axle.	02-02740	○|○	85036	89405		...	...
		0202740	○|○	85036	89405		...	...
86-07	Conventional Models with Spring Suspension and with Set Back Front Axle.	02-01890	○|○	85012	89413		...	...
		02-02738	○|○	85012	89413		...	...
		02-02741	○|○	85012	89413		...	...
		0201890	○|○	85012	89413		...	...
		0202738	○|○	85012	89413		...	...
		0202741	○|○	85012	89413		...	...
		B71-6016	○|○	85012	89413		...	...
		B71-6016A	○|○	85012	89413		...	...
		B716016	○|○	85012	89413		...	...
		B716016A	○|○	85012	89413		...	...
86-07	Models with 12,000 lb to 14,600 lb Taperleaf Spring Suspension and Set Forward Front Axle.	02-01787	○|○	85062	89408		...	...
		02-02737	○|○	85062	89408		...	...
		0201787	○|○	85062	89408		...	...
		0202737	○|○	85062	89408		...	...
		B71-6007	○|○	85062	89408		...	...
		B71-6009	○|○	85062	89408		...	...
		B716007	○|○	85062	89408		...	...
		B716009	○|○	85062	89408		...	...
86-07	Models with 18,000 lb to 23,000 lb Taperleaf Front Spring Suspension and Set Forward Front Axle.	02-02742	○|○	85062	89408		...	...
		0202742	○|○	85062	89408		...	...
		B71-6011	○|○	85062	89408		...	...
		B716011	○|○	85062	89408		...	...
86-07	Models with Air Trac Suspension (46,000 lb)	03-07421		...	...	−|○	85311	89424
		03-07421SPL		...	...	−|○	85311	89424
		0307421		...	...	−|○	85311	89424
		0307421SPL		...	...	−|○	85311	89424
86-07	Models with Chalmers 40,000 lb Rear Suspension	665174		...	...	○|○	85060	...
		800670		...	...	○|○	85060	...
86-07	Models with Link Cabmate Models PBC379 & PBC379-A	1202-0054	○|○	83021				
		12020054	○|○	83021				
99-07	Models with FlexAir Suspension (38000 lb)	C71-1002		...	...	○|○	85067	89451
		C71-6000		...	...	○|○	85067	89451
		C711002		...	...	○|○	85067	89451
		C716000		...	...	○|○	85067	89451
99-07	Models with O.E.M. Number	29-02455	○|○	83008				
		2902455	○|○	83008				
		R71-6007	○|○	83008				
		R716007	○|○	83008				

382

11-17	Models with 10,000 lb to 12,000 lb Front Axle	B71-6005	○|○	85084	89460		...	...

Year Ano Année	Model Modelo Modle	OEM #		Front			Rear	
				Fleetline	GasSLX		Fleetline	GasSLX

PETERBILT (CONT'D)

382 (cont'd)

11-17	Models with 10,000 lb to 12,000 lb Front Axle	B716005	O|O	**85084**	**89460**		...	...
11-17	Models with 12,000 lb to 14,600 lb Taperleaf Spring Suspension and Set Forward Front Axle.	02-02737	O|O	**85062**	**89408**		...	...
		0202737	O|O	**85062**	**89408**		...	...
		B71-6009	O|O	**85062**	**89408**		...	...
		B716009	O|O	**85062**	**89408**		...	...
11-17	Models with Air Trac Suspension (46,000 lb)	03-07421		...	...	–|O	**85311**	**89424**
		0307421		...	...	–|O	**85311**	**89424**
		C71-6002		...	...	–|O	**85311**	**89424**
		C716002		...	...	–|O	**85311**	**89424**
11-17	Models with FlexAir Suspension (38000 lb)	C71-1002		...	...	O|O	**85067**	**89451**
		C71-1016		...	...	O|O	**85067**	**89451**
		C71-6000		...	...	O|O	**85067**	**89451**
		C71-6015		...	...	O|O	**85067**	**89451**
		C711002		...	...	O|O	**85067**	**89451**
		C711016		...	...	O|O	**85067**	**89451**
		C716000		...	...	O|O	**85067**	**89451**
		C716015		...	...	O|O	**85067**	**89451**
11-17	Models with Peterbilt Low Air Leaf Suspension	03-08781		...	...	–|–	**85069**	**89455**
		0308781		...	...	–|–	**85069**	**89455**
		C71-1011		...	...	–|–	**85069**	**89455**
		C71-1017		...	...	–|–	**85069**	**89455**
		C711011		...	...	–|–	**85069**	**89455**
		C711017		...	...	–|–	**85069**	**89455**
11-17	Models with Reyco 79KB Rear Steel Spring Suspension	16725-01		...	...	O|O	**83126**	**89430**
		19495-01		...	...	O|O	**83126**	**89430**
		1672501		...	...	O|O	**83126**	**89430**
		1949501		...	...	O|O	**83126**	**89430**
		TK19679		...	...	O|O	**83126**	**89430**
11-17	Models with Reyco 102AR (Standard) Rear Air Suspension	12887-01		...	...	O|O	**85013**	**89414**
		12887-02		...	...	O|O	**85013**	**89414**
		1288701		...	...	O|O	**85013**	**89414**
		1288702		...	...	O|O	**85013**	**89414**

384

08-12	Models with 12,000 lb to 14,600 lb Taperleaf Spring Suspension and Set Forward Front Axle.	02-02737	O|O	**85062**	**89408**		...	...
		0202737	O|O	**85062**	**89408**		...	...
08-16	Conventional Day Cab with O.E.M. Number	20-16755	O|O	**83042**				
		2016755	O|O	**83042**				
		R71-6005	O|O	**83042**				
		R716005	O|O	**83042**				
08-16	Models with Air Trac Suspension (46,000 lb)	03-07421		...	...	–|O	**85311**	**89424**
		0307421		...	...	–|O	**85311**	**89424**
		C71-6002		...	...	–|O	**85311**	**89424**
		C716002		...	...	–|O	**85311**	**89424**
08-16	Models with FlexAir Suspension (38000 lb)	C71-1002		...	...	O|O	**85067**	**89451**
		C71-1016		...	...	O|O	**85067**	**89451**
		C71-6000		...	...	O|O	**85067**	**89451**
		C71-6015		...	...	O|O	**85067**	**89451**
		C711002		...	...	O|O	**85067**	**89451**
		C711016		...	...	O|O	**85067**	**89451**
		C716000		...	...	O|O	**85067**	**89451**
		C716015		...	...	O|O	**85067**	**89451**
08-16	Models with Peterbilt Low Air Leaf Suspension	03-08781		...	...	–|–	**85069**	**89455**

Year Ano Année	Model Modelo Modle	OEM #		Front			Rear	
				Fleetline	GasSLX		Fleetline	GasSLX
PETERBILT (CONT'D)								
384 (cont'd)								
08-16	Models with Peterbilt Low Air Leaf Suspension	0308781		...	...	–|–	85069	89455
		C71-1011		...	...	–|–	85069	89455
		C71-1017		...	...	–|–	85069	89455
		C711011		...	...	–|–	85069	89455
		C711017		...	...	–|–	85069	89455
13-16	Models with 12,000 lb to 14,600 lb Taperleaf Spring Suspension and Set Forward Front Axle. (Heavy Duty)	B71-6009	O|O	85062	89408		...	...
		B716009	O|O	85062	89408		...	...
13-16	Models with 12,000 lb to 14,600 lb Taperleaf Spring Suspension and Set Forward Front Axle. (Std Duty)	B71-6009	O|O	83219	...		...	...
		B716009	O|O	83219	...		...	...
385								
95-02	Models with Peterbilt Low Air Leaf Suspension	03-07423		...	...	–|O	85033	89427
		0307423		...	...	–|O	85033	89427
		665633		...	...	–|O	85033	89427
04-07	Models with Peterbilt Low Air Leaf Suspension	03-08781		...	...	–|–	85069	89455
		0308781		...	...	–|–	85069	89455
		C71-1017		...	...	–|–	85069	89455
		C711017		...	...	–|–	85069	89455
95-07	Conventional Models with Spring Suspension and with Set Back Front Axle.	02-02738	O|O	85012	89413		...	...
		02-02741	O|O	85012	89413		...	...
		0202738	O|O	85012	89413		...	...
		0202741	O|O	85012	89413		...	...
		B71-6016	O|O	85012	89413		...	...
		B71-6016A	O|O	85012	89413		...	...
		B716016	O|O	85012	89413		...	...
		B716016A	O|O	85012	89413		...	...
95-07	Models with Air Trac Suspension (46,000 lb)	03-07421		...	...	–|O	85311	89424
		0307421		...	...	–|O	85311	89424
95-07	Models with FlexAir Suspension (38000 lb)	C71-1002		...	...	O|O	85067	89451
		C71-6000		...	...	O|O	85067	89451
		C711002		...	...	O|O	85067	89451
		C716000		...	...	O|O	85067	89451
386								
06-16	386 Models with Sleepers	29-02455	O|O	83008				
		2902455	O|O	83008				
		R71-6007	O|O	83008				
		R716007	O|O	83008				
06-16	Conventional Day Cab with O.E.M. Number	20-16755	O|O	83042				
		2016755	O|O	83042				
		R71-6005	O|O	83042				
		R716005	O|O	83042				
06-16	Conventional Models with Front Air Suspension and Set Back Front Axle.	02-02739	O|O	85013	89414		...	...
		0202739	O|O	85013	89414		...	...
06-16	Conventional Models with Front Air Suspension and without Set Back Front Axle.	02-02740	O|O	85036	89405		...	...
		0202740	O|O	85036	89405		...	...
06-16	Conventional Models with Spring Suspension and with Set Back Front Axle.	02-02738	O|O	85012	89413		...	...
		02-02741	O|O	85012	89413		...	...
		02-04010	O|O	85012	89413		...	...
		0202738	O|O	85012	89413		...	...
		0202741	O|O	85012	89413		...	...
		0204010	O|O	85012	89413		...	...

Year Ano Année	Model Modelo Modle	OEM #		Front			Rear	
				Fleetline	GasSLX		Fleetline	GasSLX
PETERBILT (CONT'D)								
386 (cont'd)								
06-16	Conventional Models with Spring Suspension and with Set Back Front Axle.	B71-6016	O|O	**85012**	89413		...	...
		B71-6016A	O|O	**85012**	89413		...	...
		B71-6018	O|O	**85012**	89413		...	...
		B716016	O|O	**85012**	89413		...	...
		B716016A	O|O	**85012**	89413		...	...
		B716018	O|O	**85012**	89413		...	...
06-16	Models with 12,000 lb to 14,600 lb Taperleaf Spring Suspension and Set Forward Front Axle.	02-02737	O|O	**85062**	89408		...	...
		0202737	O|O	**85062**	89408		...	...
		B71-6007	O|O	**85062**	89408		...	...
		B71-6009	O|O	**85062**	89408		...	...
		B716007	O|O	**85062**	89408		...	...
		B716009	O|O	**85062**	89408		...	...
06-16	Models with 18,000 lb to 23,000 lb Taperleaf Front Spring Suspension and Set Forward Front Axle.	02-02742	O|O	**85062**	89408		...	...
		0202742	O|O	**85062**	89408		...	...
		B71-6011	O|O	**85062**	89408		...	...
		B716011	O|O	**85062**	89408		...	...
06-16	Models with Air Trac Suspension (46,000 lb)	03-07421		...	...	–|O	**85311**	89424
		0307421		...	...	–|O	**85311**	89424
06-16	Models with FlexAir Suspension (38000 lb)	C71-1002		...	...	O|O	**85067**	89451
		C71-1016		...	...	O|O	**85067**	89451
		C71-6000		...	...	O|O	**85067**	89451
		C71-6015		...	...	O|O	**85067**	89451
		C711002		...	...	O|O	**85067**	89451
		C711016		...	...	O|O	**85067**	89451
		C716000		...	...	O|O	**85067**	89451
		C716015		...	...	O|O	**85067**	89451
06-16	Models with Peterbilt Air Leaf Suspension	03-07421		...	...	–|O	**85311**	89424
		0307421		...	...	–|O	**85311**	89424
		C71-6002		...	...	–|O	**85311**	89424
		C716002		...	...	–|O	**85311**	89424
06-16	Models with Peterbilt Low Air Leaf Suspension	03-08781		...	...	–|–	**85069**	89455
		0308781		...	...	–|–	**85069**	89455
		C71-1011		...	...	–|–	**85069**	89455
		C71-1017		...	...	–|–	**85069**	89455
		C711011		...	...	–|–	**85069**	89455
		C711017		...	...	–|–	**85069**	89455
13-16	Models with Air Trac Suspension (40,000 lb)	C71-6003		...	...	–|O	**85988**	...
		C716003		...	...	–|O	**85988**	...
387								
00-02	Models with Peterbilt Low Air Leaf Suspension	03-07423		...	...	–|O	**85033**	89427
		0307423		...	...	–|O	**85033**	89427
		665633		...	...	–|O	**85033**	89427
00-11	387 Models with 70" Sleepers	29-06005	O|O	**83035**				
		29-06032	O|O	**83035**				
		2906005	O|O	**83035**				
		2906032	O|O	**83035**				
		R71-6008	O|O	**83035**				
		R716008	O|O	**83035**				
00-11	Conventional Models with Front Air Suspension and Set Back Front Axle.	02-02739	O|O	**85013**	89414		...	...
		0202739	O|O	**85013**	89414		...	...
00-11	Conventional Models with Front Air Suspension and without Set Back Front Axle.	02-02740	O|O	**85036**	89405		...	...

Year Ano Année	Model Modelo Modle	OEM #		Front			Rear	
				Fleetline	GasSLX		Fleetline	GasSLX
PETERBILT (CONT'D)								
387 (cont'd)								
00-11	Conventional Models with Front Air Suspension and without Set Back Front Axle.	0202740	O|O	**85036**	**89405**		...	...
00-11	Conventional Models with Spring Suspension and with Set Back Front Axle.	02-02738	O|O	**85012**	**89413**		...	...
		02-02741	O|O	**85012**	**89413**		...	...
		02-04010	O|O	**85012**	**89413**		...	...
		0202738	O|O	**85012**	**89413**		...	...
		0202741	O|O	**85012**	**89413**		...	...
		0204010	O|O	**85012**	**89413**		...	...
		B71-6016	O|O	**85012**	**89413**		...	...
		B71-6016A	O|O	**85012**	**89413**		...	...
		B71-6018	O|O	**85012**	**89413**		...	...
		B716016	O|O	**85012**	**89413**		...	...
		B716016A	O|O	**85012**	**89413**		...	...
		B716018	O|O	**85012**	**89413**		...	...
00-11	Models with FlexAir Suspension (38000 lb)	C71-1002		...	...	O|O	**85067**	**89451**
		C71-6000		...	...	O|O	**85067**	**89451**
		C711002		...	...	O|O	**85067**	**89451**
		C716000		...	...	O|O	**85067**	**89451**
00-11	Models with Peterbilt Air Leaf Suspension	03-07421		...	...	-|O	**85311**	**89424**
		0307421		...	...	-|O	**85311**	**89424**
03-11	Models with Peterbilt Low Air Leaf Suspension	03-08781		...	...	-|-	**85069**	**89455**
		0308781		...	...	-|-	**85069**	**89455**
		C71-1011		...	...	-|-	**85069**	**89455**
		C71-1017		...	...	-|-	**85069**	**89455**
		C711011		...	...	-|-	**85069**	**89455**
		C711017		...	...	-|-	**85069**	**89455**
388								
08-15	388 Models with 70" Sleepers	29-02455	O|O	**83008**				
		2902455	O|O	**83008**				
		R71-6007	O|O	**83008**				
		R716007	O|O	**83008**				
08-15	Conventional Day Cab with O.E.M. Number	20-16755	O|O	**83042**				
		2016755	O|O	**83042**				
		R71-6005	O|O	**83042**				
		R716005	O|O	**83042**				
08-15	Conventional Models with Front Air Suspension and Set Back Front Axle.	02-02739	O|O	**85013**	**89414**		...	...
		85013A0C	O|O	**85013**	**89414**		...	...
		0202739	O|O	**85013**	**89414**		...	...
08-15	Conventional Models with Front Air Suspension and without Set Back Front Axle.	02-02740	O|O	**85036**	**89405**		...	...
		0202740	O|O	**85036**	**89405**		...	...
08-15	Conventional Models with Spring Suspension and with Set Back Front Axle.	02-04010	O|O	**85012**	**89413**		...	...
		0204010	O|O	**85012**	**89413**		...	...
		B71-6018	O|O	**85012**	**89413**		...	...
		B716018	O|O	**85012**	**89413**		...	...
08-15	Models with 12,000 lb to 14,600 lb Taperleaf Spring Suspension and Set Forward Front Axle.	B71-6007	O|O	**85062**	**89408**		...	...
		B716007	O|O	**85062**	**89408**		...	...
08-15	Models with 18,000 lb to 23,000 lb Taperleaf Front Spring Suspension and Set Forward Front Axle.	02-02742	O|O	**85062**	**89408**		...	...
		0202742	O|O	**85062**	**89408**		...	...
		B71-6011	O|O	**85062**	**89408**		...	...
		B716011	O|O	**85062**	**89408**		...	...
08-15	Models with Air Trac Suspension (46,000 lb)	03-07421		...	...	-|O	**85311**	**89424**

Year Ano Année	Model Modelo Modle	OEM #		Front			Rear	
				Fleetline	GasSLX		Fleetline	GasSLX
PETERBILT (CONT'D)								
388 (cont'd)								
08-15	Models with Air Trac Suspension (46,000 lb)	0307421		...	...	−|O	85311	89424
		C71-6002		...	...	−|O	85311	89424
		C716002		...	...	−|O	85311	89424
08-15	Models with FlexAir Suspension (38000 lb)	C71-1002		...	...	O|O	85067	89451
		C71-1016		...	...	O|O	85067	89451
		C71-6000		...	...	O|O	85067	89451
		C71-6015		...	...	O|O	85067	89451
		C711002		...	...	O|O	85067	89451
		C711016		...	...	O|O	85067	89451
		C716000		...	...	O|O	85067	89451
		C716015		...	...	O|O	85067	89451
08-15	Models with Hendrickson HMX 400/460 Haulmax with 16.5" Saddle	60680-004		...	...		83143	...
		60680-004L		...	...		83143	...
		60680004		...	...		83143	...
		60680004L		...	...		83143	...
08-15	Models with Hendrickson HMX 400/460 Haulmax with 17.5" & 18.5" Saddle	60680-005		...	...		83142	...
		60680-005L		...	...		83142	...
		60680005		...	...		83142	...
		60680005L		...	...		83142	...
08-15	Models with Peterbilt Air Leaf Suspension	03-07421		...	...	−|O	85311	89424
		03-07421PLUS		...	...	−|O	85311	89424
		0307421		...	...	−|O	85311	89424
		0307421PLUS		...	...	−|O	85311	89424
08-15	Models with Peterbilt Low Air Leaf Suspension	03-08781		...	...	−|−	85069	89455
		0308781		...	...	−|−	85069	89455
		C71-1011		...	...	−|−	85069	89455
		C71-1017		...	...	−|−	85069	89455
		C711011		...	...	−|−	85069	89455
		C711017		...	...	−|−	85069	89455
13-15	Models with 12,000 lb to 14,600 lb Taperleaf Spring Suspension and Set Forward Front Axle. (Heavy Duty)	B71-6009	O|O	85062	89408		...	...
		B716009	O|O	85062	89408		...	...
13-15	Models with 12,000 lb to 14,600 lb Taperleaf Spring Suspension and Set Forward Front Axle. (Std Duty)	B71-6009	O|O	83219	...		...	...
		B716009	O|O	83219	...		...	...
14-15	Models with Air Trac Suspension (40,000 lb)	C71-6003		...	...	−|O	85988	...
		C716003		...	...	−|O	85988	...
389								
08-13	Models with Peterbilt Air Leaf Suspension	03-07421		...	...	−|O	85311	89424
		0307421		...	...	−|O	85311	89424
08-19	Models with Hendrickson HN - 522 Rear Suspension	60680-003		...	...		83112	...
		60680-003L		...	...		83112	...
		60680003		...	...		83112	...
		60680003L		...	...		83112	...
08-20	Conventional Day Cab with O.E.M. Number	20-16755	O|O	83042				
		2016755	O|O	83042				
		R71-6005	O|O	83042				
		R716005	O|O	83042				
08-21	Conventional Models with Front Air Suspension and without Set Back Front Axle.	02-02740	O|O	85036	89405		...	...
		0202740	O|O	85036	89405		...	...
08-21	Conventional Models with Spring Suspension and with Set Back Front Axle.	02-04010	O|O	85012	89413		...	...
		0204010	O|O	85012	89413		...	...
		B71-6013	O|O	85012	89413		...	...

PETERBILT (CONT'D)

389 (cont'd)

Year Ano Année	Model Modelo Modle	OEM #		Front			Rear	
				Fleetline	GasSLX		Fleetline	GasSLX
08-21	Conventional Models with Spring Suspension and with Set Back Front Axle.	B71-6018	O|O	85012	89413		...	...
		B716013	O|O	85012	89413		...	...
		B716018	O|O	85012	89413		...	...
08-21	Models with FlexAir Suspension (38000 lb)	C71-1002		...	...	O|O	85067	89451
		C71-1016		...	...	O|O	85067	89451
		C71-6000		...	...	O|O	85067	89451
		C71-6015		...	...	O|O	85067	89451
		C711002		...	...	O|O	85067	89451
		C711016		...	...	O|O	85067	89451
		C716000		...	...	O|O	85067	89451
		C716015		...	...	O|O	85067	89451
15-21	Models with O.E.M. Number	B71-6012	O|O	85119	...		...	...
		B716012	O|O	85119	...		...	...
08-22	Conventional Models with Front Air Suspension and Set Back Front Axle.	02-02739	O|O	85013	89414		...	...
		0202739	O|O	85013	89414		...	...
14-22	Models with Air Trac Suspension (40,000 lb)	C71-6003		...	...	–|O	85988	...
		C716003		...	...	–|O	85988	...
08-23	389 Models with 52" , 72", and 78" Sleepers	29-02455	O|O	83008				
		2902455	O|O	83008				
		R71-6007	O|O	83008				
		R716007	O|O	83008				
08-23	Models with 12,000 lb to 14,600 lb Taperleaf Spring Suspension and Set Forward Front Axle.	02-02737	O|O	85062	89408		...	...
		0202737	O|O	85062	89408		...	...
		B71-6007	O|O	85062	89408		...	...
		B71-6009	O|O	85062	89408		...	...
		B716007	O|O	85062	89408		...	...
		B716009	O|O	85062	89408		...	...
08-23	Models with 18,000 lb to 23,000 lb Taperleaf Front Spring Suspension and Set Forward Front Axle.	02-02742	O|O	85062	89408		...	...
		0202742	O|O	85062	89408		...	...
		B71-6011	O|O	85062	89408		...	...
		B716011	O|O	85062	89408		...	...
08-23	Models with Hendrickson HMX 400/460 Haulmax with 16.5" Saddle	60680-004		...	...		83143	...
		60680-004L		...	...		83143	...
		60680004		...	...		83143	...
		60680004L		...	...		83143	...
08-23	Models with Hendrickson HMX 400/460 Haulmax with 17.5" & 18.5" Saddle	60680-005		...	...		83142	...
		60680-005L		...	...		83142	...
		60680005		...	...		83142	...
		60680005L		...	...		83142	...
08-23	Models with Peterbilt Low Air Leaf Suspension	03-08781		...	...	–|–	85069	89455
		0308781		...	...	–|–	85069	89455
		C71-1011		...	...	–|–	85069	89455
		C71-1017		...	...	–|–	85069	89455
		C711011		...	...	–|–	85069	89455
		C711017		...	...	–|–	85069	89455
14-23	Models with Air Trac Suspension (46,000 lb)	C71-6002		...	...	–|O	85311	89424
		C716002		...	...	–|O	85311	89424
14-23	Models with Neway ADZ Rear Suspension	90045605		...	...	O|O	85109	...
		90045803		...	...	O|O	85109	...
		90045812		...	...	O|O	85109	...
		471700004423		...	...	O|O	85109	...
		471700013186		...	...	O|O	85109	...

Year Ano Année	Model Modelo Modle	OEM #		Front			Rear	
				Fleetline	GasSLX		Fleetline	GasSLX
PETERBILT (CONT'D)								
520								
17-19	Models with Neway AD-252-10 Tandem Axle	90045132		...	...	O|O	85909	...
17-22	Models with Air Trac Suspension (40,000 lb)	C71-6003		...	...	–|O	85988	...
		C716003		...	...	–|O	85988	...
17-22	Models with Hendrickson HMX 400/460 Haulmax with 16.5" Saddle	60680-004		...	...		83143	...
		60680-004L		...	...		83143	...
		60680004		...	...		83143	...
		60680004L		...	...		83143	...
17-22	Models with Reyco 79KB Rear Steel Spring Suspension	16725-01		...	...	O|O	83126	89430
		19495-01		...	...	O|O	83126	89430
		1672501		...	...	O|O	83126	89430
		1949501		...	...	O|O	83126	89430
		TK19679		...	...	O|O	83126	89430
17-22	Models with Reyco 102AR (Standard) Rear Air Suspension	12887-01		...	...	O|O	85013	89414
		12887-02		...	...	O|O	85013	89414
		1288701		...	...	O|O	85013	89414
		1288702		...	...	O|O	85013	89414
17-23	Models with 18,000 lb to 23,000 lb Taperleaf Front Spring Suspension and Set Forward Front Axle.	B71-6011	O|O	85062	89408		...	...
		B716011	O|O	85062	89408		...	...
17-23	Models with Air Trac Suspension (46,000 lb)	C71-6002		...	...	–|O	85311	89424
		C716002		...	...	–|O	85311	89424
17-23	Models with Hendrickson HMX 400/460 Haulmax with 17.5" & 18.5" Saddle	60680-005		...	...		83142	...
		60680-005L		...	...		83142	...
		60680005		...	...		83142	...
		60680005L		...	...		83142	...
17-23	Models with Neway ADZ Rear Suspension	90045605		...	...	O|O	85109	...
		90045803		...	...	O|O	85109	...
		90045812		...	...	O|O	85109	...
		471700004423		...	...	O|O	85109	...
		471700013186		...	...	O|O	85109	...
17-23	Models with Peterbilt Low Air Leaf Suspension	C71-1011		...	...	–|–	85069	89455
		C71-1017		...	...	–|–	85069	89455
		C711011		...	...	–|–	85069	89455
		C711017		...	...	–|–	85069	89455
536								
22-23	Models with 10,000 lb to 14,600 lb Taperleaf Springs and Set Back Front Axles	B71-6019	O|O	85989	...		...	...
		B716019	O|O	85989	...		...	...
22-23	Models with Peterbilt Low Air Leaf Suspension	C71-1017		...	...	–|–	85069	89455
		C711017		...	...	–|–	85069	89455
537								
22-23	Models with 10,000 lb to 14,600 lb Taperleaf Springs and Set Back Front Axles	B71-6019	O|O	85989	...		...	...
		B716019	O|O	85989	...		...	...
2022	Models with 16,000 lb to 20,000 lb Taperleaf Springs and Set Back Front Axles	B71-6020	O|O	85989	...		...	...
		B716020	O|O	85989	...		...	...
2022	Models with Peterbilt Low Air Leaf Suspension	C711017		...	...	–|–	85069	89455
2022	Models with Reyco 102 or 79KB Suspension (Drive Axle)	16725-01		...	...	O|O	83126	89430
		19495-01		...	...	O|O	83126	89430
		1672501		...	...	O|O	83126	89430
		1949501		...	...	O|O	83126	89430
		TK19679		...	...	O|O	83126	89430

APPLICATION GUIDE - TRUCKS, TRAILERS AND BUSES

Year Ano Année	Model Modelo Modle	OEM #		Front			Rear	
				Fleetline	GasSLX		Fleetline	GasSLX
PETERBILT (CONT'D)								
2023	Models with Peterbilt Low Air Leaf Suspension	C71-1017		...	...	–|–	85069	89455
548								
22-23	Models with 10,000 lb to 14,600 lb Taperleaf Springs and Set Back Front Axles	B71-6019	O|O	85989	...		...	...
		B716019	O|O	85989	...		...	...
22-23	Models with Air Trac Suspension (40,000 lb)	C71-6003		...	...	–|O	85988	...
		C716003		...	...	–|O	85988	...
567								
14-19	Models with Chalmers 40,000 lb Rear Suspension	665174		...	...	O|O	85060	...
		800670		...	...	O|O	85060	...
14-20	Models with Watson & Chalin SL Series Steerable Lift Axle (8,000 to 13,500 lb)	11418		...	...	O|O	646177	...
		11418WAC		...	...	O|O	646177	...
14-21	Models with 12,000 lb to 14,600 lb Taperleaf Spring Suspension and Set Forward Front Axle.	B71-6009	O|O	85062	89408		...	...
		B716009	O|O	85062	89408		...	...
14-21	Models with FlexAir Suspension (38000 lb)	C71-1016		...	...	O|O	85067	89451
		C71-6015		...	...	O|O	85067	89451
		C711016		...	...	O|O	85067	89451
		C716015		...	...	O|O	85067	89451
16-21	Sleeper Cab models with O.E.M. Number (Shocks only)	1201-8006	O|O	83081				
		12018006	O|O	83081				
		25523024	O|O	83081				
14-22	Models with Air Trac Suspension (40,000 lb)	C71-6003		...	...	–|O	85988	...
		C716003		...	...	–|O	85988	...
14-23	Models with 10,000 lb to 14,600 lb Taperleaf Springs and Set Back Front Axles	B71-6019	O|O	85989	...		...	...
		B716019	O|O	85989	...		...	...
14-23	Models with 18,000 lb to 23,000 lb Taperleaf Front Spring Suspension and Set Forward Front Axle.	B71-6011	O|O	85062	89408		...	...
		B716011	O|O	85062	89408		...	...
14-23	Models with 20,000 lb Taperleaf Springs and Set Back Front Axles	B71-6020	O|O	85989	...		...	...
		B716020	O|O	85989	...		...	...
14-23	Models with Air Trac Suspension (46,000 lb)	C71-6002		...	...	–|O	85311	89424
		C716002		...	...	–|O	85311	89424
14-23	Models with Hendrickson HMX 400/460 Haulmax with 16.5" Saddle	60680-004		...	...		83143	...
		60680-004L		...	...		83143	...
		60680004		...	...		83143	...
		60680004L		...	...		83143	...
14-23	Models with Hendrickson HMX 400/460 Haulmax with 17.5" & 18.5" Saddle	60680-005		...	...		83142	...
		60680-005L		...	...		83142	...
		60680005		...	...		83142	...
		60680005L		...	...		83142	...
14-23	Models with Neway ADZ Rear Suspension	90045605		...	...	O|O	85109	...
		90045803		...	...	O|O	85109	...
		90045812		...	...	O|O	85109	...
		471700004423		...	...	O|O	85109	...
		471700013186		...	...	O|O	85109	...
14-23	Models with Peterbilt Low Air Leaf Suspension	C71-1017		...	...	–|–	85069	89455
		C71-6005		...	...	–|–	85069	89455
		C711017		...	...	–|–	85069	89455
		C716005		...	...	–|–	85069	89455
16-23	Day Cab Models with O.E.M. Number	1201-8001	O|O	83908				
		12018001	O|O	83908				
		25523002	O|O	83908				
22-23	Models with Air Track Tandem with TRD8000 Pusher Axle	C71-6004		...	...	–|O	85343	...

PETERBILT (CONT'D)

567 (cont'd)

Year Ano Année	Model Modelo Modle	OEM #		Front Fleetline	Front GasSLX		Rear Fleetline	Rear GasSLX
22-23	Models with Air Track Tandem with TRD8000 Pusher Axle	C716004		...	...	−|○	85343	...

579

13-16	Day Cab Models with 10,000 lb to 12,000 lb Front Axle	B71-6005	○|○	85084	89460		...	...
		B716005	○|○	85084	89460		...	...
13-18	Models with 12,000 lb to 14,600 lb Taperleaf Spring Suspension and Set Forward Front Axle.	02-02737	○|○	85062	89408		...	...
		0202737	○|○	85062	89408		...	...
		B71-6009	○|○	85062	89408		...	...
		B716009	○|○	85062	89408		...	...
13-21	Models with Peterbilt Front Air Leaf Suspension	B71-6000	○|○	85959	...		...	...
		B716000	○|○	85959	...		...	...
13-22	Models with O.E.M. Number	B71-6012	○|○	85119	...		...	...
		B716012	○|○	85119	...		...	...
13-22	Models with Reyco 79KB Rear Steel Spring Suspension	16725-01		...	...	○|○	83126	89430
		19495-01		...	...	○|○	83126	89430
		1672501		...	...	○|○	83126	89430
		1949501		...	...	○|○	83126	89430
		TK19679		...	...	○|○	83126	89430
13-22	Models with Reyco 102AR (Standard) Rear Air Suspension	12887-01		...	...	○|○	85013	89414
		12887-02		...	...	○|○	85013	89414
		1288701		...	...	○|○	85013	89414
		1288702		...	...	○|○	85013	89414
14-22	Models with Air Trac Suspension (40,000 lb)	C71-6003		...	...	−|○	85988	...
		C716003		...	...	−|○	85988	...
13-23	Models with 10,000 lb to 14,600 lb Taperleaf Springs and Set Back Front Axles	B71-6019	○|○	85989	...		...	...
		B716019	○|○	85989	...		...	...
13-23	Models with Air Trac Suspension (46,000 lb)	03-07421		...	...	−|○	85311	89424
		0307421		...	...	−|○	85311	89424
		C71-6002		...	...	−|○	85311	89424
		C716002		...	...	−|○	85311	89424
13-23	Models with FlexAir Suspension (38000 lb)	C71-1002		...	...	○|○	85067	89451
		C71-1016		...	...	○|○	85067	89451
		C71-6000		...	...	○|○	85067	89451
		C71-6015		...	...	○|○	85067	89451
		C711002		...	...	○|○	85067	89451
		C711016		...	...	○|○	85067	89451
		C716000		...	...	○|○	85067	89451
		C716015		...	...	○|○	85067	89451
13-23	Models with Neway ADZ Rear Suspension	90045605		...	...	○|○	85109	...
		90045803		...	...	○|○	85109	...
		90045812		...	...	○|○	85109	...
		471700004423		...	...	○|○	85109	...
		471700013186		...	...	○|○	85109	...
13-23	Models with Peterbilt Low Air Leaf Suspension	03-08781		...	...	−|−	85069	89455
		0308781		...	...	−|−	85069	89455
		C71-1011		...	...	−|−	85069	89455
		C71-1017		...	...	−|−	85069	89455
		C71-6005		...	...	−|−	85069	89455
		C711011		...	...	−|−	85069	89455
		C711017		...	...	−|−	85069	89455
		C716005		...	...	−|−	85069	89455
16-23	Day Cab Models with O.E.M. Number	1201-8001	○|○	83908				
		12018001	○|○	83908				

Year Ano Année	Model Modelo Modle	OEM #		Front			Rear	
				Fleetline	GasSLX		Fleetline	GasSLX
PETERBILT (CONT'D)								
579 (cont'd)								
16-23	Day Cab Models with O.E.M. Number	25523002	O|O	**83908**				
16-23	Sleeper Cab models with O.E.M. Number (Shocks only)	1201-8006	O|O	**83081**				
		12018006	O|O	**83081**				
		25523024	O|O	**83081**				
587								
11-13	Models with Peterbilt Front Air Leaf Suspension	B71-6000	O|O	**85959**	...		...	...
		B716000	O|O	**85959**	...		...	...
11-16	587 Models with 70" Sleepers	29-06032	O|O	**83035**				
		2906032	O|O	**83035**				
		R71-6008	O|O	**83035**				
		R716008	O|O	**83035**				
11-16	Models with 12,000 lb to 14,600 lb Taperleaf Spring Suspension and Set Forward Front Axle.	02-02737	O|O	**85062**	**89408**		...	...
		0202737	O|O	**85062**	**89408**		...	...
		B71-6009	O|O	**85062**	**89408**		...	...
		B716009	O|O	**85062**	**89408**		...	...
11-18	Models with Air Trac Suspension (46,000 lb)	03-07421		...	...	–|O	**85311**	**89424**
		0307421		...	...	–|O	**85311**	**89424**
		C71-6002		...	...	–|O	**85311**	**89424**
		C716002		...	...	–|O	**85311**	**89424**
11-18	Models with FlexAir Suspension (38000 lb)	C71-1002		...	...	O|O	**85067**	**89451**
		C71-1016		...	...	O|O	**85067**	**89451**
		C71-6000		...	...	O|O	**85067**	**89451**
		C71-6015		...	...	O|O	**85067**	**89451**
		C711002		...	...	O|O	**85067**	**89451**
		C711016		...	...	O|O	**85067**	**89451**
		C716000		...	...	O|O	**85067**	**89451**
		C716015		...	...	O|O	**85067**	**89451**
11-18	Models with Peterbilt Low Air Leaf Suspension	03-08781		...	...	–|–	**85069**	**89455**
		0308781		...	...	–|–	**85069**	**89455**
		C71-1011		...	...	–|–	**85069**	**89455**
		C71-1017		...	...	–|–	**85069**	**89455**
		C711011		...	...	–|–	**85069**	**89455**
		C711017		...	...	–|–	**85069**	**89455**
11-18	Models with Reyco 79KB Rear Steel Spring Suspension	16725-01		...	...	O|O	**83126**	**89430**
		19495-01		...	...	O|O	**83126**	**89430**
		1672501		...	...	O|O	**83126**	**89430**
		1949501		...	...	O|O	**83126**	**89430**
		TK19679		...	...	O|O	**83126**	**89430**
11-18	Models with Reyco 102AR (Standard) Rear Air Suspension	12887-01		...	...	O|O	**85013**	**89414**
		12887-02		...	...	O|O	**85013**	**89414**
		1288701		...	...	O|O	**85013**	**89414**
		1288702		...	...	O|O	**85013**	**89414**
270								
	Models with Woodhead Shock (Stamping Number ACHB 966)	ACHB966		...	...	–|–	**83136**	...
320								
2019	Models with 12,000 lb to 14,600 lb Taperleaf Spring Suspension and Set Forward Front Axle.	02-01787	O|O	**85062**	**89408**		...	...
		02-02737	O|O	**85062**	**89408**		...	...
		0201787	O|O	**85062**	**89408**		...	...
		0202737	O|O	**85062**	**89408**		...	...
		B71-6009	O|O	**85062**	**89408**		...	...

Year Ano Année	Model Modelo Modle	OEM #		Front			Rear	
				Fleetline	GasSLX		Fleetline	GasSLX
PETERBILT (CONT'D)								
320 (cont'd)								
2019	Models with 12,000 lb to 14,600 lb Taperleaf Spring Suspension and Set Forward Front Axle.	B716009	O|O	**85062**	**89408**		...	...
2019	Models with 18,000 lb to 23,000 lb Taperleaf Front Spring Suspension and Set Forward Front Axle.	02-02742	O|O	**85062**	**89408**		...	...
		0202742	O|O	**85062**	**89408**		...	...
		B71-6011	O|O	**85062**	**89408**		...	...
		B716011	O|O	**85062**	**89408**		...	...
2019	Models with Air Trac Suspension (40,000 lb)	C71-6003		...	...	–|O	**85988**	...
		C716003		...	...	–|O	**85988**	...
2019	Models with Air Trac Suspension (46,000 lb)	03-07421		...	...	–|O	**85311**	**89424**
		0307421		...	...	–|O	**85311**	**89424**
		C71-6002		...	...	–|O	**85311**	**89424**
		C716002		...	...	–|O	**85311**	**89424**
2019	Models with Hendrickson HMX 400/460 Haulmax with 16.5" Saddle	60680-004		...	...		**83143**	...
		60680-004L		...	...		**83143**	...
		60680004		...	...		**83143**	...
		60680004L		...	...		**83143**	...
2019	Models with Hendrickson HMX 400/460 Haulmax with 17.5" & 18.5" Saddle	60680-005		...	...		**83142**	...
		60680-005L		...	...		**83142**	...
		60680005		...	...		**83142**	...
		60680005L		...	...		**83142**	...
	Models with Neway AD-252-10 Tandem Axle	90045132		...	...	O|O	**85909**	...
330								
87-89	Models with Air Trac Suspension (46,000 lb.)	03-07421		...	...	–|O	**85311**	**89424**
		0307421		...	...	–|O	**85311**	**89424**
		C71-6002		...	...	–|O	**85311**	**89424**
		C716002		...	...	–|O	**85311**	**89424**
90-94	Models with Air Trac Suspension (46,000 lb)	03-07421		...	...	–|O	**85311**	**89424**
		0307421		...	...	–|O	**85311**	**89424**
		C71-6002		...	...	–|O	**85311**	**89424**
		C716002		...	...	–|O	**85311**	**89424**
2006	Models with Air Trac Suspension (46,000 lb)	03-07421		...	...	–|O	**85311**	**89424**
		0307421		...	...	–|O	**85311**	**89424**
		C71-6002		...	...	–|O	**85311**	**89424**
		C716002		...	...	–|O	**85311**	**89424**
2006	Models with Reyco 79KB Rear Steel Spring Suspension	16725-01		...	...	O|O	**83126**	**89430**
		19495-01		...	...	O|O	**83126**	**89430**
		1672501		...	...	O|O	**83126**	**89430**
		1949501		...	...	O|O	**83126**	**89430**
		TK19679		...	...	O|O	**83126**	**89430**
	Models with O.E.M. Number	02-03020	O|O	**85910**	...		...	...
		0203020	O|O	**85910**	...		...	...
		B71-6017	O|O	**85910**	...		...	...
		B716017	O|O	**85910**	...		...	...
362								
	C.O.E. Models with 12000 lb capacity	02-02736	O|O	**85302**	**89420**		...	...
		0202736	O|O	**85302**	**89420**		...	...
	Models with Air Trac Suspension (38000 or 40000 lb) To 11/82	03-04176		...	...	O|O	**85308**	**89422**
		0304176		...	...	O|O	**85308**	**89422**
367								
	Models with Air Track Tri Drive Suspension	03-08350		...	...	–|O	**85343**	...

Year Ano Année	Model Modelo Modle	OEM #		Front			Rear	
				Fleetline	GasSLX		Fleetline	GasSLX
PETERBILT (CONT'D)								
367 (cont'd)								
	Models with Air Track Tri Drive Suspension	0308350		...	...	–|o	85343	...
		C71-6004		...	...	–|o	85343	...
		C716004		...	...	–|o	85343	...
376								
00-03	Models with Air Trac Suspension (46,000 lb)	03-07421		...	...	–|o	85311	89424
		0307421		...	...	–|o	85311	89424
97-98	Models with Air Trac Suspension (46,000 lb)	03-07421		...	...	–|o	85311	89424
		0307421		...	...	–|o	85311	89424
1993	Models with Air Trac Suspension (46,000 lb)	03-07421		...	...	–|o	85311	89424
		0307421		...	...	–|o	85311	89424
2000	Models with 12,000 lb to 14,600 lb Taperleaf Spring Suspension and Set Forward Front Axle.	02-02737	o|o	85062	89408		...	...
		0202737	o|o	85062	89408		...	...
		B71-6007	o|o	85062	89408		...	...
		B71-6009	o|o	85062	89408		...	...
		B716007	o|o	85062	89408		...	...
		B716009	o|o	85062	89408		...	...
2000	Models with 18,000 lb to 23,000 lb Taperleaf Front Spring Suspension and Set Forward Front Axle.	02-02742	o|o	85062	89408		...	...
		0202742	o|o	85062	89408		...	...
		B71-6011	o|o	85062	89408		...	...
		B716011	o|o	85062	89408		...	...
2002	Models with 12,000 lb to 14,600 lb Taperleaf Spring Suspension and Set Forward Front Axle.	02-02737	o|o	85062	89408		...	...
		0202737	o|o	85062	89408		...	...
		B71-6007	o|o	85062	89408		...	...
		B71-6009	o|o	85062	89408		...	...
		B716007	o|o	85062	89408		...	...
		B716009	o|o	85062	89408		...	...
2002	Models with 18,000 lb to 23,000 lb Taperleaf Front Spring Suspension and Set Forward Front Axle.	02-02742	o|o	85062	89408		...	...
		0202742	o|o	85062	89408		...	...
		B71-6011	o|o	85062	89408		...	...
		B716011	o|o	85062	89408		...	...
377								
	Conventional Models with Unibuilt Cab	29-02455	o|o	83008				
		2902455	o|o	83008				
		R71-6007	o|o	83008				
		R716007	o|o	83008				
379								
08-09	Models with Air Trac Suspension (46,000 lb)	03-07421		...	...	–|o	85311	89424
		03-07421SPL		...	...	–|o	85311	89424
		0307421		...	...	–|o	85311	89424
		0307421SPL		...	...	–|o	85311	89424
1985	Models with Air Trac Suspension (46,000 lb.)	03-07421		...	...	–|o	85311	89424
		03-07421SPL		...	...	–|o	85311	89424
		0307421		...	...	–|o	85311	89424
		0307421SPL		...	...	–|o	85311	89424
	Conventional Models with Unibuilt Cab	29-02455	o|o	83008				
		2902455	o|o	83008				
		R71-6007	o|o	83008				
		R716007	o|o	83008				
385								
	Models with 12,000 lb to 14,600 lb Taperleaf Spring Suspension and Set Forward Front Axle. To 2007	02-02737	o|o	85062	89408		...	...

PETERBILT (CONT'D)

385 (cont'd)

Year Ano Année	Model Modelo Modle	OEM #		Front Fleetline	Front GasSLX		Rear Fleetline	Rear GasSLX
	Models with 12,000 lb to 14,600 lb Taperleaf Spring Suspension and Set Forward Front Axle. To 2007	0202737	O|O	85062	89408		...	...
		B71-6007	O|O	85062	89408		...	...
		B71-6009	O|O	85062	89408		...	...
		B716007	O|O	85062	89408		...	...
		B716009	O|O	85062	89408		...	...
	Models with 18,000 lb to 23,000 lb Taperleaf Front Spring Suspension and Set Forward Front Axle. To 2007	02-02742	O|O	85062	89408		...	...
		0202742	O|O	85062	89408		...	...
		B71-6011	O|O	85062	89408		...	...
		B716011	O|O	85062	89408		...	...
	Models with Chalmers 40,000 lb Rear Suspension	665174		...	...	O|O	85060	...
		800670		...	...	O|O	85060	...
	Models with Neway ARD 125/244-8 Models Rear Air Suspension	90044011		...	...	O|O	85004	...

387

	Models with 12,000 lb to 14,600 lb Taperleaf Spring Suspension and Set Forward Front Axle. To 2011	02-02737	O|O	85062	89408		...	...
		0202737	O|O	85062	89408		...	...
		B71-6007	O|O	85062	89408		...	...
		B71-6009	O|O	85062	89408		...	...
		B716007	O|O	85062	89408		...	...
		B716009	O|O	85062	89408		...	...
	Models with 18,000 lb to 23,000 lb Taperleaf Front Spring Suspension and Set Forward Front Axle. To 2011	02-02742	O|O	85062	89408		...	...
		0202742	O|O	85062	89408		...	...
		B71-6011	O|O	85062	89408		...	...
		B716011	O|O	85062	89408		...	...

388

06-07	Conventional Day Cab with O.E.M. Number	20-16755	O|O	83042				
		2016755	O|O	83042				
		R71-6005	O|O	83042				
		R716005	O|O	83042				
16-17	388 Models with 70" Sleepers	29-02455	O|O	83008				
		2902455	O|O	83008				
		R71-6007	O|O	83008				
		R716007	O|O	83008				
16-17	Models with 12,000 lb to 14,600 lb Taperleaf Spring Suspension and Set Forward Front Axle.	B71-6007	O|O	85062	89408		...	...
		B716007	O|O	85062	89408		...	...
16-17	Models with 12,000 lb to 14,600 lb Taperleaf Spring Suspension and Set Forward Front Axle. (Heavy Duty)	B71-6009	O|O	85062	89408		...	...
		B716009	O|O	85062	89408		...	...
16-17	Models with 18,000 lb to 23,000 lb Taperleaf Front Spring Suspension and Set Forward Front Axle.	02-02742	O|O	85062	89408		...	...
		0202742	O|O	85062	89408		...	...
		B71-6011	O|O	85062	89408		...	...
		B716011	O|O	85062	89408		...	...
16-17	Models with Air Trac Suspension (46,000 lb)	03-07421		...	...	–|O	85311	89424
		0307421		...	...	–|O	85311	89424
		C71-6002		...	...	–|O	85311	89424
		C716002		...	...	–|O	85311	89424
16-17	Models with Hendrickson HMX 400/460 Haulmax with 16.5" Saddle	60680-004		...	...		83143	...
		60680-004L		...	...		83143	...
		60680004		...	...		83143	...
		60680004L		...	...		83143	...

Year Ano Année	Model Modelo Modle	OEM #		Front			Rear	
				Fleetline	GasSLX		Fleetline	GasSLX
PETERBILT (CONT'D)								
388 (cont'd)								
16-17	Models with Hendrickson HMX 400/460 Haulmax with 17.5" & 18.5" Saddle	60680-005		...	...		83142	...
		60680-005L		...	...		83142	...
		60680005		...	...		83142	...
		60680005L		...	...		83142	...
16-17	Models with Peterbilt Air Leaf Suspension	03-07421		...	...	−|○	85311	89424
		03-07421PLUS		...	...	−|○	85311	89424
		0307421		...	...	−|○	85311	89424
		0307421PLUS		...	...	−|○	85311	89424
2016	Conventional Models with Front Air Suspension and Set Back Front Axle.	02-02739	○|○	85013	89414		...	...
		85013A0C	○|○	85013	89414		...	...
		0202739	○|○	85013	89414		...	...
548								
2022	Models with Hendrickson HMX 400/460 Haulmax with 16.5" Saddle	60680-004		...	...		83143	...
		60680-004L		...	...		83143	...
		60680004		...	...		83143	...
		60680004L		...	...		83143	...
2022	Models with Hendrickson HMX 400/460 Haulmax with 17.5" & 18.5" Saddle	60680-005		...	...		83142	...
		60680-005L		...	...		83142	...
		60680005		...	...		83142	...
		60680005L		...	...		83142	...
ADDITIONAL APPLICATIONS								
13-21	Models with O.E.M. Number	B71-6010	○|○	85023 or 89415				
		B716010	○|○	85023 or 89415				
	Additional O.E.M. Interchanges	03-08781-2		...	...	−|−	85069	89455
		03087812		...	...	−|−	85069	89455
		C71-1011PLUS-2		...	...	−|−	85069	89455
		C711011PLUS2		...	...	−|−	85069	89455
	Models with O.E.M. Number	02-0739PLUS-2	○|○	85013	89414		...	...
		02-01759	○|○	83312	89409		...	...
		02-01890	○|○	85012	89413		...	...
		02-02061	○|○	85013	89414		...	...
		02-02142	○|○	85036	89405		...	...
		02-02225	○|○	85012	89413		...	...
		02-02736-2	○|○	85302	89420		...	...
		02-02736PLUS-2	○|○	85302	89420		...	...
		02-02737-2	○|○	85062	89408		...	...
		02-02737PLUS-2	○|○	85062	89408		...	...
		02-02738-2	○|○	85012	89413		...	...
		02-02738PLUS-2	○|○	85012	89413		...	...
		02-02739-2	○|○	85013	89414		...	...
		02-02740-2	○|○	85036	89405		...	...
		02-02741-2	○|○	85012	89413		...	...
		02-02742-2	○|○	85062	89408		...	...
		02-04010-2	○|○	85012	89413		...	...
		03-01635		...	...	○|○	85308	89422
		03-04629		...	...	−|○	85311	89424
		03-05106		...	...	−|○	85033	89427
		03-05384		...	...	−|○	85033	89427
		03-06084		...	...	−|○	85033	89427
		03-06084PLUS-2		...	...	−|○	85033	89427
		03-07281		...	...	−|○	85311	89424
		03-07421PLUS-2		...	...	−|○	85311	89424

PETERBILT (CONT'D)

ADDITIONAL APPLICATIONS (cont'd)

Year Ano Année	Model Modelo Modle	OEM #		Front			Rear	
				Fleetline	GasSLX		Fleetline	GasSLX
	Models with O.E.M. Number	03-07423-2		...	...	–|O	85033	89427
		03-07423PLUS-2		...	...	–|O	85033	89427
		03-07424		...	...	–|O	85311	89424
		03-07424PLUS		...	...	–|O	85311	89424
		03-08350-2		...	...	–|O	85343	...
		10-12032-	O|O	85320	89429		...	...
		16-13947-		...	...	–|O	85319	89428
		23-08233		...	...	O|O	85308	89422
		23-10393		...	...	O|O	85308	89422
		23-12262	O|O	85012	89413		...	...
		020739PLUS2	O|O	85013	89414		...	...
		47902-13PLUS-2		...	...	O|O	83122	89406
		0201759	O|O	83312	89409		...	...
		0201890	O|O	85012	89413		...	...
		0202061	O|O	85013	89414		...	...
		0202142	O|O	85036	89405		...	...
		0202225	O|O	85012	89413		...	...
		0202736PLUS2	O|O	85302	89420		...	...
		0202737PLUS2	O|O	85062	89408		...	...
		0202738PLUS2	O|O	85012	89413		...	...
		0301635		...	...	O|O	85308	89422
		0304629		...	...	–|O	85311	89424
		0305106		...	...	–|O	85033	89427
		0305384		...	...	–|O	85033	89427
		0306084		...	...	–|O	85033	89427
		0306084PLUS2		...	...	–|O	85033	89427
		0307281		...	...	–|O	85311	89424
		0307421PLUS2		...	...	–|O	85311	89424
		0307423PLUS2		...	...	–|O	85033	89427
		0307424		...	...	–|O	85311	89424
		0307424PLUS		...	...	–|O	85311	89424
		665133		...	...	O|O	83203	89436
		665565PLUS2		...	...	O|O	85007	...
		665565PLUS-2		...	...	O|O	85007	...
		665617	O|O	85031	...		...	...
		665617-2	O|O	85031	...		...	...
		665655	O|O	85062	89408		...	...
		665656	O|O	85012	89413		...	...
		665657	O|O	85013	89414		...	...
		665658	O|O	85036	89405		...	...
		665660		...	...	–|O	85033	89427
		665662	O|O	85012	89413		...	...
		665738	O|O	85910	...		...	...
		665738-2	O|O	85910	...		...	...
		665752		...	...	O|O	85067	89451
		665762	O|O	85012	89413		...	...
		665788		...	...	O|O	85000	89436
		665788-2		...	...	O|O	85000	89436
		665826		...	...	–|–	85069	89455
		665858	O|O	85070	89459		...	...
		665858-2	O|O	85070	89459		...	...
		665876	O|O	85959	...		...	...
		665945		...	...	–|–	85902	...
		665945-2		...	...	–|–	85902	...

PETERBILT (CONT'D)

ADDITIONAL APPLICATIONS (cont'd)

Year Ano Année	Model Modelo Modle	OEM #		Front			Rear	
				Fleetline	GasSLX		Fleetline	GasSLX
	Models with O.E.M. Number	671052-2	○|○	85070	89459		...	...
		671091		...	...	–|–	85069	89455
		671092	○|○	85012	89413		...	...
		671962SPL		...	...		85936	89456
		671963		...	...		85937	...
		680026		...	...	○|○	85302	89420
		680027		...	...	○|○	85308	89422
		680185		...	...	○|○	85308	89422
		680241		...	...	–|○	85311	89424
		680261-2	○|○	85062	89408		...	...
		680348	○|○	85012	89413		...	...
		680435		...	...	–|○	85033	89427
		680457	○|○	85302	89420		...	...
		680459		...	...	–|○	85311	89424
		680586		...	...	–|○	85311	89424
		2018987C1PLUS2		...	...	○|○	85003	89411
		2018987C1PLUS-2		...	...	○|○	85003	89411
		02027362	○|○	85302	89420		...	...
		02027372	○|○	85062	89408		...	...
		02027382	○|○	85012	89413		...	...
		02027392	○|○	85013	89414		...	...
		02027402	○|○	85036	89405		...	...
		02027412	○|○	85012	89413		...	...
		02027422	○|○	85062	89408		...	...
		02040102	○|○	85012	89413		...	...
		2308233		...	...	○|○	85308	89422
		2310393		...	...	○|○	85308	89422
		2312262	○|○	85012	89413		...	...
		03074232		...	...	–|○	85033	89427
		03083502		...	...	–|○	85343	...
		6656172	○|○	85031	...		...	...
		6658582	○|○	85070	89459		...	...
		6710522	○|○	85070	89459		...	...
		6802612	○|○	85062	89408		...	...
		1012032002PLUS2	○|○	85320	89429		...	...
		1613947000PLUS2		...	...	–|○	85319	89428
		B71-1000	○|○	85031	...		...	...
		B71-1001	○|○	85070	89459		...	...
		B71-1002	○|○	85001	89410		...	...
		B71-1003	○|○	83312	89409		...	...
		B71-6000-2	○|○	85959	...		...	...
		B71-6002	○|○	85012	89413		...	...
		B71-6002-2	○|○	85012	89413		...	...
		B71-6003	○|○	85029	...		...	...
		B71-6003-2	○|○	85029	...		...	...
		B71-6004	○|○	85084	89460		...	...
		B71-6008	○|○	83312	89409		...	...
		B711000	○|○	85031	...		...	...
		B711001	○|○	85070	89459		...	...
		B711002	○|○	85001	89410		...	...
		B711003	○|○	83312	89409		...	...
		B716002	○|○	85012	89413		...	...
		B716003	○|○	85029	...		...	...
		B716004	○|○	85084	89460		...	...

PETERBILT (CONT'D)

ADDITIONAL APPLICATIONS (cont'd)

Year Ano Année	Model Modelo Modle	OEM #		Front			Rear	
				Fleetline	GasSLX		Fleetline	GasSLX
	Models with O.E.M. Number	B716008	O|O	83312	89409		...	...
		B7160022	O|O	85012	89413		...	...
		C71-1002-2		...	...	O|O	85067	89451
		C71-1002PLUS-2		...	...	O|O	85067	89451
		C71-1011SPL		...	...	–|–	85069	89455
		C71-1013		...	...		85985	...
		C71-1014		...	...		85936	89456
		C71-6000-2		...	...	O|O	85067	89451
		C71-6005		...	...	–|–	85069	89455
		C711002PLUS2		...	...	O|O	85067	89451
		C711011SPL		...	...	–|–	85069	89455
		C711013		...	...		85985	...
		C711014		...	...		85936	89456
		C716005		...	...	–|–	85069	89455
		C7110022		...	...	O|O	85067	89451
		C7160002		...	...	O|O	85067	89451
		K374-26PLUS-2	O|O	85001	89410		...	...
		K374-27-2	O|O	85001	89410		...	...
		K37426PLUS2	O|O	85001	89410		...	...
		K374272	O|O	85001	89410		...	...
	OE PLUS Shock Stamping Number	02-02736PLUS	O|O	85302	89420		...	...
		02-02737PLUS	O|O	85062	89408		...	...
		02-02738PLUS	O|O	85012	89413		...	...
		02-02739PLUS	O|O	85013	89414		...	...
		03-04176PLUS		...	...	O|O	85308	89422
		03-06084PLUS		...	...	–|O	85033	89427
		03-07421PLUS		...	...	–|O	85311	89424
		03-07423PLUS		...	...	–|O	85033	89427
		10-12032-002PLUS	O|O	85320	89429		...	...
		10-12542-000PLUS	O|O	85901	...		...	...
		16-13947-000PLUS		...	...	–|O	85319	89428
		47902-13PLUS		...	...	O|O	83122	89406
		60670-005PLUS		...	...	O|O	83137	...
		60670-008PLUS		...	...	O|O	83123	89405
		70701PLUS		...	...	–|–	85900	...
		0202736PLUS	O|O	85302	89420		...	...
		0202737PLUS	O|O	85062	89408		...	...
		0202738PLUS	O|O	85012	89413		...	...
		0202739PLUS	O|O	85013	89414		...	...
		0304176PLUS		...	...	O|O	85308	89422
		0306084PLUS		...	...	–|O	85033	89427
		0307421PLUS		...	...	–|O	85311	89424
		0307423PLUS		...	...	–|O	85033	89427
		665565PLUS		...	...	O|O	85007	...
		671962PLUS		...	...		85936	89456
		2018987C1PLUS		...	...	O|O	85003	89411
		4790213PLUS		...	...	O|O	83122	89406
		8086053PLUS		...	...	O|O	85047	89435
		60670005PLUS		...	...	O|O	83137	...
		60670008PLUS		...	...	O|O	83123	89405
		90044025PLUS	O|O	83209	89414		...	...
		90044089PLUS		...	...	O|O	83124	89407
		1012032002PLUS	O|O	85320	89429		...	...
		1012542000PLUS	O|O	85901	...		...	...

PETERBILT (CONT'D)

ADDITIONAL APPLICATIONS (cont'd)

Year Ano Année	Model Modelo Modle	OEM #		Front			Rear	
				Fleetline	GasSLX		Fleetline	GasSLX
	OE PLUS Shock Stamping Number	1613947000PLUS		...	...	–|O	85319	89428
		B71-6015	O|O	85012	89413		...	...
		B716015	O|O	85012	89413		...	...
		C71-1002PLUS		...	...	O|O	85067	89451
		C71-1011PLUS		...	...	–|–	85069	89455
		C711002PLUS		...	...	O|O	85067	89451
		C711011PLUS		...	...	–|–	85069	89455
		K374-26PLUS	O|O	85001	89410		...	...
		K374-28PLUS		...	...	O|O	85314	89425
		K374-29PLUS		...	...	–|–	85310	89423
		K374-33PLUS	O|O	83312	89409		...	...
		K37426PLUS	O|O	85001	89410		...	...
		K37428PLUS		...	...	O|O	85314	89425
		K37429PLUS		...	...	–|–	85310	89423
		K37433PLUS	O|O	83312	89409		...	...
	TruckMaster Shock Stamping Number	665632	O|O	85013	89414		...	...
		665783		...	...	O|O	83123	89405
		665784		...	...	O|O	83122	89406
		665785		...	...	O|O	83137	...
		665844		...	...	–|–	85069	89455
		665918		...	...	–|–	85900	...
		665926		...	...	O|O	85047	89435
		665927	O|O	85901	...		...	...
		665928	O|O	85062	89408		...	...
		665930	O|O	85001	89410		...	...
		665931	O|O	83312	89409		...	...
		665932	O|O	85012	89413		...	...
		665950		...	...	–|–	85902	...
		671052	O|O	85070	89459		...	...
		671654		...	...		85936	89456
		671699		...	...		85937	...
		671794		...	...	O|O	85067	89451
		680237		...	...	O|O	85303	89422
		680239		...	...	–|–	85310	89423
		680240		...	...	O|O	85302	89420
		680242		...	...	O|O	85308	89422
		680253		...	...	O|O	85314	89425
		680261	O|O	85062	89408		...	...
		680279	O|O	83209	89414		...	...
		680280		...	...	O|O	85906	89407
		680281		...	...	O|O	85003	89411
		680303		...	...	O|O	85007	...
		680425	O|O	85320	89429		...	...
		680435		...	...	–|O	85033	89427
		680473		...	...	–|O	85319	89428
78-21	48" Sleepers with Link Bunkmate Model PBS48-A	1202-1044	O|O	83025				
		12021044	O|O	83025				
78-21	63" Sleepers with Link Bunkmate Model PBS63-A	1202-1044	O|O	83025				
		12021044	O|O	83025				
	Additional O.E.M. Interchanges	K374-10-2		...	...	O|O	83215	...
		K374102		...	...	O|O	83215	...
	Conventional Day Cab with O.E.M. Number	654812	O|O	83042				
	Conventional Models with Unibuilt Cab	654782	O|O	83008				
	Models with O.E.M. Number	60670-005PLUS-2		...	...	O|O	83137	...

APPLICATION GUIDE - TRUCKS, TRAILERS AND BUSES

Year Ano Année	Model Modelo Modle	OEM #		Front			Rear	
				Fleetline	GasSLX		Fleetline	GasSLX
PETERBILT (CONT'D)								
	Models with O.E.M. Number	654919	O|O	83035				
		90044089PLUS-2		...	...	O|O	83124	89407
		K374-33-2	O|O	83312	89409		...	...
		K374-33PLUS-2	O|O	83312	89409		...	...
		R71-1004	O|O	83049				
		R71-1005	O|O	83024				
		R711004	O|O	83049				
		R711005	O|O	83024				
	Models with PowerPacker Cab Suspension	PP1058870	O|O	83059				
		PP2582870	O|O	83012				
PETERBILT CAB SHOCKS								
	Models with PowerPacker Cab Suspension	96027-1054	O|O	83011				
		960271054	O|O	83011				
PHOENIX CRUISER RV								
11-20	All models with Ford E350 & E450 Chassis	ASH-1136		...	...	–|O	G63623	...
11-22	All models with Ford E350 & E450 Chassis	ASH-1154	–|O	G63622	...		...	...
PIERCE MANUFACTURING INC.								
	Additional O.E.M. Interchanges	9HE302	O|O	85919				
		40-0242	O|O	83312	89409		...	...
		40-3089	O|O	83312	89409		...	...
		40-3135	O|O	85030 or 89440				
		40-4845	O|O	85304				
		40-4951	–|O	85316	89426		...	...
		40-5348	O|O	85058	89431		...	...
		40-6967	O|O	85030 or 89440				
		400242	O|O	83312	89409		...	...
		404845	O|O	85304				
		404951	–|O	85316	89426		...	...
		405348	O|O	85058	89431		...	...
		406967	O|O	85030 or 89440				
		1445910	O|O	85300 or 89419				
		1943267	O|O	85962				
		SD-15165	O|O	85304				
	Models w/ Hendrickson FireMaax EX Suspension with Small Clamp group and 8-5/8" Ride Height	060665-013		...	...	O|O	85965	...
		060665-013L		...	...	O|O	85965	...
		60665013		...	...	O|O	85965	...
		060665013		...	...	O|O	85965	...
	Models with Arrow Chassis (Except Arrow XT)	40-0242	O|O	83312	89409		...	...
		400242	O|O	83312	89409		...	...
	Models with Dash Chassis (Except Dash -2000)	40-0242	O|O	83312	89409		...	...
		400242	O|O	83312	89409		...	...
	Models with Lance Chassis	40-4951	–|O	85316	89426		...	...
		404951	–|O	85316	89426		...	...
	Models with Quantum Chassis	40-6967	O|O	85030 or 89440				
		406967	O|O	85030 or 89440				
	Models with Saber Chassis	40-4951	–|O	85316	89426		...	...
		404951	–|O	85316	89426		...	...
	Pierce FireTrucks with O.E.M. Number	680401	O|O	85307	...		...	...
	Self - Steering Axle Shocks	2034140	O|O	646177				
POWERHOUSE COACH INC.								
06-10	Models with Volvo VNL780 Chassis with 12,500 - 14,600 lb Front Axle	20433424	O|O	85061	89450		...	...

APPLICATION GUIDE - TRUCKS, TRAILERS AND BUSES

Year Ano Année	Model Modelo Modle	OEM #		Front			Rear	
				Fleetline	GasSLX		Fleetline	GasSLX
POWERHOUSE COACH INC. (CONT'D)								
06-10	Models with Volvo VNL780 Chassis with 12,500 - 14,600 lb Front Axle	20973993	O|O	**85061**	**89450**		...	...
06-11	Models with Volvo VNL780 Chassis with 40,000 lb Rear Air Suspension	20551628		...	...	O|O	**85066**	**89448**
		471700000443		...	...	O|O	**85066**	**89448**
06-16	Models with Volvo VNL780 Chassis with Hendrickson Airtek	64838-003	O|O	**85933**	**89454**		...	...
		64838-003L	O|O	**85933**	**89454**		...	...
		20485632	O|O	**85933**	**89454**		...	...
		20485633	O|O	**85933**	**89454**		...	...
		21137330	O|O	**85933**	**89454**		...	...
		64838003	O|O	**85933**	**89454**		...	...
		64838003L	O|O	**85933**	**89454**		...	...
		471700003832	O|O	**85933**	**89454**		...	...
11-18	Models with Volvo VNL780 Chassis with 12,500 - 14,600 lb Front Axle	21436086	O|O	**85098**	**89502**		...	...
		141700005838	O|O	**85098**	**89502**		...	...
11-18	Models with Volvo VNL780 Chassis with 40,000 lb Rear Air Suspension	21462380		...	...	O|O	**85088**	...
		471700006040		...	...	O|O	**85088**	...
POWERPACKER								
	Models with PowerPacker Cab Suspension	PP1058870	O|O	**83059**				
PREVOST								
89-00	XL-45 Coach	630127		...	...	O|O	**85736**	...
		630134	O|O	**85329**	...		...	...
		650407		...	...	O|O	**85736**	...
		680422	O|O	**85329**	...		...	...
		481700999376	O|O	**85329**	...		...	...
		481700999386		...	...	O|O	**85736**	...
96-03	H3 Bus, H3 VIP Bus	630127		...	...	O|O	**85736**	...
		630134	O|O	**85329**	...		...	...
		650407		...	...	O|O	**85736**	...
		680422	O|O	**85329**	...		...	...
		481700999376	O|O	**85329**	...		...	...
		481700999386		...	...	O|O	**85736**	...
99-03	XL II Bus, XL II MTH Bus	630127		...	...	O|O	**85736**	...
		630134	O|O	**85329**	...		...	...
		650407		...	...	O|O	**85736**	...
		680422	O|O	**85329**	...		...	...
		481700999376	O|O	**85329**	...		...	...
		481700999386		...	...	O|O	**85736**	...
04-06	XL II Bus, XL II MTH Bus	630252	O|O	**85329**	...		...	...
		630253		...	...	O|O	**85713**	...
04-09	H3 Bus, H3 VIP Bus	630252	O|O	**85329**	...		...	...
		630253		...	...	O|O	**85713**	...
07-09	XL II MTH Bus	630253		...	...	O|O	**85713**	...
	Additional O.E.M. Interchanges	01-0100-905	O|O	**85303 or 89422**				
		63-1013	O|O	**85329**	...		...	...
		52001	–|–	**85708**				
		196533	–|–	**85708**				
		630001		...	...	O|O	**85713**	...
		630080		...	...	O|O	**85713**	...
		630091	O|O	**85736**				
		631013	O|O	**85329**	...		...	...
		680323	O|O	**85700**				
		680492		...	...	O|O	**85713**	...
		690060		...	...	O|O	**85713**	...
		3166657	O|O	**85700**				
		010100905	O|O	**85303 or 89422**				

APPLICATION GUIDE - TRUCKS, TRAILERS AND BUSES

Year Ano Année	Model Modelo Modle	OEM #		Front			Rear	
				Fleetline	GasSLX		Fleetline	GasSLX
PREVOST (CONT'D)								
	Additional O.E.M. Interchanges	19501669		...	...	o|o	85339	...
		19502711	o|o	85702				
		19506846		...	...	o|o	85339	...
		74939852	o|o	85308 or 89422				
		0822045526	o|o	85702				
		G1011822		...	...	o|o	85702	...
		N22212	o|o	85700				
	LeMirage XL 40 ft, 45 ft, & H3-45 VIP Coaches with I-Beam Front Suspension	630134	o|o	85329	...		...	...
		481700999376	o|o	85329	...		...	...
	Models with O.E.M. Number	12L589		...	...		85729	...
		12L-5-89		...	...		85729	...
		12T113	o|o	85303	89422		...	...
		12T-1-13	o|o	85303	89422		...	...
		630103	o|o	85329	...		...	...
		630161		...	...	o|o	85736	...
		630234	o|o	85329	...		...	...
		630236	o|o	85329	...		...	...
		19501288		...	...		85729	...
		19501289	–|–	85728	...		...	...
		19501547		...	...		85740	...
		481700000207	o|o	85329	...		...	...
		481700000209		...	...	o|o	85713	...
		G5008070	o|o	85700	...		...	...
	X3-45 Bus	630253		...	...	o|o	85713	...
RAM								
4500								
12-18	Models with O.E.M. Number	6811 1104AB	–|o	85649	...		...	...
		6811 1104AB001	–|o	85649	...		...	...
		6811 1104AB-001	–|o	85649	...		...	...
		6811 1105AC	–|o	85649	...		...	...
		6811 1105AC001	–|o	85649	...		...	...
		6811 1105AC-001	–|o	85649	...		...	...
		6811 1107AA		...	...	o|o	85650	...
		6811 1107AA001		...	...	o|o	85650	...
		6811 1107AA-001		...	...	o|o	85650	...
		05168284AC	–|o	85649	...		...	...
		05168295AB	–|o	85649	...		...	...
		05168296AA		...	...	o|o	85650	...
5500								
12-18	Models with O.E.M. Number	6811 1104AB	–|o	85649	...		...	...
		6811 1104AB001	–|o	85649	...		...	...
		6811 1104AB-001	–|o	85649	...		...	...
		6811 1105AC	–|o	85649	...		...	...
		6811 1105AC001	–|o	85649	...		...	...
		6811 1105AC-001	–|o	85649	...		...	...
		6811 1107AA		...	...	o|o	85650	...
		6811 1107AA001		...	...	o|o	85650	...
		6811 1107AA-001		...	...	o|o	85650	...
		05168284AC	–|o	85649	...		...	...
		05168295AB	–|o	85649	...		...	...
		05168296AA		...	...	o|o	85650	...
RAMERIZ TRAILER								
TRAILER								
	86 AR / RS 1015, 1035, 3015, 3035 Slider Air Suspension	18165-01		...	...	o|o	85006	...

Year Ano Année	Model Modelo Modle	OEM #		Front			Rear	
				Fleetline	GasSLX		Fleetline	GasSLX
RAMERIZ TRAILER (CONT'D)								
TRAILER (cont'd)								
	86 AR / RS 1015, 1035, 3015, 3035 Slider Air Suspension	1816501		...	...	○|○	**85006**	...
RAYDAN MANUFACTURING								
	Air Link Suspensions with O.E.M. Number	14QK3100		...	...	○|○	**85739**	...
		14QK-3100		...	...	○|○	**85739**	...
		446-51-211		...	...	○|○	**85739**	...
		44651211		...	...	○|○	**85739**	...
	AL460 Air Link Suspension	700115		...	...	○|○	**85712**	...
	AL520 Air Link Suspension	700115		...	...	○|○	**85712**	...
RED LION TRAILER								
	Models with O.E.M. Number	90044989	○|○	**85059**				
	Trailers with Neway Air Susp. RL196-14, -15	90044978		...	...	○|○	**85059**	...
RENEGADE RV								
06-10	Models with Volvo VNL630 Chassis with 12,500 - 14,600 lb Front Axle	20433424	○|○	**85061**	**89450**		...	...
		20973993	○|○	**85061**	**89450**		...	...
06-11	Models with Volvo VNL630 Chassis with 40,000 lb Rear Air Suspension	20551628		...	...	○|○	**85066**	**89448**
		471700000443		...	...	○|○	**85066**	**89448**
11-18	Models with Volvo VNL630 Chassis with 12,500 - 14,600 lb Front Axle	21436086	○|○	**85098**	**89502**		...	...
		141700005838	○|○	**85098**	**89502**		...	...
11-18	Models with Volvo VNL630 Chassis with 40,000 lb Rear Air Suspension	21462380		...	...	○|○	**85088**	...
		471700006040		...	...	○|○	**85088**	...
09-19	Models with Freightliner M2-112 Chassis with 12000 lb to 20000 Front Axle	10-13809-000	○|○	**85958**	...		...	...
		1013809000	○|○	**85958**	...		...	...
		471700003920	○|○	**85958**	...		...	...
12-19	Ikon Series Motorhomes with Freightliner Cascadia Chassis and 12,000 to 13,300 lb Taperleaf Front Suspension	10-13809-000	○|○	**85958**	...		...	...
		1013809000	○|○	**85958**	...		...	...
		SDA471700003920	○|○	**85958**	...		...	...
15-19	Renegade XL Series Motorhomes with Freightliner Cascadia Chassis and 12,000 to 13,300 lb Taperleaf Front Suspension	10-13809-000	○|○	**85958**	...		...	...
		1013809000	○|○	**85958**	...		...	...
		SDA471700003920	○|○	**85958**	...		...	...
16-19	Verona & Verona LE Series Motorhomes with Freightliner M2-106 Chassis	10-13760-000	○|○	**85959**	...		...	...
		1013760000	○|○	**85959**	...		...	...
		471700002991	○|○	**85959**	...		...	...
		SDA471700002991	○|○	**85959**	...		...	...
	All Models with Freighliner Airliner Rear Air Suspension To 2019	16-18708-000		...	...	○|○	**85724**	**89443**
		1618708000		...	...	○|○	**85724**	**89443**
		SDA471700002809		...	...	○|○	**85724**	**89443**
REX MIXER								
	Rear Discharge Mixers with Self - Steering Axle Shock	102-13441-10	○|○	**646155**				
REYCO SUSPENSION								
ADDITIONAL APPLICATIONS								
	Models with O.E.M. Number	16824-01		...	...	○|○	**85006**	...
		17142-01		...	...	○|○	**85001**	**89410**
		20960-01		...	...	○|○	**83204**	...
		665519		...	...	○|○	**89414**	...
		665813		...	...	○|○	**85051**	...
		665830		...	...	○|○	**85045**	...
		665833		...	...	○|○	**85052**	...
		671707		...	...	○|○	**85323**	**89436**

REYCO SUSPENSION (CONT'D)

ADDITIONAL APPLICATIONS (cont'd)

Year Ano Année	Model Modelo Modle	OEM #	Front Fleetline	Front GasSLX	Rear Fleetline	Rear GasSLX
	Models with O.E.M. Number	680551	...	...	85738	...
		680552	...	...	85938	...
		680700	...	...	85938	...
		702135-01	...	...	85045	...
		702136-01	...	...	85052	...
		702209-01	...	...	85014	...
		704672-01	...	...	85938	...
		1682401	...	...	85006	...
		1714201	...	...	85001	89410
		2096001	...	...	83204	...
		70213501	...	...	85045	...
		70213601	...	...	85052	...
		70220901	...	...	85014	...
		70467201	...	...	85938	...

ADDITIONAL O.E.M. INTERCHANGES

Year Ano Année	Model Modelo Modle	OEM #	Front Fleetline	Front GasSLX	Rear Fleetline	Rear GasSLX
	Models with O.E.M. Number	23106-01	...	...	89430	...
		2310601	...	...	89430	...

DRIVE AXLE

Year Ano Année	Model Modelo Modle	OEM #	Front Fleetline	Front GasSLX	Rear Fleetline	Rear GasSLX
	21AR - 25000 lb Capacity	12887-01	...	...	85013	89414
		12887-02	...	...	85013	89414
		1288701	...	...	85013	89414
		1288702	...	...	85013	89414
	74AR - 30000 lb Capacity	12887-01	...	...	85013	89414
		12887-02	...	...	85013	89414
		1288701	...	...	85013	89414
		1288702	...	...	85013	89414
	79AR Models	12887-02	...	...	85013	89414
		1288702	...	...	85013	89414
	79KB Models	16725-01	...	...	83126	89430
		19495-01	...	...	83126	89430
		1672501	...	...	83126	89430
		1949501	...	...	83126	89430
	101A, 101AR Models	18166-01	...	...	85704	...
		1816601	...	...	85704	...
	102AR-7 Models	17794-01	...	...	83215	...
		1779401	...	...	83215	...
	102AR (Hvy Duty) Models	18286-01	...	...	89414	...
		1828601	...	...	89414	...
	102AR (Special) Models	17146-01	...	...	83209	89414
		1714601	...	...	83209	89414
	102AR (Standard) Models	12887-01	...	...	85013	89414
		12887-02	...	...	85013	89414
		1288701	...	...	85013	89414
		1288702	...	...	85013	89414
	102AR for Western Star Models	19824-01	...	...	85006	...
		1982401	...	...	85006	...
	102AR-LM Models	19623-01	...	...	83123	89405
		1962301	...	...	83123	89405
	102 Models	16725-01	...	...	83126	89430
		19495-01	...	...	83126	89430
		1672501	...	...	83126	89430
		1949501	...	...	83126	89430

APPLICATION GUIDE - TRUCKS, TRAILERS AND BUSES

Year Ano Année	Model Modelo Modle	OEM #		Front			Rear	
				Fleetline	GasSLX		Fleetline	GasSLX
REYCO SUSPENSION (CONT'D)								
DRIVE AXLE (cont'd)								
	102W Drive Models	21497-01		...	...	○|○	85005	89430
		2149701		...	...	○|○	85005	89430
	200 Models Air Suspension	20129-01		...	...	○|○	85007	...
		22062-01		...	...	○|○	85007	...
		2012901		...	...	○|○	85007	...
		2206201		...	...	○|○	85007	...
	240AR Air-Ride Suspension	20125-01		...	...	○|○	85030	89440
		20126-01		...	...	○|○	89440	...
		20129-01		...	...	○|○	85007	...
		2012501		...	...	○|○	85030	89440
		2012601		...	...	○|○	89440	...
		2012901		...	...	○|○	85007	...
	AirGlide 400 Air Suspension	20129-01		...	...	○|○	85007	...
		2012901		...	...	○|○	85007	...
	L132 Steering Stabilizer	701071-01	○|○	665937				
STEER AXLE								
	1200 (Spartan Option) Models	21310-01	○|○	85307	...		...	...
		2131001	○|○	85307	...		...	...
	1207 Models	17403-01	○|○	83122	89406		...	...
		1740301	○|○	83122	89406		...	...
	1209, 1212 Models	17358-01	○|○	83126	89430		...	...
		19495-01	○|○	83126	89430		...	...
		1735801	○|○	83126	89430		...	...
		1949501	○|○	83126	89430		...	...
	1209 (Alternate) Models	17408-01	○|○	85005	89430		...	...
		1740801	○|○	85005	89430		...	...
TRAILER								
	19AR / RS1062 Models with Unit # 700649-01 to -06	700098-01		...	...	○|○	83128	89436
		70009801		...	...	○|○	83128	89436
	19AR / RS1062 Models with Unit # 700649-07 to -12	24392-01		...	...	○|○	85051	...
		2439201		...	...	○|○	85051	...
	20 AR / RS 3162 Models with O.E.M. number	18163-01		...	...	○|○	83207	89407
		1816301		...	...	○|○	83207	89407
	20AR & 22AR Models with O.E.M. Number	700098-03		...	...	○|○	85052	...
		70009803		...	...	○|○	85052	...
	21B (Special) Models	18800-01		...	...	○|○	83203	89436
		1880001		...	...	○|○	83203	89436
	23 ARTB-14A, -15A, 16A or -19A Models	23523-01		...	...	○|○	85086	...
		2352301		...	...	○|○	85086	...
	23 ARTB-14A-FS Models	702135-01		...	...	○|○	85045	...
		70213501		...	...	○|○	85045	...
	23 ART Models with O.E.M. Number	665748		...	...	○|○	85086	...
	23 ARTU-14A-FS and -15A-FS Models	702135-01		...	...	○|○	85045	...
		70213501		...	...	○|○	85045	...
	23 ARTUL Models (All except -14A-FS and , -15A-FS)	23523-01		...	...	○|○	85086	...
		2352301		...	...	○|○	85086	...
	23 ARTU Models (All except -14A-FS and , -15A-FS)	23523-01		...	...	○|○	85086	...
		2352301		...	...	○|○	85086	...
	25 ARTB-13A, -14A, -15A, -16A, -17A Models	24392-01		...	...	○|○	85051	...
		2439201		...	...	○|○	85051	...
	25 ARTBL-13A, -14A, -15A, -16A, -17A, -18A, -19A Models	24392-01		...	...	○|○	85051	...
		2439201		...	...	○|○	85051	...

REYCO SUSPENSION (CONT'D)

TRAILER (cont'd)

Year Ano Année	Model Modelo Modle	OEM #		Front			Rear	
				Fleetline	GasSLX		Fleetline	GasSLX
	25 ARTBL-14A-FS, -15A-FS, -16A-FS, -17A-FS Models	702135-01		...	...		85045	...
		70213501		...	...		85045	...
	25 ARTBL-18A-FS, -19A-FS, -20A-FS Models	704672-01		...	...		85938	...
		70467201		...	...		85938	...
	25 ARTU-12A-FS	702136-01		...	...		85052	...
		70213601		...	...		85052	...
	25 ARTUL-13A, -13S, -14A, -14S, -15A, -15S, -16A, -16S, -17A, -17S, -18A, -18S, -19A, -19S Models	24392-01		...	...		85051	...
		2439201		...	...		85051	...
	25 ARTUL-18A-FS, -19A-FS, -20A-FS, -21A-FS, -22A-FS, -23A-FS, -24A-FS, -18-FS, -19-FS, -20-FS, -21-FS, -22-FS, -23-FS, -24-FS Models	704672-01		...	...		85938	...
		70467201		...	...		85938	...
	25 ARTU Models (All except -12A-FS)	24392-01		...	...		85051	...
		2439201		...	...		85051	...
	25 ARUU-06-5A-NZ Models	702136-01		...	...		85052	...
		70213601		...	...		85052	...
	25 ARUUL-09A, -09A-99, -9S, -09S-99 Models	702135-01		...	...		85045	...
		70213501		...	...		85045	...
	25 ARUUL-10A, -10S, -11A, -11S, -12A, -12S, -13A, -13S, -14A, -14S, -15A, -15S Models	23553-01		...	...		85938	...
		2355301		...	...		85938	...
	25 ARUU Models (All except -06-5A-NZ)	23553-01		...	...		85938	...
		2355301		...	...		85938	...
	30 ARTB-14A, -15A, -16A, -17A, -18A, -19A, -20A Models	23524-01		...	...		85738	...
		2352401		...	...		85738	...
	30 ARTB-19A-FS, -20A-FS Models	23553-01		...	...		85938	...
		2355301		...	...		85938	...
	30 ARTBL-15A, -16A, -17A, -18A, -19A Models	23524-01		...	...		85738	...
		2352401		...	...		85738	...
	30 ARTBL-19A-FS, -20A-FS Models	23553-01		...	...		85938	...
		2355301		...	...		85938	...
	30 ARTU-14A, -14S, -15A, -15S, -16A, -16S, -17A, -17S, -18A, -18S, -19A, -19S, -20A Models	23524-01		...	...		85738	...
		2352401		...	...		85738	...
	30 ARTU-20A-FS Models	23553-01		...	...		85938	...
		2355301		...	...		85938	...
	30 ARTUL-15A, -15S, -16A, -16S, -17A, -17S, -18A, -19A, -19S, -20A-TTN Models	23524-01		...	...		85738	...
		2352401		...	...		85738	...
	30 ARTUL-20A-FS Models	23553-01		...	...		85938	...
		2355301		...	...		85938	...
	30 ART with O.E.M. Number	23524-01		...	...		85738	...
		2352401		...	...		85738	...
	30 ARUU - 9, -12 and -17 Models	23524-01		...	...		85738	...
		2352401		...	...		85738	...
	30 ARUU - 14 and -15 Models	23553-01		...	...		85938	...
		2355301		...	...		85938	...
	30 ARUUL - 9, -14 and -15 Models	23553-01		...	...		85938	...
		2355301		...	...		85938	...
	30 ARUUL - 12 and -17 Models	23524-01		...	...		85738	...
		2352401		...	...		85738	...
	44 AR Models	19623-01		...	...		83123	89405
		1962301		...	...		83123	89405
	81C Models	12885-03		...	...		85300	89419
		1288503		...	...		85300	89419

Year Ano Année	Model Modelo Modle	OEM #		Front			Rear	
				Fleetline	GasSLX		Fleetline	GasSLX
REYCO SUSPENSION (CONT'D)								
TRAILER (cont'd)								
	81LC Models	12885-01		...	...	○|○	85300	89419
		1288501		...	...	○|○	85300	89419
	81LM Models	12886-01		...	...	○|○	85334	...
		1288601		...	...	○|○	85334	...
	81S Models	12885-03		...	...	○|○	85300	89419
		1288503		...	...	○|○	85300	89419
	86 AR / RS 1015, 1035, 3015, 3035 Slider Air Suspension	18165-01		...	...	○|○	85006	...
		1816501		...	...	○|○	85006	...
	87-6, 87-9 Models	12885-01		...	...	○|○	85300	89419
		1288501		...	...	○|○	85300	89419
	87-14, -17 Models	16230-01		...	...	○|○	85702	...
		1623001		...	...	○|○	85702	...
	87-14, -17 Slider Models	12885-01		...	...	○|○	85300	89419
		1288501		...	...	○|○	85300	89419
	87 for Great Dane Models	18163-01		...	...	○|○	83207	89407
		18164-01		...	...	○|○	83122	89406
		1816301		...	...	○|○	83207	89407
		1816401		...	...	○|○	83122	89406
RIDEWELL CORPORATION								
BUS AND R.V. AIR-RIDES								
	Mobile Home & RV with Air Suspension	AS563B		...	...	○|○	83203	89436
		S6009B		...	...	○|○	83203	89436
	RLT-230	1310002	○|○	665937				
	RSS-232	1317570B001	○|○	646155				
	RSS-236/R	1310002	○|○	665937				
		1310004	○|○	665937				
TRAILER AIR-RIDES								
	Models with O.E.M. Number	57645		...	...	○|○	85005	89430
		665526		...	...	○|○	85014	...
		1275943B		...	...	○|○	85005	89430
	RAR - 244 FeatherRide Light Duty Air Suspension (8,000 lb Capacity)	1270007		...	...	○|○	85045	...
	RAR-210	.....		...	...	○|○	83207	89407
		.....		...	...	○|○	85005	89430
		.....		...	...	○|○	85006	...
		AS546B		...	...	○|○	85006	...
		AS789B		...	...	○|○	85014	...
		S5878B		...	...	○|○	83207	89407
	RAR-210 For Trailers with 25" Drop	1253069B000		...	...	○|○	85005	89430
		AS3069B		...	...	○|○	85005	89430
		AS30698		...	...	○|○	85005	89430
	RAR-210 Tag Axle	AS563B		...	...	○|○	83203	89436
		S6009B		...	...	○|○	83203	89436
	RAR-221-11, 12, 13-USW Trailer with Shock Absorber and Hanger	AS563B		...	...	○|○	83203	89436
		S6009B		...	...	○|○	83203	89436
	RAR-221AS-11-USW, RAR-221AS-11-1-USW Trailer	1253069B000		...	...	○|○	85005	89430
		AS3069B		...	...	○|○	85005	89430
		AS30698		...	...	○|○	85005	89430
	RAR-221AS-12-USW, RAR-221AS-12-1-USW Trailer	1250546B000		...	...	○|○	85006	...
		AS546B		...	...	○|○	85006	...
	RAR-221 Tag Axle	AS563B		...	...	○|○	83203	89436
		AS789B		...	...	○|○	85014	...

APPLICATION GUIDE - TRUCKS, TRAILERS AND BUSES

Year Ano Année	Model Modelo Modle	OEM #		Front			Rear	
				Fleetline	GasSLX		Fleetline	GasSLX
RIDEWELL CORPORATION (CONT'D)								
TRAILER AIR-RIDES (cont'd)								
	RAR-221 Tag Axle	S5878B		...	...		83207	89407
		S6009B		...	...		83203	89436
	RAR-240, RAR-240W (Mono Pivot Trailers with HD Air Suspension)	1270563B000		...	...		85000	89436
		1270563B003		...	...		85934	...
		1270789B000		...	...		85014	...
	RAR-243 (Mono Pivot Trailers with HD Air Suspension)	1270563B003		...	...		85934	...
	RAR-260 Overslung Air Suspension (25,000 lb Capacity)	1270563B003		...	...		85934	...
	RAR-260 Underslung Air Suspension (25,000 lb and 30,000 lb Capacity)	1270563B003		...	...		85934	...
	RideLite Trailer Air Suspension	1270563B003		...	...		85934	...
TRUCK AIR-RIDES								
	Additional O.E.M. Interchanges	1250005		85901	...		...	...
		1254025B000		85712				
		1265478B000		85736				
		1267249B000		85712				
	Fire Truck with Ridewell Front Suspension	AS 4025B		85712	...		...	...
	Models with O.E.M. Number	90-1813		...	...		85712	...
		70654		...	...		85000	89436
		665198		...	...		85005	89430
		665267		...	...		85029	...
		680101		...	...		85702	...
		901813		...	...		85712	...
		1250563B000		...	...		85000	89436
		1253069B000		...	...		85005	89430
		1254190B000		...	...		85302	89420
		1265157B000		...	...		85712	...
		1266009B000		...	...		83130	...
		1267120B000		...	...		85734	...
		1267395B000		...	...		85302	89420
		1275813B000		...	...		85704	...
		AS575B		...	...		85005	89430
		S4025B		...	...		85712	...
		S5813B		...	...		85704	...
		S7120B		...	...		85304	...
		S7172B		...	...		83207	89407
		S7249B		...	...		85307	...
		S7365B		...	...		85305	...
	Pusher w/Axle Lift	AS563B		...	...		83203	89436
		S6009B		...	...		83203	89436
	RAD-221R Drive Axle	S2607B		...	...		85702	...
		S5477B		...	...		85307	...
	RCA-215 Models Air Suspension	1250789B000		...	...		85014	...
	RD-202B Tandem Drive Axle	S5478B		...	...		85307	...
	RD-202S-54-48-BS Tandem Drive Air Suspension	1252607B000		...	...		85702	...
	RD-202S-54-52T-SR Tandem Drive Air Suspension	1252607B000		...	...		85702	...
	RSS-236, RSS-236R Self Steering Tag/Pusher Lift Axle (For 13000 lb & 16000 lb Capacity)	1253069B000		...	...		85005	89430
		AS3069B		...	...		85005	89430
		AS30698		...	...		85005	89430
	RUA-220B-1-, 7, 7.5, 8, 8.5, 9, 9.5, 10 (Lift Tag Axle & Trailer Lift Suspension)	1270563B000		...	...		85000	89436
	RUA-220B-1-, 10, 10.5, 11, 11.5, 12, 12.5, 13 (Lift Tag Axle & Trailer Lift Suspension)	1250789B000		...	...		85014	...
		AS789B000		...	...		85014	...
ROADMASTER (MONACO)								
	Models with AD-123 Models Suspension (AD123-6,-8,-10,-8.75)	90045132		...	...		85909	...

APPLICATION GUIDE - TRUCKS, TRAILERS AND BUSES

Year Ano Année	Model Modelo Modle	OEM #		Front			Rear	
				Fleetline	GasSLX		Fleetline	GasSLX
	Models with O.E.M. Number	90045188		...	...	○|○	85910	...

SAFARI MOTOR COACH

CLASS A MOTORHOMES

95-00	Magnum Blue Max M Series w/ Velvet Ride Torsion	B462092	○|○	85910	...		...	...
		B462093		...	...	○|○	85058	89431
96-00	Magnum Air B Series (Air-Ride) (4 Units Req'd Front & Rear)	B462092	○|○	83126	89430		...	...
		.....		...	...	○|○	83126	89430
93-99	Magnum Bluestreak Leaf Spring	B462092	○|○	85910	...		...	...
		B462093		...	...	○|○	85058	89431

SAF HOLLAND

	Models with O.E.M. Number	90044989	○|○	85059				
	Self - Steering Axle Shocks	632155	○|○	646177				
		646201	○|○	646177				
		90045331	○|○	646155				

TRAILER AIR SUSPENSION

	AirLite 2 Model Trailer Air Suspension	90044025		...	...	○|○	83209	89414
	AR-41 Models Trailer Air Suspension	90044162		...	...	○|○	83128	89436
	AR-45 Models Trailer Air Suspension	90044162		...	...	○|○	83128	89436
	AR-50 Models Trailer Air Suspension	90044162		...	...	○|○	83128	89436
	AR-51 Models Trailer Air Suspension (AR51-US)	90044162		...	...	○|○	83128	89436
	AR-70 Models Trailer Air Suspension	90044626		...	...	○|○	83126	89430
	AR-75 Models Trailer Air Suspension	90044625		...	...	○|○	83125	...
		90044626		...	...	○|○	83126	89430
	AR-80 Models Trailer Air Suspension	90044046		...	...	○|○	83123	89405
		90044626		...	...	○|○	83126	89430
		90044868		...	...	○|○	85045	...
	AR-85-A Models Trailer Air Suspension	90044625		...	...	○|○	83125	...
	AR-90-1 Models Trailer Air Suspension	90044162		...	...	○|○	83128	89436
		90044448		...	...	○|○	85051	...
		90045054		...	...	○|○	85051	...
	AR-90 Models Trailer Air Suspension	90044089		...	...	○|○	83124	89407
	AR-92 Models Trailer Air Suspension	90044089		...	...	○|○	83124	89407
		90044162		...	...	○|○	83128	89436
		90044448		...	...	○|○	85051	...
		90044642		...	...	○|○	83127	...
		90044769		...	...	○|○	83207	89407
		90044794		...	...	○|○	83127	...
		90044992		...	...	○|○	85000	89436
		90045040		...	...	○|○	83130	...
		90045054		...	...	○|○	85051	...
	AR-93 Models Trailer Air Suspension	90044089		...	...	○|○	83124	89407
		90044448		...	...	○|○	85051	...
		90044642		...	...	○|○	83127	...
		90044769		...	...	○|○	83207	89407
		90044794		...	...	○|○	83127	...
		90045054		...	...	○|○	85051	...
	AR-95 Models Trailer Air Suspension	90044625		...	...	○|○	83125	...
	AR-120 Models Trailer Air Suspension	90044625		...	...	○|○	83125	...
		90044626		...	...	○|○	83126	89430
	AR-125 Models Trailer Air Suspension	90044625		...	...	○|○	83125	...
		90044626		...	...	○|○	83126	89430
	AR-165-US Models Trailer Air Suspension (AR165-US)	90044626		...	...	○|○	83126	89430
	AR-250 Models Trailer Air Suspension	90044089		...	...	○|○	83124	89407
		90044642		...	...	○|○	83127	...

SAF HOLLAND (CONT'D)

TRAILER AIR SUSPENSION (cont'd)

Year Ano Année	Model Modelo Modle	OEM #	Front Fleetline	Front GasSLX	Rear Fleetline	Rear GasSLX
	AR-250 Models Trailer Air Suspension	90045054	...	...	85051	...
	AR-955 Models Trailer Air Suspension (Liftaxle)	90044625	...	...	83125	...
	ARA-93 Models Trailer Air Suspension (ARA-93-14)	90045054	...	...	85051	...
	ARL20 Models Trailer Air Suspension (ARL20-D, ARL20-D-US)	90044162	...	...	83128	89436
	ARS112 Models Trailer Air Suspension (ARS112-6)	90045096	...	...	85916	89430
	ARU-92 Models Trailer Air Suspension	90044642	...	...	83127	...
	ARU-93 Models Trailer Air Suspension	90044642	...	...	83127	...
		90045040	...	...	83130	...
	ARU-98 Models Trailer Air Suspension	90045054	...	...	85051	...
	CB 25Y/CBX 25Y Models with Fusion Axle and Beam Assembly (7.0" Ride Height)	90044868	...	...	85045	...
	CB 25Y/CBX 25Y Models with Fusion Axle and Beam Assembly (8.0" Ride Height)	90045381	...	...	83150	...
	CB 25Y/CBX 25Y Models with Fusion Axle and Beam Assembly (9.0" Ride Height)	90045608	...	...	83363	...
	CB 25Y/CBX 25Y Models with Fusion Axle and Beam Assembly (10.0" Ride Height)	90044162	...	...	83128	89436
	CB 25Y/CBX 25Y Models with Fusion Axle and Beam Assembly (12.0" Ride Height)	90045040	...	...	83130	...
	CB-400/4000 Models Trailer Air Suspension	90044162	...	...	83128	89436
		90045040	...	...	83130	...
		90045298	...	...	83363	...
	CB-2300 Models Trailer Air Suspension	90044868	...	...	85045	...
		90045381	...	...	83150	...
	CB-2300 Models Trailer Air Suspension (16.0" & 17.0" Ride Height)	90045298	...	...	83363	...
	CBX 23 & CBX 25 Models Trailer Air Suspension (16.0" & 17.0" Ride Height)	90045298	...	...	83363	...
	CBX 23 Models Trailer Air Suspension	90044868	...	...	85045	...
		90045381	...	...	83150	...
	CBX 23 Models with 245 or 317 Fusion Axle and Beam Assembly	90045608	...	...	83363	...
	CBX 23U Models with 342 Fusion Axle and Beam Assembly (8.0" Ride Height)	90045608	...	...	83363	...
	CBX 23 with 245 or 317 Fusion Axle and Beam Assembly	90045299	...	...	83389	89436
	CBX 25 Models Trailer Air Suspension	90045040	...	...	83130	...
		90045607	...	...	83150	...
	CBX 25 Models with 245 or 338 Fusion Axle and Beam Assembly (15.0" Ride Height)	90045608	...	...	83363	...
	CBX 25U-4 Models with 342 Fusion Axle and Beam Assembly (9.0" Ride Height)	90045608	...	...	83363	...
	CBX 25 with 245 Fusion Axle and Beam Assembly (16.0" & 17.0" Ride Height)	90045299	...	...	83389	89436
	CBX 30 Models with 245 or 338 Fusion Axle and Beam Assembly (15.0" Ride Height)	90045608	...	...	83363	...
	CBX 30 with 245 Fusion Axle and Beam Assembly (16.0" & 17.0" Ride Height)	90045299	...	...	83389	89436
	CBX 40 Models Trailer Air Suspension	90044162	...	...	83128	89436
		90045040	...	...	83130	...
	CBX 40 Models with 265 Fusion Axle and Beam Assembly (15.5" & 16.0" Ride Height)	90045298	...	...	83363	...
	CBX 46 Models Trailer Air Suspension (16.5" & 17.0" Ride Height)	90044162	...	...	83128	89436
	CBX 46 Models Trailer Air Suspension (16" Ride Height)	90045298	...	...	83363	...
	CBX 50 Models Trailer Air Suspension (16.5" & 17.0" Ride Height)	90044162	...	...	83128	89436
	CBX 50 Models Trailer Air Suspension (16" Ride Height)	90045298	...	...	83363	...
	CBX 69 Trailer Air Suspension	90045669	...	...	83389	89436
	Models with O.E.M. Number	665454	...	...	85045	...
		671931	...	...	85916	89430
		680234	...	...	85906	89407
		680268	...	...	85323	89436
		90045000	...	...	85906	89407
		90045001	...	...	85323	89436
		90045002	...	...	85906	89407

SAF HOLLAND (CONT'D)

TRAILER AIR SUSPENSION (cont'd)

Year Ano Année	Model Modelo Modle	OEM #	Front Fleetline	Front GasSLX	Rear Fleetline	Rear GasSLX
	Models with O.E.M. Number	90045003	...	...	85323	89436
		90045083	...	...	85910	...
		90045188	...	...	85910	...
		90045207	...	...	89405	...
		90045433	...	...	85916	89430
		90045563	...	...	85014	...
		90045564	...	...	83128	89436
		90045572	...	...	85045	...
		90045574	...	...	83130	...
		90045575	...	...	85051	...
		90045576	...	...	83150	...
		90045665	...	...	85029	...
		90045667	...	...	85060	...
		XBSPN05336	...	...	83125	...
		XB-SPN-053-36	...	...	83125	...
	Models with O.E.M. Number (Hvy Duty)	90045666	...	...	85051	...
	Models with O.E.M. Number (STD)	90045666	...	...	83130	...
	NL-200 Models Non Steer - Auxiliary Lift Air Suspension	90044162	...	...	83128	89436
	NS-190 Models Trailer Air Suspension	90044162	...	...	83128	89436
		90045040	...	...	83130	...
		90045054	...	...	85051	...
	NS-400 Models Trailer Air Suspension	90044162	...	...	83128	89436
		90045040	...	...	83130	...
		90045298	...	...	83363	...
	NS-400 Models Trailer Air Suspension (17.0" Ride Height)	90045299	...	...	83389	89436
	NS-450 Models Trailer Air Suspension	90044162	...	...	83128	89436
		90045040	...	...	83130	...
		90045298	...	...	83363	...
	NS-450 Models Trailer Air Suspension (17.0" Ride Height)	90045299	...	...	83389	89436
	RL-196A Models Trailer Air Suspension	90044162	...	...	83128	89436
		90044794	...	...	83127	...
		90045040	...	...	83130	...
	RL-196 Models Trailer Air Suspension	90044978	...	...	85059	...
		90044979	...	...	83113	...
	RL-228 Models Trailer Air Suspension	90044089	...	...	83124	89407
		90044162	...	...	83128	89436
		90044642	...	...	83127	...
	RL-230 Models Trailer Air Suspension	90044089	...	...	83124	89407
		90044642	...	...	83127	...
		90045381	...	...	83150	...
	RL-230 Models Trailer Air Suspension (Hanger Mounted Shock)	90045040	...	...	83130	...
		90045299	...	...	83389	89436
		90045381	...	...	83150	...
	RL-230 Models Trailer Air Suspension (Single Stud Air Spring)	90044089	...	...	83124	89407
		90044642	...	...	83127	...
	RL-250 Models Trailer Air Suspension (Shock Below Frame)	90045040	...	...	83130	...
		90045299	...	...	83389	89436
	RL-250 Models Trailer Air Suspension (Std Suspension)	90044089	...	...	83124	89407
		90044642	...	...	83127	...
		90045054	...	...	85051	...
	RL-300 Models Trailer Air Suspension (Offset Stud Air Spring)	90045054	...	...	85051	...
		90045338	...	...	85060	...
	RL-300 Models Trailer Air Suspension (Std Suspension)	90045054	...	...	85051	...
		90045338	...	...	85060	...

SAF HOLLAND (CONT'D)

TRAILER AIR SUSPENSION (cont'd)

Year Ano Année	Model Modelo Modle	OEM #		Front Fleetline	Front GasSLX		Rear Fleetline	Rear GasSLX
	RLSA228 Models Trailer Air Suspension (RLSA-228-4214, -4215, -4216, -4814, -4815, -4816)	90044642		...	...	O|O	83127	...
	RLSA228 Models Trailer Air Suspension (RLSA-228-4217, -4817)	90044089		...	...	O|O	83124	89407
	RLSA Models Trailer Air Suspension (RLSA-4214, -4215, -4814, -4815)	90044978		...	...	O|O	85059	...
	RLSA Models Trailer Air Suspension (RLSA-4216, -4217, -4816, -4817)	90044979		...	...	O|O	83113	...
	RLU-228 Models Trailer Air Suspension	90044089		...	...	O|O	83124	89407
		90044626		...	...	O|O	83126	89430
		90044642		...	...	O|O	83127	...
		90045040		...	...	O|O	83130	...
	RLU-228 Models Trailer Air Suspension (Axle Mounted Shock Suspension)	90044162		...	...	O|O	83128	89436
		90044642		...	...	O|O	83127	...
	RLU-228 Models Trailer Air Suspension (Current Production - w/3" Axle Travel Up)	90044162		...	...	O|O	83128	89436
		90044642		...	...	O|O	83127	...
		90045040		...	...	O|O	83130	...
		90045054		...	...	O|O	85051	...
		90045298		...	...	O|O	83363	...
	RLU-228 Models Trailer Air Suspension (Current Production - w/4" Axle Travel Up)	90044162		...	...	O|O	83128	89436
		90044626		...	...	O|O	83126	89430
		90044642		...	...	O|O	83127	...
	RLU-228 Models Trailer Air Suspension (Current Production - w/4" Axle Travel Up) HVY DTY	90045337		...	...	O|O	85911	...
	RLU-250 Models Trailer Air Suspension	90044162		...	...	O|O	83128	89436
		90044642		...	...	O|O	83127	...
		90045381		...	...	O|O	83150	...
	RLU-250 Models Trailer Air Suspension (Frame Mount Suspension)	90044162		...	...	O|O	83128	89436
		90045054		...	...	O|O	85051	...
		90045381		...	...	O|O	83150	...
	RLU-300 Models Trailer Air Suspension (Std Suspension)	90045337		...	...	O|O	85911	...
		90045471		...	...	O|O	83150	...
	Trailer Air Suspension (RL196-16,-17)	90044979		...	...	O|O	83113	...

TRUCK, BUS & MOTORHOME AIR SUSPENSIONS

00-21	AD-246 Models with 10" Ride Height	90045504		...	...	O|O	85030	89440
00-21	AD-369 Models with 10" Ride Height	90045504		...	...	O|O	85030	89440
10-23	ADZ-123 Models Truck and Bus Air Suspension	90045605		...	...	O|O	85109	...
		90045803		...	...	O|O	85109	...
		90045812		...	...	O|O	85109	...
10-23	ADZ-126 Models Truck and Bus Air Suspension	90045605		...	...	O|O	85109	...
		90045803		...	...	O|O	85109	...
		90045812		...	...	O|O	85109	...
10-23	ADZ-246 Models Truck and Bus Air Suspension	90045605		...	...	O|O	85109	...
		90045803		...	...	O|O	85109	...
		90045812		...	...	O|O	85109	...
10-23	ADZ-252 Models Truck and Bus Air Suspension	90045605		...	...	O|O	85109	...
		90045803		...	...	O|O	85109	...
		90045812		...	...	O|O	85109	...
10-23	ADZ-369 Models Truck and Bus Air Suspension	90045605		...	...	O|O	85109	...
		90045803		...	...	O|O	85109	...
		90045812		...	...	O|O	85109	...
10-23	ADZ-378 Models Truck and Bus Air Suspension	90045605		...	...	O|O	85109	...
		90045803		...	...	O|O	85109	...
		90045812		...	...	O|O	85109	...
	AD-123 Models Truck and Tractor Air Suspension (AD123-6,-8,-10,-8.75)	90045099		...	...	O|O	85906	89407

SAF HOLLAND (CONT'D)

TRUCK, BUS & MOTORHOME AIR SUSPENSIONS (cont'd)

Year Ano Année	Model Modelo Modle	OEM #	Front Fleetline	Front GasSLX	Rear Fleetline	Rear GasSLX
	AD-123 Models Truck and Tractor Air Suspension (AD123-6,-8,-10,-8.75)	90045132	...	...	85909	...
	AD-130 Models Truck and Tractor Air Suspension (AD123-6,-8,-10,-8.75)	90045466	...	...	89406	...
	AD-130 Models Truck and Tractor Air Suspension W/ OEM Number	90045432	...	...	85321	...
	AD-150 Models Truck & Tractor Air Suspension	90045075	...	...	85911	...
	AD-200 Models Truck & Tractor Air Suspension (AD-200-7, -8, -9, -11)	90045138	...	...	85910	...
	AD-246 Models Truck & Tractor Air Suspension (AD246 -6, -8, -10, -8.75)	90045099	...	...	85906	89407
		90045132	...	...	85909	...
	AD-252-10 Tandem Axle	90045132	...	...	85909	...
	ARD-120 Models Truck & Tractor Air Suspension	90044025	...	...	83209	89414
	ARD-125 Models Truck & Tractor Air Suspension	90044011	...	...	85004	...
		90044016	...	...	85300	89419
		90044025	...	...	83209	89414
	ARD-165 Models Truck & Tractor Air Suspension	90044011	...	...	85004	...
	ARD-190 Models Truck & Tractor Air Suspension (ARD-190-B)	90044016	...	...	85300	89419
	ARD-234 Models Truck & Tractor Air Suspension (ARD-234-6)	90044046	...	...	83123	89405
	ARD-238 Models Truck & Tractor Air Suspension (ARD-238-6)	90044025	...	...	83209	89414
	ARD-244 Models Truck & Tractor Air Suspension	90044011	...	...	85004	...
		90044016	...	...	85300	89419
		90044025	...	...	83209	89414
	ARDAB-120 Models Truck & Tractor Air Suspension (ARDAB-120-5)	90044907	...	...	83635	...
	ARDAB-238-5 Models Truck & Tractor Air Suspension	90044907	...	...	83635	...
	ARDAB-240 Models Truck & Tractor Air Suspenion (ARDAB-240-5)	90044907	...	...	83635	...
	ARDST-123 Models Truck & Tractor Air Suspension (ARDST-123-6, ARDSTM/L-123-6)	90044025	...	...	83209	89414
	ARDST-244 Models Truck & Tractor Air Suspension (ARDST-244-6)	90044025	...	...	83209	89414
	ARDST-246 Models Truck & Tractor Air Suspension (ARDST-246-6, ARDSTM/L-246-6)	90044025	...	...	83209	89414
	ARDST-250-6 Models Truck & Tractor Air Suspension	90044025	...	...	83209	89414
	ARDTB-125-6A (Note: Rear shock)	90045053	...	...	85908	...
	ARDTB-125 Models Bus Air Suspension (ARDTB-125-6A)	90044448	...	...	85051	...
	ART-500 Models Truck & Tractor Tag Axle Air Suspension	90044008	...	...	85000	89436
		90044162	...	...	83128	89436
	ART-505 Models Truck & Tractor Tag Axle Air Suspension	90044162	...	...	83128	89436
	ART-541 Models Truck & Tractor Tag Axle Air Suspension	90044162	...	...	83128	89436
	ART-550 Models Truck & Tractor Tag Axle Air Suspension	90044012	...	...	85006	...
	ART-551 Models Truck & Tractor Tag Axle Air Suspension	90044017	...	...	83204	...
		90044162	...	...	83128	89436
	ART-555 Models Truck & Tractor Tag Axle Air Suspension	90044162	...	...	83128	89436
		90044642	...	...	83127	...
	Models with Neway AS140 w/ 14,000 lb Front Suspension	90045455	...	...	85909	...
	Models with O.E.M. Number	665002	...	...	85004	...
		665003	...	...	85300	89419
		671921	...	...	85916	89430
		671922	...	...	89405	...
		671923	...	...	89440	...
		680645	...	...	85321	...
		90045277	...	...	85030	89440
		90045336	...	...	85014	...
		90045418	...	...	85916	89430
		90045419	...	...	89405	...
		90045420	...	...	89440	...
		90045500	...	...	89430	...
		90045503	...	...	89430	...
		90045504	...	...	85030	89440

Year Ano Année	Model Modelo Modle	OEM #		Front			Rear	
				Fleetline	GasSLX		Fleetline	GasSLX

SAF HOLLAND (CONT'D)

TRUCK, BUS & MOTORHOME AIR SUSPENSIONS (cont'd)

	Models with O.E.M. Number	90045532		...	...	O|O	85030	89440
		90045534		...	...	O|O	85014	...
		90045536		...	...	O|O	89414	...
		90045568		...	...	O|O	85060	...
		471700000436		...	...	O|O	85030	89440
		471700000458		...	...	O|O	85014	...
		471700000459		...	...	O|O	85030	89440
		471700000461		...	...	O|O	89414	...
		481700000483		...	...	O|O	89430	...
		481700000485		...	...	O|O	89430	...

TRUCK & TRACTOR AIR SUSPENSION (TAG AXLE)

	Models with O.E.M. Number	6025		...	...	O|O	83122	89406
		6026		...	...	O|O	83204	...
		57639		...	...	O|O	85000	89436
		57643		...	...	O|O	85013	89414
		665197		...	...	O|O	85051	...
		665514		...	...	O|O	83127	...
		665969		...	...	O|O	89430	...
		90044001		...	...	O|O	85005	89430
		90044071		...	...	O|O	85000	89436
		90044081		...	...	O|O	85000	89436
		90044086		...	...	O|O	85000	89436
		90044089C		...	...	O|O	83124	89407
		90044095		...	...	O|O	83203	89436
		90044679		...	...	O|O	83122	89406
		90044680		...	...	O|O	83125	...
		90044681		...	...	O|O	83204	...
		90044682		...	...	O|O	83209	89414
		90044683		...	...	O|O	83122	89406
		90044684		...	...	O|O	83124	89407
		90044685		...	...	O|O	83389	89436
		90044686		...	...	O|O	85051	...
		90044687		...	...	O|O	83125	...
		90044688		...	...	O|O	83122	89406
		90044770		...	...	O|O	83207	89407
		90044833		...	...	O|O	85052	...
		90044834		...	...	O|O	85052	...
		90044878		...	...		83635	...
		90044915		...	...	O|O	83127	...
		90044981		...	...	O|O	85000	89436
		90044982		...	...	O|O	85000	89436
		90044991		...	...	O|O	85000	89436
		90045110		...	...	O|O	83137	...
		90045175		...	...	O|O	85916	89430
		90045384		...	...	O|O	85916	89430
		AR134C		...	...	O|O	85005	89430
		AR718C		...	...	O|O	83203	89436
		AR718CHD		...	...	O|O	85000	89436
		AR781		...	...	O|O	83203	89436
		AR958		...	...	O|O	83207	89407
		AR995		...	...	O|O	85734	...
		AR1008		...	...	O|O	85006	...
		AR1141		...	...	O|O	83204	...

Year Ano Année	Model Modelo Modle	OEM #		Front			Rear	
				Fleetline	GasSLX		Fleetline	GasSLX
SAF HOLLAND (CONT'D)								
TRUCK & TRACTOR AIR SUSPENSION (TAG AXLE) (cont'd)								
	Models with O.E.M. Number	AR1141C		...	...	O|O	83204	...
		AR1202		...	...	O|O	85300	89419
		AR1404		...	...	O|O	85301	...
		AR1425		...	...	O|O	85301	...
		AR1434		...	...	O|O	83203	89436
		AR1654		...	...	O|O	83209	89414
		AR1822		...	...	O|O	85304	...
		AR2451		...	...	O|O	83203	89436
		AR2598		...	...	O|O	83123	89405
		AR-134-C		...	...	O|O	85005	89430
		AR-718-C		...	...	O|O	83203	89436
		AR-718-C-HD		...	...	O|O	85000	89436
		AR-781		...	...	O|O	83203	89436
		AR-958		...	...	O|O	83207	89407
		AR-995		...	...	O|O	85734	...
		AR-1008		...	...	O|O	85006	...
		AR-1141		...	...	O|O	83204	...
		AR-1141-C		...	...	O|O	83204	...
		AR-1202		...	...	O|O	85300	89419
		AR-1404		...	...	O|O	85301	...
		AR-1425		...	...	O|O	85301	...
		AR-1434		...	...	O|O	83203	89436
		AR-1654		...	...	O|O	83209	89414
		AR-1822		...	...	O|O	85304	...
		AR-2451		...	...	O|O	83203	89436
		AR-2598		...	...	O|O	83123	89405
SEAGRAVE FIRE APPARATUS LLC								
	Models with Marauder II chassis	P2598000	O|O	85712	...		...	...
	Models with O.E.M. Number	680117		...	...	O|O	85300	89419
		P0025500		...	...	O|O	85300	89419
SHASTA RV								
ALL MODELS								
	MotorHomes with Ford E350 Chassis	8C2Z18124D	–|O	G63622	...		...	...
		8C2Z18125D		...	...	–|O	G63623	...
		8C2Z-18124-D	–|O	G63622	...		...	...
		8C2Z-18125-D		...	...	–|O	G63623	...
		8C24-18045-DA	–|O	G63622	...		...	...
		8C24-18080-DB		...	...	–|O	G63623	...
		8C2418045DA	–|O	G63622	...		...	...
		8C2418080DB		...	...	–|O	G63623	...
		ASH1136		...	...	–|O	G63623	...
		ASH1154	–|O	G63622	...		...	...
		ASH-1136		...	...	–|O	G63623	...
		ASH-1154	–|O	G63622	...		...	...
		AT163G	–|O	G63622	...		...	...
		AT164G		...	...	–|O	G63623	...
		AT-163G	–|O	G63622	...		...	...
		AT-164G		...	...	–|O	G63623	...
	MotorHomes with Ford E450 Chassis	8C2Z18124D	–|O	G63622	...		...	...
		8C2Z18125D		...	...	–|O	G63623	...
		8C2Z-18124-D	–|O	G63622	...		...	...

APPLICATION GUIDE - TRUCKS, TRAILERS AND BUSES

Year Ano Année	Model Modelo Modle	OEM #		Front			Rear	
				Fleetline	GasSLX		Fleetline	GasSLX
SHASTA RV (CONT'D)								
ALL MODELS (cont'd)								
	MotorHomes with Ford E450 Chassis	8C2Z-18125-D		...	...	−|O	**G63623**	...
		8C24-18045-DA	−|O	**G63622**	...		...	...
		8C24-18080-DB		...	...	−|O	**G63623**	...
		8C2418045DA	−|O	**G63622**	...		...	...
		8C2418080DB		...	...	−|O	**G63623**	...
		ASH1136		...	...	−|O	**G63623**	...
		ASH1154	−|O	**G63622**	...		...	...
		ASH-1136		...	...	−|O	**G63623**	...
		ASH-1154	−|O	**G63622**	...		...	...
		AT163G	−|O	**G63622**	...		...	...
		AT164G		...	...	−|O	**G63623**	...
		AT-163G	−|O	**G63622**	...		...	...
		AT-164G		...	...	−|O	**G63623**	...
SICARD								
	Models with O.E.M. Number	3166657	O|O	**85700**	...		...	...
SOUTHERN COACH								
	Early Model Air Suspension	.....	O|O	**85304**	...		...	...
SPARTAN MOTORS								
ALPINE								
97-00	MotorHome Chassis with O.E.M. Number	0377SS5		...	...	O|O	**85029**	...
		0377-SS5		...	...	O|O	**85029**	...
		1300B46		...	...	O|O	**85029**	...
		B46-1725		...	...	O|O	**85029**	...
		B461725		...	...	O|O	**85029**	...
HIGHLANDER								
97-00	With I Beam Front Suspension	B461731	O|O	**85909**	...		...	...
		B461732		...	...	O|O	**85030**	89440
		B462150	O|O	**85909**	...		...	...
		B462151		...	...	O|O	**85030**	89440
K2								
97-00	Models with O.E.M. Number	2200201		...	...	O|O	**85007**	...
		B46-2151		...	...	O|O	**85007**	...
		B462151		...	...	O|O	**85007**	...
97-00	With I Beam Front Suspension	B461731	O|O	**85909**	...		...	...
		B461732		...	...	O|O	**85030**	89440
		B462150	O|O	**85909**	...		...	...
		B462151		...	...	O|O	**85030**	89440
97-00	With Independent Front Granning Suspension	B462151		...	...	O|O	**85030**	89440
		B462385		...	...	O|O	**85030**	89440
MOTORHOME								
91-92	MC 2000 With I Beam Front Suspension	B461593	O|O	**85909**	...		...	...
91-92	Models with Tuthill 102 AR Air Suspension	0346SS5		...	...	O|O	**85013**	89414
		0346-SS5		...	...	O|O	**85013**	89414
		B46-1594		...	...	O|O	**85013**	89414
		B461594		...	...	O|O	**85013**	89414
		B462502		...	...	O|O	**85013**	89414
MOUNTAIN MASTER								
95-00	With I Beam Front Suspension	B461731	O|O	**85909**	...		...	...

Year Ano Année	Model Modelo Modle	OEM #		Front			Rear	
				Fleetline	GasSLX		Fleetline	GasSLX
SPARTAN MOTORS (CONT'D)								
MOUNTAIN MASTER (cont'd)								
95-00	With I Beam Front Suspension	B461732		...	...	○|○	85030	89440
		B462150	○|○	85909	...		...	...
		B462151		...	...	○|○	85030	89440
97-00	Models with O.E.M. Number	2200201		...	...	○|○	85007	...
		B46-2151		...	...	○|○	85007	...
		B462151		...	...	○|○	85007	...
97-00	With Independent Front Granning Suspension	B462151		...	...	○|○	85030	89440
		B462385		...	...	○|○	85030	89440
93-95	MC 2000 With I Beam Front Suspension	B461593	○|○	85909	...		...	...
93-95	Models with Tuthill 102 AR Air Suspension	0346SS5		...	...	○|○	85013	89414
		0346-SS5		...	...	○|○	85013	89414
		B46-1594		...	...	○|○	85013	89414
		B461594		...	...	○|○	85013	89414
		B462502		...	...	○|○	85013	89414
CLASS A MOTORHOMES								
00-12	Summit (19000 - 22000 GVW)	B461725	○|○	85910	...		...	...
K2								
91-95	Models with Tuthill 102 AR Air Suspension	0346SS5		...	...	○|○	85030	89440
		0346-SS5		...	...	○|○	85030	89440
		B46-1594		...	...	○|○	85030	89440
		B461594		...	...	○|○	85030	89440
		B462502		...	...	○|○	85030	89440
95-96	Models with I Beam Front Suspension	B461731	○|○	85909	...		...	...
		B461732		...	...	○|○	85030	89440
		B462150	○|○	85909	...		...	...
		B462151		...	...	○|○	85030	89440
97-00	Summit MotorHome Chassis with O.E.M. Number	0377SS5		...	...	○|○	85029	...
		0377-SS5		...	...	○|○	85029	...
		1300B46		...	...	○|○	85029	...
		B46-1725		...	...	○|○	85029	...
		B461725		...	...	○|○	85029	...
1986	Fire Truck with Ridewell Front Suspension	AS 4025B	○|○	85712	...		...	...
	Additional O.E.M. Interchanges	78068	○|○	85304				
	Buses with Hendrickson Softek Suspension with Drum and Disc Brakes	58913-009	○|○	85959	...		...	...
		58913-009L	○|○	85959	...		...	...
		58913009	○|○	85959	...		...	...
		58913009L	○|○	85959	...		...	...
		471700000456	○|○	85959	...		...	...
	Chassis With Hendrickson HTS 210 Suspension (Type C School Bus Applications)	60665-025		...	...	○|○	85036	89405
		60665-025L		...	...	○|○	85036	89405
		60665025L		...	...	○|○	85036	89405
	Fire Truck with O.E.M. Number	0272SS5	○|○	85712	...		...	...
		0272-SS5	○|○	85712	...		...	...
	Fire Truck with Ridewell Suspension RD 202 52000	S2607B		...	...	○|○	85702	...
	Models with O.E.M. Number	59011	○|○	83214	...		...	...
	Models with Reyco 1200 Steer Option)	21310-01	○|○	85307	...		...	...
		2131001	○|○	85307	...		...	...
	Motorhome chassis with Ridewell Front Suspension	AS 4025B	○|○	85712	...		...	...
RV MODELS								
	RV Models with Primaax Air Suspensions	60665-014		...	...	○|○	85962	...

Year Ano Année	Model Modelo Modle	OEM #		Front			Rear	
				Fleetline	GasSLX		Fleetline	GasSLX
SPARTAN MOTORS (CONT'D)								
RV MODELS (cont'd)								
	RV Models with Primaax Air Suspensions	60665-014L		...	...	O|O	85962	...
		60665014		...	...	O|O	85962	...
		60665014L		...	...	O|O	85962	...
SPRING VALLEY								
	SS120 Steering Stabilizer	632155	O|O	646177				
	SS130L Steering Stabilizer	632155	O|O	646177				
STARCRAFT BUS CO.								
ALLSTAR XL & XLT - SERIES								
04-11	Models with F-650 chassis with 22,000 lb Multi-leaf Rear Springs	4C4Z18125B		...	...	–|O	83317	...
		4C4Z-18125-B		...	...	–|O	83317	...
		501906C92		...	...	–|O	83317	...
		ASH24661		...	...	–|O	83317	...
00-15	Models with F-650 chassis with 10,000 lb Front Suspension	4C4Z18124QA	O|O	83175	...		...	...
		4C4Z-18124-QA	O|O	83175	...		...	...
		3584116C1	O|O	83175	...		...	...
		3584116C2	O|O	83175	...		...	...
		AA616	O|O	83175	...		...	...
		AA-616	O|O	83175	...		...	...
00-15	Models with F-650 chassis with 12,000 & 13,200 lb Front Springs	4C4Z18124JB	O|O	85928	...		...	...
		4C4Z18124RA	O|O	85928	...		...	...
		4C4Z-18124-JB	O|O	85928	...		...	...
		4C4Z-18124-RA	O|O	85928	...		...	...
		3584118C2	O|O	85928	...		...	...
		AA617	O|O	85928	...		...	...
		AA-617	O|O	85928	...		...	...
		AT812	O|O	85928	...		...	...
		AT-812	O|O	85928	...		...	...
15-23	Models with F-650 chassis with 13,500, 15,500 & 19,000 lb Multi-leaf Rear Springs From 07/15	471700011531		...	...	O|O	85180	...
		ASH24660		...	...	O|O	85180	...
		ASH-24660		...	...	O|O	85180	...
		FC4Z18125A		...	...	O|O	85180	...
		FC4Z-18125-A		...	...	O|O	85180	...
		FC44-18080-AB		...	...	O|O	85180	...
		FC4418080AB		...	...	O|O	85180	...
15-23	Models with F-650 chassis with 19.5" or 22.5" Wheels (22,000 lb GVW) From 07/15	471700011530	O|O	85181	...		...	...
		ASH24658	O|O	85181	...		...	...
		ASH24659	O|O	85181	...		...	...
		ASH-24658	O|O	85181	...		...	...
		ASH-24659	O|O	85181	...		...	...
		FC4Z18124A	O|O	85181	...		...	...
		FC4Z18124B	O|O	85181	...		...	...
		FC4Z-18124-A	O|O	85181	...		...	...
		FC4Z-18124-B	O|O	85181	...		...	...
		FC44-18045-BB	O|O	85181	...		...	...
		FC4418045BB	O|O	85181	...		...	...
2015	Models with F-650 chassis with 21,000 lb Rear Air Suspension To 2015	4C4Z18125DA		...	...	O|O	85926	...
		4C4Z-18125-DA		...	...	O|O	85926	...
		3578858C1		...	...	O|O	85926	...
		3578858C2		...	...	O|O	85926	...
E350 & E450 FORD CHASSIS MODELS								
	Allstar Series Shuttle buses with Ford E350 & E450 Chassis To 2020	ASH-1136		...	...	–|O	G63623	...

Year Ano Année	Model Modelo Modle	OEM #		Front			Rear	
				Fleetline	GasSLX		Fleetline	GasSLX
STARCRAFT BUS CO. (CONT'D)								
E350 & E450 FORD CHASSIS MODELS (cont'd)								
	Allstar Series Shuttle buses with Ford E350 & E450 Chassis To 2022	ASH-1154	−|○	**G63622**	...		...	...
	MVP Series Shuttle buses with Ford E450 Chassis To 2020	ASH-1136		...	...	−|○	**G63623**	...
	MVP Series Shuttle buses with Ford E450 Chassis To 2022	ASH-1154	−|○	**G63622**	...		...	...
	Starlite Series Shuttle buses with Ford E350 & E450 Chassis To 2020	ASH-1136		...	...	−|○	**G63623**	...
	Starlite Series Shuttle buses with Ford E350 & E450 Chassis To 2022	ASH-1154	−|○	**G63622**	...		...	...
	Starquest Series Shuttle buses with Ford E350 & E450 Chassis To 2020	ASH-1136		...	...	−|○	**G63623**	...
	Starquest Series Shuttle buses with Ford E350 & E450 Chassis To 2022	ASH-1154	−|○	**G63622**	...		...	...
	Ultra Star Series Shuttle buses with Ford E450 Chassis To 2020	ASH-1136		...	...	−|○	**G63623**	...
		ASH-1154	−|○	**G63622**	...		...	...
	Xpress Series Shuttle buses with Ford E350 & E450 Chassis To 2020	ASH-1136		...	...	−|○	**G63623**	...
		ASH-1154	−|○	**G63622**	...		...	...
STERLING TRUCK								
A9500								
99-03	Models with 12000 lb Taperleaf Front Suspension	10-13205-000	○|○	**85918**	**89449**		...	...
		1013205000	○|○	**85918**	**89449**		...	...
		471700131646	○|○	**85918**	**89449**		...	...
99-10	All Models with 12000 lb, 13200 lb or 14600 lb Axle and 60" Taperleaf Spring	F6HT18045EB	○|○	**85055**	**89439**		...	...
		F6HT18045EC	○|○	**85055**	**89439**		...	...
		F6HT-18045-EB	○|○	**85055**	**89439**		...	...
		F6HT-18045-EC	○|○	**85055**	**89439**		...	...
99-10	All Models with 23000 lb Axle and 52" Taperleaf Softride Rear Suspension	F6HT18080CA		...	...	○|○	**85314**	**89425**
		F6HT-18080-CA		...	...	○|○	**85314**	**89425**
99-10	All with 13200 lb or 14600 lb Axle and 54" Taperleaf Spring	F6HT18045GC	○|○	**85030**	**89440**		...	...
		F6HT-18045-GC	○|○	**85030**	**89440**		...	...
99-10	Models with 8500 or 9000 lb Axle and 54" Taperleaf Spring	F6HT18045HB	○|○	**85054**	...		...	...
		F6HT18045HC	○|○	**85054**	...		...	...
		F6HT-18045-HB	○|○	**85054**	...		...	...
		F6HT-18045-HC	○|○	**85054**	...		...	...
99-10	Models with 10000 lb or 12000 lb Axle and 54" Taperleaf Spring	F6HT18045AC	○|○	**85054**	...		...	...
		F6HT-18045-AC	○|○	**85054**	...		...	...
99-10	Models with 12000 or 13200 lb Axle and 54" Multileaf Spring	F6HT18045BC	○|○	**85047**	**89435**		...	...
		F6HT-18045-BC	○|○	**85047**	**89435**		...	...
99-10	Models with 14600 lb or 16000 lb Axle and 54"Multi-leaf Spring	F6HT18045CC	○|○	**85055**	**89439**		...	...
		F6HT-18045-CC	○|○	**85055**	**89439**		...	...
99-10	Models with FAS II (40,000 lb) Rear Air Suspension	16-13957-000		...	...	○|○	**85724**	**89443**
		16-15817-000		...	...	○|○	**85724**	**89443**
		680339		...	...	○|○	**85724**	**89443**
		680611		...	...	○|○	**85724**	**89443**
		1613957000		...	...	○|○	**85724**	**89443**
		1615817000		...	...	○|○	**85724**	**89443**
99-10	Models with Hendrickson 40LH Model Tandem Axle	57241-2		...	...		**83109**	...
		572412		...	...		**83109**	...
99-10	Models with Hendrickson HAS Rear Air Suspension	47902-28		...	...	○|○	**85013**	**89414**
		4790228		...	...	○|○	**85013**	**89414**
		F6HT18080FC		...	...	○|○	**85013**	**89414**
		F6HT-18080-FC		...	...	○|○	**85013**	**89414**
A9513								
99-01	All Models with 12000 lb, 13200 lb or 14600 lb Axle and 60" Taperleaf Spring	F6HT18045EB	○|○	**85055**	**89439**		...	...
		F6HT18045EC	○|○	**85055**	**89439**		...	...
		F6HT-18045-EB	○|○	**85055**	**89439**		...	...
		F6HT-18045-EC	○|○	**85055**	**89439**		...	...

STERLING TRUCK (CONT'D)

A9513 (cont'd)

Year Ano Année	Model Modelo Modle	OEM #		Front			Rear	
				Fleetline	GasSLX		Fleetline	GasSLX
99-01	All Models with 23000 lb Axle and 52" Taperleaf Softride Rear Suspension	F6HT18080CA		...	...	O|O	85314	89425
		F6HT-18080-CA		...	...	O|O	85314	89425
99-01	All with 13200 lb or 14600 lb Axle and 54" Taperleaf Spring	F6HT18045GC	O|O	85030	89440		...	...
		F6HT-18045-GC	O|O	85030	89440		...	...
99-01	Models with 8500 or 9000 lb Axle and 54" Taperleaf Spring	F6HT18045HB	O|O	85054	...		...	...
		F6HT18045HC	O|O	85054	...		...	...
		F6HT-18045-HB	O|O	85054	...		...	...
		F6HT-18045-HC	O|O	85054	...		...	...
99-01	Models with 10000 lb or 12000 lb Axle and 54" Taperleaf Spring	F6HT18045AC	O|O	85054	...		...	...
		F6HT-18045-AC	O|O	85054	...		...	...
99-01	Models with 12000 lb Taperleaf Front Suspension	10-13205-000	O|O	85918	89449		...	...
		1013205000	O|O	85918	89449		...	...
		471700131646	O|O	85918	89449		...	...
99-01	Models with 12000 or 13200 lb Axle and 54" Multileaf Spring	F6HT18045BC	O|O	85047	89435		...	...
		F6HT-18045-BC	O|O	85047	89435		...	...
99-01	Models with 14600 lb or 16000 lb Axle and 54"Multi-leaf Spring	F6HT18045CC	O|O	85055	89439		...	...
		F6HT-18045-CC	O|O	85055	89439		...	...
99-01	Models with FAS II (40,000 lb) Rear Air Suspension	16-13957-000		...	...	O|O	85724	89443
		16-15817-000		...	...	O|O	85724	89443
		680339		...	...	O|O	85724	89443
		680611		...	...	O|O	85724	89443
		1613957000		...	...	O|O	85724	89443
		1615817000		...	...	O|O	85724	89443
99-01	Models with Hendrickson 40LH Model Tandem Axle	57241-2		...	...		83109	...
		572412		...	...		83109	...
99-01	Models with Hendrickson HAS Rear Air Suspension	47902-28		...	...	O|O	85013	89414
		4790228		...	...	O|O	85013	89414
		F6HT-18080-FC		...	...	O|O	85013	89414

A9522

1999	All Models with 12000 lb, 13200 lb or 14600 lb Axle and 60" Taperleaf Spring	F6HT18045EB	O|O	85055	89439		...	...
		F6HT18045EC	O|O	85055	89439		...	...
		F6HT-18045-EB	O|O	85055	89439		...	...
		F6HT-18045-EC	O|O	85055	89439		...	...
1999	All Models with 23000 lb Axle and 52" Taperleaf Softride Rear Suspension	F6HT18080CA		...	...	O|O	85314	89425
		F6HT-18080-CA		...	...	O|O	85314	89425
1999	All with 13200 lb or 14600 lb Axle and 54" Taperleaf Spring	F6HT18045GC	O|O	85030	89440		...	...
		F6HT-18045-GC	O|O	85030	89440		...	...
1999	Models with 8500 or 9000 lb Axle and 54" Taperleaf Spring	F6HT18045HB	O|O	85054	...		...	...
		F6HT18045HC	O|O	85054	...		...	...
		F6HT-18045-HB	O|O	85054	...		...	...
		F6HT-18045-HC	O|O	85054	...		...	...
1999	Models with 10000 lb or 12000 lb Axle and 54" Taperleaf Spring	F6HT18045AC	O|O	85054	...		...	...
		F6HT-18045-AC	O|O	85054	...		...	...
1999	Models with 12000 lb Taperleaf Front Suspension	10-13205-000	O|O	85918	89449		...	...
		1013205000	O|O	85918	89449		...	...
		471700131646	O|O	85918	89449		...	...
1999	Models with 12000 or 13200 lb Axle and 54" Multileaf Spring	F6HT18045BC	O|O	85047	89435		...	...
		F6HT-18045-BC	O|O	85047	89435		...	...
1999	Models with 14600 lb or 16000 lb Axle and 54"Multi-leaf Spring	F6HT18045CC	O|O	85055	89439		...	...
		F6HT-18045-CC	O|O	85055	89439		...	...
1999	Models with FAS II (40,000 lb) Rear Air Suspension	16-13957-000		...	...	O|O	85724	89443
		16-15817-000		...	...	O|O	85724	89443
		680339		...	...	O|O	85724	89443

Year Ano Année	Model Modelo Modle	OEM #		Front			Rear	
				Fleetline	GasSLX		Fleetline	GasSLX
STERLING TRUCK (CONT'D)								
A9522 (cont'd)								
1999	Models with FAS II (40,000 lb) Rear Air Suspension	680611		...	...	○|○	85724	89443
		1613957000		...	...	○|○	85724	89443
		1615817000		...	...	○|○	85724	89443
1999	Models with Hendrickson 40LH Model Tandem Axle	57241-2		...	...		83109	...
		572412		...	...		83109	...
1999	Models with Hendrickson HAS Rear Air Suspension	47902-28		...	...	○|○	85013	89414
		4790228		...	...	○|○	85013	89414
		F6HT18080FC		...	...	○|○	85013	89414
		F6HT-18080-FC		...	...	○|○	85013	89414
ACTERRA								
03-10	All Models with Freightliner TufTrac Rear Air Suspension	16-15770-000		...	...	○|○	85956	...
		1615770000		...	...	○|○	85956	...
		481700125969		...	...	○|○	85956	...
03-10	Models with 15000 lb Rear Suspension	6803260000		...	...		83120	...
03-10	Models with FAS II (40,000 lb) Rear Air Suspension	16-13957-000		...	...	○|○	85724	89443
		16-15817-000		...	...	○|○	85724	89443
		680339		...	...	○|○	85724	89443
		680611		...	...	○|○	85724	89443
		1613957000		...	...	○|○	85724	89443
		1615817000		...	...	○|○	85724	89443
		XC45-18080-BA		...	...	○|○	85724	89443
		XC4518080BA		...	...	○|○	85724	89443
03-10	Models with Hendrickson Front Airtek	58913-003	○|○	85932	89453		...	...
		58913-003L	○|○	85932	89453		...	...
		58913003	○|○	85932	89453		...	...
		58913003L	○|○	85932	89453		...	...
		471700131331	○|○	85932	89453		...	...
ACTERRA 5500								
01-07	Models with 15000 lb Rear Suspension	6803260000		...	...		83120	...
01-07	Models with FAS II (40,000 lb) Rear Air Suspension	16-13957-000		...	...	○|○	85724	89443
		16-15817-000		...	...	○|○	85724	89443
		680339		...	...	○|○	85724	89443
		680611		...	...	○|○	85724	89443
		1613957000		...	...	○|○	85724	89443
		1615817000		...	...	○|○	85724	89443
		XC45-18080-BA		...	...	○|○	85724	89443
		XC4518080BA		...	...	○|○	85724	89443
01-07	Models with Hendrickson Front Airtek	58913-003	○|○	85932	89453		...	...
		58913-003L	○|○	85932	89453		...	...
		58913003	○|○	85932	89453		...	...
		58913003L	○|○	85932	89453		...	...
		471700131331	○|○	85932	89453		...	...
ACTERRA 6500								
01-07	Models with 15000 lb Rear Suspension	6803260000		...	...		83120	...
01-07	Models with FAS II (40,000 lb) Rear Air Suspension	16-13957-000		...	...	○|○	85724	89443
		16-15817-000		...	...	○|○	85724	89443
		680339		...	...	○|○	85724	89443
		680611		...	...	○|○	85724	89443
		1613957000		...	...	○|○	85724	89443
		1615817000		...	...	○|○	85724	89443
		XC45-18080-BA		...	...	○|○	85724	89443

Year Ano Année	Model Modelo Modle	OEM #		Front			Rear	
				Fleetline	GasSLX		Fleetline	GasSLX
STERLING TRUCK (CONT'D)								
ACTERRA 6500 (cont'd)								
01-07	Models with FAS II (40,000 lb) Rear Air Suspension	XC4518080BA		...	...		85724	89443
01-07	Models with Hendrickson Front Airtek	58913-003		85932	89453		...	...
		58913-003L		85932	89453		...	...
		58913003		85932	89453		...	...
		58913003L		85932	89453		...	...
		471700131331		85932	89453		...	...
ACTERRA 7500								
01-07	Models with 15000 lb Rear Suspension	6803260000		...	...		83120	...
01-07	Models with FAS II (40,000 lb) Rear Air Suspension	16-13957-000		...	...		85724	89443
		16-15817-000		...	...		85724	89443
		680339		...	...		85724	89443
		680611		...	...		85724	89443
		1613957000		...	...		85724	89443
		1615817000		...	...		85724	89443
		XC45-18080-BA		...	...		85724	89443
		XC4518080BA		...	...		85724	89443
01-07	Models with Hendrickson Front Airtek	58913-003		85932	89453		...	...
		58913-003L		85932	89453		...	...
		58913003		85932	89453		...	...
		58913003L		85932	89453		...	...
		471700131331		85932	89453		...	...
ACTERRA 8500								
01-03	Models with 15000 lb Rear Suspension	6803260000		...	...		83120	...
01-03	Models with FAS II (40,000 lb) Rear Air Suspension	16-13957-000		...	...		85724	89443
		16-15817-000		...	...		85724	89443
		680339		...	...		85724	89443
		680611		...	...		85724	89443
		1613957000		...	...		85724	89443
		1615817000		...	...		85724	89443
		XC45-18080-BA		...	...		85724	89443
		XC4518080BA		...	...		85724	89443
01-03	Models with Hendrickson Front Airtek	58913-003		85932	89453		...	...
		58913-003L		85932	89453		...	...
		58913003		85932	89453		...	...
		58913003L		85932	89453		...	...
		471700131331		85932	89453		...	...
AT9513								
99-01	Models with 8500 or 9000 lb Axle and 54" Taperleaf Spring	F6HT18045HB		85054	...		...	...
		F6HT18045HC		85054	...		...	...
		F6HT-18045-HB		85054	...		...	...
		F6HT-18045-HC		85054	...		...	...
99-01	Models with 10000 lb or 12000 lb Axle and 54" Taperleaf Spring	F6HT18045AC		85054	...		...	...
		F6HT-18045-AC		85054	...		...	...
AT9522								
99-00	Models with 8500 or 9000 lb Axle and 54" Taperleaf Spring	F6HT18045HB		85054	...		...	...
		F6HT18045HC		85054	...		...	...
		F6HT-18045-HB		85054	...		...	...
		F6HT-18045-HC		85054	...		...	...
99-00	Models with 10000 lb or 12000 lb Axle and 54" Taperleaf Spring	F6HT18045AC		85054	...		...	...
		F6HT-18045-AC		85054	...		...	...

STERLING TRUCK (CONT'D)

BULLET 45

Year Ano Année	Model Modelo Modle	OEM #		Front Fleetline	Front GasSLX		Rear Fleetline	Rear GasSLX
08-10	Models with O.E.M. Number	6811 1104AB	−|O	85649	...		...	...
		6811 1104AB001	−|O	85649	...		...	...
		6811 1104AB-001	−|O	85649	...		...	...
		6811 1105AC	−|O	85649	...		...	...
		6811 1105AC001	−|O	85649	...		...	...
		6811 1105AC-001	−|O	85649	...		...	...
		6811 1107AA		...	...	O|O	85650	...
		6811 1107AA001		...	...	O|O	85650	...
		6811 1107AA-001		...	...	O|O	85650	...
		05168284AC	−|O	85649	...		...	...
		05168295AB	−|O	85649	...		...	...
		05168296AA		...	...	O|O	85650	...

BULLET 55

Year Ano Année	Model Modelo Modle	OEM #		Front Fleetline	Front GasSLX		Rear Fleetline	Rear GasSLX
08-10	Models with O.E.M. Number	6811 1104AB	−|O	85649	...		...	...
		6811 1104AB001	−|O	85649	...		...	...
		6811 1104AB-001	−|O	85649	...		...	...
		6811 1105AC	−|O	85649	...		...	...
		6811 1105AC001	−|O	85649	...		...	...
		6811 1105AC-001	−|O	85649	...		...	...
		6811 1107AA		...	...	O|O	85650	...
		6811 1107AA001		...	...	O|O	85650	...
		6811 1107AA-001		...	...	O|O	85650	...
		05168284AC	−|O	85649	...		...	...
		05168295AB	−|O	85649	...		...	...
		05168296AA		...	...	O|O	85650	...

L8500

Year Ano Année	Model Modelo Modle	OEM #		Front Fleetline	Front GasSLX		Rear Fleetline	Rear GasSLX
99-10	All Models with 23000 lb Axle and 52" Taperleaf Softride Rear Suspension	F6HT18080CA		...	...	O|O	85314	89425
		F6HT-18080-CA		...	...	O|O	85314	89425
99-10	All with 13200 lb or 14600 lb Axle and 54" Taperleaf Spring	F6HT18045GC	O|O	85030	89440		...	...
		F6HT-18045-GC	O|O	85030	89440		...	...
99-10	Models with 12000 lb, 13200 lb or 14600 lb Axle and 60" Taperleaf Spring	F6HT18045EB	O|O	85055	89439		...	...
		F6HT18045EC	O|O	85055	89439		...	...
		F6HT-18045-EB	O|O	85055	89439		...	...
		F6HT-18045-EC	O|O	85055	89439		...	...
99-10	Models with 12000 or 13200 lb Axle and 54" Multileaf Spring	F6HT18045BC	O|O	85047	89435		...	...
		F6HT-18045-BC	O|O	85047	89435		...	...
99-10	Models with 14600 lb or 16000 lb Axle and 54"Multi-leaf Spring	F6HT18045CC	O|O	85055	89439		...	...
		F6HT-18045-CC	O|O	85055	89439		...	...
99-10	Models with FAS II (40,000 lb) Rear Air Suspension	16-13957-000		...	...	O|O	85724	89443
		16-15817-000		...	...	O|O	85724	89443
		680339		...	...	O|O	85724	89443
		680611		...	...	O|O	85724	89443
		1613957000		...	...	O|O	85724	89443
		1615817000		...	...	O|O	85724	89443
99-10	Models with Hendrickson HAS Rear Air Suspension	47902-28		...	...	O|O	85013	89414
		4790228		...	...	O|O	85013	89414
		F6HT18080FC		...	...	O|O	85013	89414
		F6HT-18080-FC		...	...	O|O	85013	89414

L8501

Year Ano Année	Model Modelo Modle	OEM #		Front Fleetline	Front GasSLX		Rear Fleetline	Rear GasSLX
1999	All Models with 23000 lb Axle and 52" Taperleaf Softride Rear Suspension	F6HT18080CA		...	...	O|O	85314	89425

Year Ano Année	Model Modelo Modle	OEM #		Front			Rear	
				Fleetline	GasSLX		Fleetline	GasSLX

STERLING TRUCK (CONT'D)

L8501 (cont'd)

1999	All Models with 23000 lb Axle and 52" Taperleaf Softride Rear Suspension	F6HT-18080-CA		...	...	O|O	85314	89425
1999	All with 13200 lb or 14600 lb Axle and 54" Taperleaf Spring	F6HT18045GC	O|O	85030	89440		...	...
		F6HT-18045-GC	O|O	85030	89440		...	...
1999	Models with 12000 lb, 13200 lb or 14600 lb Axle and 60" Taperleaf Spring	F6HT18045EB	O|O	85055	89439		...	...
		F6HT18045EC	O|O	85055	89439		...	...
		F6HT-18045-EB	O|O	85055	89439		...	...
		F6HT-18045-EC	O|O	85055	89439		...	...
1999	Models with 12000 or 13200 lb Axle and 54" Multileaf Spring	F6HT18045BC	O|O	85047	89435		...	...
		F6HT-18045-BC	O|O	85047	89435		...	...
1999	Models with 14600 lb or 16000 lb Axle and 54"Multi-leaf Spring	F6HT18045CC	O|O	85055	89439		...	...
		F6HT-18045-CC	O|O	85055	89439		...	...
1999	Models with FAS II (40,000 lb) Rear Air Suspension	16-13957-000		...	...	O|O	85724	89443
		16-15817-000		...	...	O|O	85724	89443
		680339		...	...	O|O	85724	89443
		680611		...	...	O|O	85724	89443
		1613957000		...	...	O|O	85724	89443
		1615817000		...	...	O|O	85724	89443
1999	Models with Hendrickson HAS Rear Air Suspension	47902-28		...	...	O|O	85013	89414
		4790228		...	...	O|O	85013	89414
		F6HT18080FC		...	...	O|O	85013	89414
		F6HT-18080-FC		...	...	O|O	85013	89414

L8511

99-00	All Models with 23000 lb Axle and 52" Taperleaf Softride Rear Suspension	F6HT18080CA		...	...	O|O	85314	89425
		F6HT-18080-CA		...	...	O|O	85314	89425
99-00	Models with 12000 lb, 13200 lb or 14600 lb Axle and 60" Taperleaf Spring	F6HT18045EB	O|O	85055	89439		...	...
		F6HT18045EC	O|O	85055	89439		...	...
		F6HT-18045-EB	O|O	85055	89439		...	...
		F6HT-18045-EC	O|O	85055	89439		...	...
99-00	Models with 12000 or 13200 lb Axle and 54" Multileaf Spring	F6HT18045BC	O|O	85047	89435		...	...
		F6HT-18045-BC	O|O	85047	89435		...	...
99-00	Models with 14600 lb or 16000 lb Axle and 54"Multi-leaf Spring	F6HT18045CC	O|O	85055	89439		...	...
		F6HT-18045-CC	O|O	85055	89439		...	...
99-00	Models with FAS II (40,000 lb) Rear Air Suspension	16-13957-000		...	...	O|O	85724	89443
		16-15817-000		...	...	O|O	85724	89443
		680339		...	...	O|O	85724	89443
		680611		...	...	O|O	85724	89443
		1613957000		...	...	O|O	85724	89443
		1615817000		...	...	O|O	85724	89443

L8513

99-01	All Models with 23000 lb Axle and 52" Taperleaf Softride Rear Suspension	F6HT18080CA		...	...	O|O	85314	89425
		F6HT-18080-CA		...	...	O|O	85314	89425
99-01	All with 13200 lb or 14600 lb Axle and 54" Taperleaf Spring	F6HT18045GC	O|O	85030	89440		...	...
		F6HT-18045-GC	O|O	85030	89440		...	...
99-01	Models with 12000 lb, 13200 lb or 14600 lb Axle and 60" Taperleaf Spring	F6HT18045EB	O|O	85055	89439		...	...
		F6HT18045EC	O|O	85055	89439		...	...
		F6HT-18045-EB	O|O	85055	89439		...	...
		F6HT-18045-EC	O|O	85055	89439		...	...
99-01	Models with 12000 or 13200 lb Axle and 54" Multileaf Spring	F6HT18045BC	O|O	85047	89435		...	...
		F6HT-18045-BC	O|O	85047	89435		...	...
99-01	Models with 14600 lb or 16000 lb Axle and 54"Multi-leaf Spring	F6HT18045CC	O|O	85055	89439		...	...
		F6HT-18045-CC	O|O	85055	89439		...	...
99-01	Models with FAS II (40,000 lb) Rear Air Suspension	16-13957-000		...	...	O|O	85724	89443

STERLING TRUCK (CONT'D)

L8513 (cont'd)

Year Ano Année	Model Modelo Modle	OEM #		Front Fleetline	Front GasSLX		Rear Fleetline	Rear GasSLX
99-01	Models with FAS II (40,000 lb) Rear Air Suspension	16-15817-000		...	...	○|○	85724	89443
		680339		...	...	○|○	85724	89443
		680611		...	...	○|○	85724	89443
		1613957000		...	...	○|○	85724	89443
		1615817000		...	...	○|○	85724	89443
99-01	Models with Hendrickson HAS Rear Air Suspension	47902-28		...	...	○|○	85013	89414
		4790228		...	...	○|○	85013	89414
		F6HT18080FC		...	...	○|○	85013	89414
		F6HT-18080-FC		...	...	○|○	85013	89414

L9500

99-10	All Models with 23000 lb Axle and 52" Taperleaf Softride Rear Suspension	F6HT18080CA		...	...	○|○	85314	89425
		F6HT-18080-CA		...	...	○|○	85314	89425
99-10	All with 13200 lb or 14600 lb Axle and 54" Taperleaf Spring	F6HT18045GC	○|○	85030	89440		...	...
		F6HT-18045-GC	○|○	85030	89440		...	...
99-10	Models with 12000 lb, 13200 lb or 14600 lb Axle and 60" Taperleaf Spring	F6HT18045EB	○|○	85055	89439		...	...
		F6HT18045EC	○|○	85055	89439		...	...
		F6HT-18045-EB	○|○	85055	89439		...	...
		F6HT-18045-EC	○|○	85055	89439		...	...
99-10	Models with 12000 or 13200 lb Axle and 54" Multileaf Spring	F6HT18045BC	○|○	85047	89435		...	...
		F6HT-18045-BC	○|○	85047	89435		...	...
99-10	Models with 14600 lb or 16000 lb Axle and 54"Multi-leaf Spring	F6HT18045CC	○|○	85055	89439		...	...
		F6HT-18045-CC	○|○	85055	89439		...	...
99-10	Models with FAS II (40,000 lb) Rear Air Suspension	16-13957-000		...	...	○|○	85724	89443
		16-15817-000		...	...	○|○	85724	89443
		680339		...	...	○|○	85724	89443
		680611		...	...	○|○	85724	89443
		1613957000		...	...	○|○	85724	89443
		1615817000		...	...	○|○	85724	89443
99-10	Models with Hendrickson 40LH Model Tandem Axle	57241-2		...	...		83109	...
		572412		...	...		83109	...
99-10	Models with Hendrickson HAS Rear Air Suspension	47902-28		...	...	○|○	85013	89414
		4790228		...	...	○|○	85013	89414
		F6HT18080FC		...	...	○|○	85013	89414
		F6HT-18080-FC		...	...	○|○	85013	89414

L9501

99-00	All Models with 23000 lb Axle and 52" Taperleaf Softride Rear Suspension	F6HT18080CA		...	...	○|○	85314	89425
		F6HT-18080-CA		...	...	○|○	85314	89425
99-00	All with 13200 lb or 14600 lb Axle and 54" Taperleaf Spring	F6HT18045GC	○|○	85030	89440		...	...
		F6HT-18045-GC	○|○	85030	89440		...	...
99-00	Models with 12000 lb, 13200 lb or 14600 lb Axle and 60" Taperleaf Spring	F6HT18045EB	○|○	85055	89439		...	...
		F6HT18045EC	○|○	85055	89439		...	...
		F6HT-18045-EB	○|○	85055	89439		...	...
		F6HT-18045-EC	○|○	85055	89439		...	...
99-00	Models with 12000 or 13200 lb Axle and 54" Multileaf Spring	F6HT18045BC	○|○	85047	89435		...	...
		F6HT-18045-BC	○|○	85047	89435		...	...
99-00	Models with 14600 lb or 16000 lb Axle and 54"Multi-leaf Spring	F6HT18045CC	○|○	85055	89439		...	...
		F6HT-18045-CC	○|○	85055	89439		...	...
99-00	Models with FAS II (40,000 lb) Rear Air Suspension	16-13957-000		...	...	○|○	85724	89443
		16-15817-000		...	...	○|○	85724	89443
		680339		...	...	○|○	85724	89443
		680611		...	...	○|○	85724	89443
		1613957000		...	...	○|○	85724	89443

Year Ano Année	Model Modelo Modle	OEM #		Front			Rear	
				Fleetline	GasSLX		Fleetline	GasSLX
STERLING TRUCK (CONT'D)								
L9501 (cont'd)								
99-00	Models with FAS II (40,000 lb) Rear Air Suspension	1615817000		...	...	O|O	85724	89443
99-00	Models with Hendrickson 40LH Model Tandem Axle	57241-2		...	...		83109	...
		572412		...	...		83109	...
99-00	Models with Hendrickson HAS Rear Air Suspension	47902-28		...	...	O|O	85013	89414
		4790228		...	...	O|O	85013	89414
		F6HT18080FC		...	...	O|O	85013	89414
		F6HT-18080-FC		...	...	O|O	85013	89414
L9511								
99-00	Models with 12000 lb, 13200 lb or 14600 lb Axle and 60" Taperleaf Spring	F6HT18045EB	O|O	85055	89439		...	...
		F6HT18045EC	O|O	85055	89439		...	...
		F6HT-18045-EB	O|O	85055	89439		...	...
		F6HT-18045-EC	O|O	85055	89439		...	...
99-00	Models with 12000 or 13200 lb Axle and 54" Multileaf Spring	F6HT18045BC	O|O	85047	89435		...	...
		F6HT-18045-BC	O|O	85047	89435		...	...
99-00	Models with 14600 lb or 16000 lb Axle and 54"Multi-leaf Spring	F6HT18045CC	O|O	85055	89439		...	...
		F6HT-18045-CC	O|O	85055	89439		...	...
99-01	All Models with 23000 lb Axle and 52" Taperleaf Softride Rear Suspension	F6HT18080CA		...	...	O|O	85314	89425
		F6HT-18080-CA		...	...	O|O	85314	89425
99-01	All with 13200 lb or 14600 lb Axle and 54" Taperleaf Spring	F6HT18045GC	O|O	85030	89440		...	...
		F6HT-18045-GC	O|O	85030	89440		...	...
99-01	Models with FAS II (40,000 lb) Rear Air Suspension	16-13957-000		...	...	O|O	85724	89443
		16-15817-000		...	...	O|O	85724	89443
		680339		...	...	O|O	85724	89443
		680611		...	...	O|O	85724	89443
		1613957000		...	...	O|O	85724	89443
		1615817000		...	...	O|O	85724	89443
99-01	Models with Hendrickson 40LH Model Tandem Axle	57241-2		...	...		83109	...
		572412		...	...		83109	...
99-01	Models with Hendrickson HAS Rear Air Suspension	47902-28		...	...	O|O	85013	89414
		4790228		...	...	O|O	85013	89414
		F6HT18080FC		...	...	O|O	85013	89414
		F6HT-18080-FC		...	...	O|O	85013	89414
L9513								
99-00	All Models with 23000 lb Axle and 52" Taperleaf Softride Rear Suspension	F6HT18080CA		...	...	O|O	85314	89425
		F6HT-18080-CA		...	...	O|O	85314	89425
99-00	All with 13200 lb or 14600 lb Axle and 54" Taperleaf Spring	F6HT18045GC	O|O	85030	89440		...	...
		F6HT-18045-GC	O|O	85030	89440		...	...
99-00	Models with 12000 lb, 13200 lb or 14600 lb Axle and 60" Taperleaf Spring	F6HT18045EB	O|O	85055	89439		...	...
		F6HT18045EC	O|O	85055	89439		...	...
		F6HT-18045-EB	O|O	85055	89439		...	...
		F6HT-18045-EC	O|O	85055	89439		...	...
99-00	Models with 12000 or 13200 lb Axle and 54" Multileaf Spring	F6HT18045BC	O|O	85047	89435		...	...
		F6HT-18045-BC	O|O	85047	89435		...	...
99-00	Models with 14600 lb or 16000 lb Axle and 54"Multi-leaf Spring	F6HT18045CC	O|O	85055	89439		...	...
		F6HT-18045-CC	O|O	85055	89439		...	...
99-00	Models with FAS II (40,000 lb) Rear Air Suspension	16-13957-000		...	...	O|O	85724	89443
		16-15817-000		...	...	O|O	85724	89443
		680339		...	...	O|O	85724	89443
		680611		...	...	O|O	85724	89443
		1613957000		...	...	O|O	85724	89443
		1615817000		...	...	O|O	85724	89443
99-00	Models with Hendrickson 40LH Model Tandem Axle	57241-2		...	...		83109	...

Year Ano Année	Model Modelo Modle	OEM #		Front			Rear	
				Fleetline	GasSLX		Fleetline	GasSLX
STERLING TRUCK (CONT'D)								
L9513 (cont'd)								
99-00	Models with Hendrickson 40LH Model Tandem Axle	572412		...	...		83109	...
99-00	Models with Hendrickson HAS Rear Air Suspension	47902-28		...	...	○|○	85013	89414
		4790228		...	...	○|○	85013	89414
		F6HT18080FC		...	...	○|○	85013	89414
		F6HT-18080-FC		...	...	○|○	85013	89414
L9522								
1999	All Models with 23000 lb Axle and 52" Taperleaf Softride Rear Suspension	F6HT18080CA		...	...	○|○	85314	89425
		F6HT-18080-CA		...	...	○|○	85314	89425
1999	All with 13200 lb or 14600 lb Axle and 54" Taperleaf Spring	F6HT18045GC	○|○	85030	89440		...	...
		F6HT-18045-GC	○|○	85030	89440		...	...
1999	Models with 12000 lb, 13200 lb or 14600 lb Axle and 60" Taperleaf Spring	F6HT18045EB	○|○	85055	89439		...	...
		F6HT18045EC	○|○	85055	89439		...	...
		F6HT-18045-EB	○|○	85055	89439		...	...
		F6HT-18045-EC	○|○	85055	89439		...	...
1999	Models with 12000 or 13200 lb Axle and 54" Multileaf Spring	F6HT18045BC	○|○	85047	89435		...	...
		F6HT-18045-BC	○|○	85047	89435		...	...
1999	Models with 14600 lb or 16000 lb Axle and 54"Multi-leaf Spring	F6HT18045CC	○|○	85055	89439		...	...
		F6HT-18045-CC	○|○	85055	89439		...	...
1999	Models with FAS II (40,000 lb) Rear Air Suspension	16-13957-000		...	...	○|○	85724	89443
		16-15817-000		...	...	○|○	85724	89443
		680339		...	...	○|○	85724	89443
		680611		...	...	○|○	85724	89443
		1613957000		...	...	○|○	85724	89443
		1615817000		...	...	○|○	85724	89443
1999	Models with Hendrickson 40LH Model Tandem Axle	57241-2		...	...		83109	...
		572412		...	...		83109	...
1999	Models with Hendrickson HAS Rear Air Suspension	47902-28		...	...	○|○	85013	89414
		4790228		...	...	○|○	85013	89414
		F6HT18080FC		...	...	○|○	85013	89414
		F6HT-18080-FC		...	...	○|○	85013	89414
LT9500								
99-08	Models with O.E.M. Number	F6HZ5K407AB	○|○	83034				
		F6HZ-5K407-AB	○|○	83034				
ACTERRA								
01-09	Models with 6000 to 9000 lb Front axle	10-12388-000	○|○	85920	89503		...	...
		1012388000	○|○	85920	89503		...	...
01-09	Models with 10000 to12000 lb. Taper-leaf Spring Suspension	10-12390-000	○|○	85920	89503		...	...
		1012390000	○|○	85920	89503		...	...
	Models with 11000 to 12000 lb Front axle	6803230300	○|○	85006	...		...	...
A - LINE 9500 SERIES (SILVERSTAR)								
98-21	A9513, A9522, AT9513, AT9522 (113" & 122" BBC) Models with 8500, 9000 or 10000 lb Axle and 54" Multileaf Spring	F6HT18045KA	○|○	89402	...		...	...
		F6HT-18045-KA	○|○	89402	...		...	...
CARGO LINE								
1998	SC-7000 or SC-8000 Models with 12000 or 13000 lb. Axles	F6HT18045LA	○|○	85376	...		...	...
		F6HT-18045-LA	○|○	85376	...		...	...
1998	SC-7000 or SC-8000 Models with 16000 lb. Multileaf Spring	F6HT18045AA	○|○	85054	...		...	...
		F6HT-18045-AA	○|○	85054	...		...	...
L - LINE 7500 SERIES - SHORT HAUL TRACTOR								
	Models with 10000 lb Front Axle	F6HT18045KA	○|○	89402	...		...	...

Year Ano Année	Model Modelo Modle	OEM #		Front			Rear	
				Fleetline	GasSLX		Fleetline	GasSLX

STERLING TRUCK (CONT'D)

L - LINE 7500 SERIES - SHORT HAUL TRACTOR (cont'd)

	Models with 10000 lb Front Axle	F6HT-18045-KA	O|O	**89402**	...		...	...

L - LINE 8500 SERIES - CONVENTIONAL CAB

1998	LT-8000 Models with 12000 or 13000 lb Axles	F6HT18045LA	O|O	**85376**	...		...	...
		F6HT-18045-LA	O|O	**85376**	...		...	...
1998	LT-8000 Models with 16000 lb. Multileaf Spring	F6HT18045AA	O|O	**85054**	...		...	...
		F6HT-18045-AA	O|O	**85054**	...		...	...
1998	LT-8501 (101" BBC) Models with 8500 or 9000 lb Axle and 54" Multileaf Spring	F6HT18045JB	O|O	**89402**	...		...	...
		F6HT18045JC	O|O	**89402**	...		...	...
		F6HT-18045-JB	O|O	**89402**	...		...	...
		F6HT-18045-JC	O|O	**89402**	...		...	...
	LT-8501 (101" BBC) Models with 8500 or 9000 lb Axle and 54" Taperleaf Spring	F6HT18045HB	O|O	**85054**	...		...	...
		F6HT18045HC	O|O	**85054**	...		...	...
		F6HT-18045-HB	O|O	**85054**	...		...	...
		F6HT-18045-HC	O|O	**85054**	...		...	...

L - LINE 9500 SERIES - CONVENTIONAL CAB

98-09	LT-9501, LT-9511, LT-9513 or LT-9513 (113" & 122" BBC) Models with 8500 or 9000 lb Axle and 54" Taperleaf Spring	F6HT18045HB	O|O	**85054**	...		...	...
		F6HT18045HC	O|O	**85054**	...		...	...
		F6HT-18045-HB	O|O	**85054**	...		...	...
		F6HT-18045-HC	O|O	**85054**	...		...	...
98-21	LT-9501, LT-9511, LT-9513 or LT-9513 (113" & 122" BBC) Models with 8500 or 9000 lb Axle and 54" Multileaf Spring	F6HT18045JB	O|O	**89402**	...		...	...
		F6HT18045JC	O|O	**89402**	...		...	...
		F6HT-18045-JB	O|O	**89402**	...		...	...
		F6HT-18045-JC	O|O	**89402**	...		...	...
	8500 & 9500 Models with 113" & 122" BBC Conventional Tractors with Link Cabmate Models FH1322 & FH1322-A	1202-1043	O|O	**83025**				
		12021043	O|O	**83025**				
	L8501 & L9501 Models with 101" BBC Conventional Tractors with Link Cabmate Model FH101	1202-1043	O|O	**83025**				
		12021043	O|O	**83025**				
	Models with 10,500 or 13,500 lb Vari-Rate Rear Spring Suspension	6E7Z18125A		...	...	O|O	**83364**	...
		6E7Z-18125-A		...	...	O|O	**83364**	...
	Models with Neway Rear Suspension	90045099		...	...	O|O	**85906**	**89407**
	Models with O.E.M. Number	4C4Z18124N	O|O	**85957**	...		...	...
		4C4Z18125DA		...	...	O|O	**85926**	...
		4C4Z-18124-N	O|O	**85957**	...		...	...
		4C4Z-18125-DA		...	...	O|O	**85926**	...
		16-15770-000		...	...	O|O	**85956**	...
		18-45067-000	O|O	**83034**				
		1615770000		...	...	O|O	**85956**	...
		1845067000	O|O	**83034**				
		AT560	O|O	**G63809**	...		...	...
		AT-560	O|O	**G63809**	...		...	...
		AX267A	O|O	**83309**	...		...	...
		AX310		...	...	O|O	**83215**	...
		AX-267A	O|O	**83309**	...		...	...
		AX-310		...	...	O|O	**83215**	...
		C4HZ18124E	O|O	**83309**	...		...	...
		C4HZ-18124-E	O|O	**83309**	...		...	...
		C4TZ18124AB	O|O	**83308**	...		...	...
		C4TZ-18124-AB	O|O	**83308**	...		...	...

STERLING TRUCK (CONT'D)

Year Ano Année	Model Modelo Modle	OEM #		Front			Rear	
				Fleetline	GasSLX		Fleetline	GasSLX
	Models with O.E.M. Number	D8HZ18124A	O|O	85301	...		...	...
		D8HZ-18124-A	O|O	85301	...		...	...
		E6HZ18124A	O|O	85301	...		...	...
		E6HZ18124D	O|O	85301	...		...	...
		E6HZ18125D		...	...	O|O	83215	...
		E6HZ-18124-A	O|O	85301	...		...	...
		E6HZ-18124-D	O|O	85301	...		...	...
		E6HZ-18125-D		...	...	O|O	83215	...
		E7HZ18124A	O|O	85301	...		...	...
		E7HZ-18124-A	O|O	85301	...		...	...
		E7XZ18124A	–|O	G63386	...		...	...
		E7XZ18125B		...	...	–|O	G63387	...
		E7XZ-18124-A	–|O	G63386	...		...	...
		E7XZ-18125-B		...	...	–|O	G63387	...
		E9HZ18124A	O|O	83309	...		...	...
		E9HZ-18124-A	O|O	83309	...		...	...
		F0HZ18124B	O|O	85006	...		...	...
		F0HZ-18124-B	O|O	85006	...		...	...
		F1HZ18124A	O|O	83309	...		...	...
		F1HZ18124B	O|O	83308	...		...	...
		F1HZ18124D	O|O	85006	...		...	...
		F1HZ18124E	O|O	85006	...		...	...
		F1HZ18124H	O|O	85040	...		...	...
		F1HZ18124J	O|O	83308	...		...	...
		F1HZ18124K	O|O	89402	...		...	...
		F1HZ-18124-A	O|O	83309	...		...	...
		F1HZ-18124-B	O|O	83308	...		...	...
		F1HZ-18124-D	O|O	85006	...		...	...
		F1HZ-18124-E	O|O	85006	...		...	...
		F1HZ-18124-H	O|O	85040	...		...	...
		F1HZ-18124-J	O|O	83308	...		...	...
		F1HZ-18124-K	O|O	89402	...		...	...
		F2HZ18124A	O|O	85376	...		...	...
		F2HZ18124B	O|O	85301	...		...	...
		F2HZ-18124-A	O|O	85376	...		...	...
		F2HZ-18124-B	O|O	85301	...		...	...
		F4HT18080AB		...	...	O|O	85314	89425
		F4HT18080BA		...	...	O|O	85001	89410
		F4HT-18080-AB		...	...	O|O	85314	89425
		F4HT-18080-BA		...	...	O|O	85001	89410
		F5HZ18124A	O|O	83314	...		...	...
		F5HZ18124B	O|O	83107	...		...	...
		F5HZ18124C	O|O	85063	...		...	...
		F5HZ18124D	O|O	83125	...		...	...
		F5HZ18125A		...	...	O|O	85314	89425
		F5HZ18125B		...	...	O|O	85001	89410
		F5HZ-18124-A	O|O	83314	...		...	...
		F5HZ-18124-B	O|O	83107	...		...	...
		F5HZ-18124-C	O|O	85063	...		...	...
		F5HZ-18124-D	O|O	83125	...		...	...
		F5HZ-18125-A		...	...	O|O	85314	89425
		F5HZ-18125-B		...	...	O|O	85001	89410
		F6HT18045GB	O|O	85030	89440		...	...
		F6HT18080B		...	...		83109	...
		F6HT18080DA		...	...		83109	...

APPLICATION GUIDE - TRUCKS, TRAILERS AND BUSES

Year Ano Année	Model Modelo Modle	OEM #		Front			Rear	
				Fleetline	GasSLX		Fleetline	GasSLX
STERLING TRUCK (CONT'D)								
	Models with O.E.M. Number	F6HT18080EA		...	...	O|O	85906	89407
		F6HT18124JC	O|O	89402	...		...	...
		F6HT18124KA	O|O	89402	...		...	...
		F6HT-18045-GB	O|O	85030	89440		...	...
		F6HT-18080-B		...	...		83109	...
		F6HT-18080-DA		...	...		83109	...
		F6HT-18080-EA		...	...	O|O	85906	89407
		F6HT-18124-JC	O|O	89402	...		...	...
		F6HT-18124-KA	O|O	89402	...		...	...
		F6HZ18124A	O|O	85054	...		...	...
		F6HZ18124B	O|O	83308	...		...	...
		F6HZ18124C	O|O	85055	89439		...	...
		F6HZ18124D	O|O	85055	89439		...	...
		F6HZ18124E	O|O	85055	89439		...	...
		F6HZ18124F	O|O	85055	89439		...	...
		F6HZ18124G	O|O	85054	...		...	...
		F6HZ18124H	O|O	85054	...		...	...
		F6HZ18124J	O|O	89402	...		...	...
		F6HZ18125B		...	...		83109	...
		F6HZ18125D		...	...	O|O	85013	89414
		F6HZ-18124-A	O|O	85054	...		...	...
		F6HZ-18124-B	O|O	83308	...		...	...
		F6HZ-18124-C	O|O	85055	89439		...	...
		F6HZ-18124-D	O|O	85055	89439		...	...
		F6HZ-18124-E	O|O	85055	89439		...	...
		F6HZ-18124-F	O|O	85055	89439		...	...
		F6HZ-18124-G	O|O	85054	...		...	...
		F6HZ-18124-H	O|O	85054	...		...	...
		F6HZ-18124-J	O|O	89402	...		...	...
		F6HZ-18125-B		...	...		83109	...
		F6HZ-18125-D		...	...	O|O	85013	89414
		F81A18045AGB	O|O	G63809	...		...	...
		F81A-18045-AGB	O|O	G63809	...		...	...
		XC45-18045-AA	O|O	83216	...		...	...
		XC4518045AA	O|O	83216	...		...	...
STOUGHTON TRAILERS INC.								
	Trailers with Hendrickson HT190T, HT190U, & HS190T Models Air Suspension	HTA20001		...	...	O|O	83389	89436
	Trailers with Hendrickson HT230T Models Air Suspension	HTA20002		...	...	O|O	85000	89436
	Trailers with Neway AR-90-1-12, -14, -17 Models Air Suspension	NW90044162		...	...	O|O	83128	89436
	Trailers with Neway AR-90-1-15, -16 Models Air Suspension	NW90044448		...	...	O|O	85051	...
	Trailers with Neway RL-196-14, -15, Models Air Suspension	NW90044978		...	...	O|O	85059	...
	Trailers with Neway RL-196-16, -17, Models Air Suspension	NW90044979		...	...	O|O	83113	...
	Trailers with Reyco 86AR/RS1015 Air Ride Suspension	RT18165-01		...	...	O|O	85006	...
		RT1816501		...	...	O|O	85006	...
	Trailers with Reyco 86AR/RS1035 Anti-Dock Walk Air Suspension	RT18165-01		...	...	O|O	85006	...
		RT1816501		...	...	O|O	85006	...
SUSPENSIONS INC.								
	LP11 Steerable Lift Axle	200188	O|O	646155				
SUSPENSYS								
	FS230 Trailer Suspension (Light Duty)	218004872		...	...	O|O	85737	...
TEREX CORPORATION								
	Rear Discharge Mixers with Self - Steering Axle Shock	12111	O|O	646155				

APPLICATION GUIDE - TRUCKS, TRAILERS AND BUSES

Year Ano Année	Model Modelo Modle	OEM #		Front			Rear	
				Fleetline	GasSLX		Fleetline	GasSLX
THE BINKLEY COMPANY								
1997	Trailers with Binkley AirLite Suspension	6898		...	...	○|○	83125	...
		16965		...	...	○|○	85006	...
THOMAS SCHOOL BUS								
07-12	Type C Conventional Buses (65 capacity) with 12000 lb Taperleaf Front Suspension	10-13634-000	○|○	85918	89449		...	...
		1013634000	○|○	85918	89449		...	...
09-12	Type C School bus chassis with O.E.M. Number	16-18713-000		...	...		85122	...
		1618713000		...	...		85122	...
		471700003070		...	...		85122	...
05-22	Models with B2 Bus Chassis with FAS II Rear Air Suspension	16-15817-000		...	...	○|○	85724	89443
		16-18708-000		...	...	○|○	85724	89443
05-22	Models with Freightliner B2 Bus Chassis & 15000 lb Rear Suspension	6803260000		...	...		83120	...
05-22	Models with Freightliner CC B2 Bus Chassis	10-13211-000	○|○	85918	89449		...	...
		10-13634-000	○|○	85918	89449		...	...
		1013211000	○|○	85918	89449		...	...
		1013634000	○|○	85918	89449		...	...
2003	Type C Conventional School buses (65 capacity) with O.E.M. Number	680-323-0300	○|○	85006	...		...	...
		6803230300	○|○	85006	...		...	...
		GBL665538	○|○	85006	...		...	...
2009	SAF-T-Liner School Bus with SAF Holland AD-246 Suspension	90045504	○|○	85030	89440		...	...
2009	SAF-T-Liner School Bus with SAF Holland AD-369 Suspension	90045504	○|○	85030	89440		...	...
	Additional O.E.M. Interchanges	63-0001		...	...	○|○	85713	...
		6130-0114		...	...	○|○	89437	...
		87002	○|○	85736				
		630001		...	...	○|○	85713	...
		680088		...	...	○|○	85713	...
		680102	○|○	85712				
		728802	○|○	85736				
		6130029	○|○	85712				
		61300114		...	...	○|○	89437	...
		61310104		...	...	○|○	85713	...
		A4890		...	...	○|○	85712	...
		A-4890		...	...	○|○	85712	...
	Buses with Neway Tandem Air Suspension	61310232		...	...	○|○	85000	89436
	Buses with O.E.M. Number	16-19138-000	○|○	85058	89431		...	...
		1619138000	○|○	85058	89431		...	...
	Model MVP	61310101	○|○	85736	...		...	...
	Models with Hendrickson Comfort Air Rear Air Suspension	60670-006		...	...	○|○	83147	...
		60670-006L		...	...	○|○	83147	...
		60670006		...	...	○|○	83147	...
		60670006L		...	...	○|○	83147	...
	Models with O.E.M. Number	680-326-0000		...	...		83120	...
		6130-0114	○|○	89437				
		128745	−|−	83102	...		...	...
		651442	−|−	83102	...		...	...
		659287	−|−	83102	...		...	...
		61300112	−|−	83613	...		...	...
		61300114	○|○	89437				
		61300224	○|○	85918	89449		...	...
		61300240	○|○	85918	89449		...	...
		61310102		...	...	○|○	85308	89422
		61310103		...	...	○|○	85308	89422
		6803260000		...	...		83120	...
		GBL654725		...	...		83120	...
	ROC Front, SAF-T-Liner	61300285	−|−	83102	...		...	...

APPLICATION GUIDE - TRUCKS, TRAILERS AND BUSES

Year Ano Année	Model Modelo Modle	OEM #		Front			Rear	
				Fleetline	GasSLX		Fleetline	GasSLX
THOMAS SCHOOL BUS (CONT'D)								
	ROC Front, SAF-T-Liner	GBL651442	−|−	**83102**	...		...	...
	SAF-T-Liner HDX Models with Hendrickson Comfort Air Rear Air Suspension	60998-001		...	...	o|o	**85006**	...
		60998-003		...	...	o|o	**85006**	...
		60998001		...	...	o|o	**85006**	...
		60998003		...	...	o|o	**85006**	...
		471700131545		...	...	o|o	**85006**	...
	SAF-T-Liner School Bus MVP-ER & MVP-EF	70445	o|o	**85014**	...		...	...
		61300219	o|o	**85014**	...		...	...
		61300222	o|o	**85014**	...		...	...
		61300223	o|o	**85014**	...		...	...
	School Bus	300-0614966		...	...	o|o	**85307**	...
		00614966		...	...	o|o	**85307**	...
		614974	o|o	**85304**	...		...	...
		680010	o|o	**85304**	...		...	...
		680054		...	...	o|o	**85307**	...
		3000614966		...	...	o|o	**85307**	...
	Type C Conventional Buses (65 capacity) with FAS II Rear Air Suspension To 2017	16-15817-000		...	...	o|o	**85724**	**89443**
		16-18708-000		...	...	o|o	**85724**	**89443**
		61310434		...	...	o|o	**85724**	**89443**
		61310478		...	...	o|o	**85724**	**89443**
		1615817000		...	...	o|o	**85724**	**89443**
		1618708000		...	...	o|o	**85724**	**89443**
TYPE A SCHOOL BUS								
00-20	Minotour Type A School bus with Ford E450 Chassis	8C2Z-18125-D		...	...	−|o	**G63623**	...
		8C24-18080-DB		...	...	−|o	**G63623**	...
		ASH-1136		...	...	−|o	**G63623**	...
		AT-164G		...	...	−|o	**G63623**	...
92-20	Minotour Type A School bus with Ford E350 Chassis	8C2Z-18125-D		...	...	−|o	**G63623**	...
		8C24-18080-DB		...	...	−|o	**G63623**	...
		ASH-1136		...	...	−|o	**G63623**	...
		AT-164G		...	...	−|o	**G63623**	...
00-22	Minotour Type A School bus with Ford E450 Chassis	8C2Z-18124-D	−|o	**G63622**	...		...	...
		8C24-18045-DA	−|o	**G63622**	...		...	...
		ASH-1154	−|o	**G63622**	...		...	...
		AT-163G	−|o	**G63622**	...		...	...
92-22	Minotour Type A School bus with Ford E350 Chassis	8C2Z-18124-D	−|o	**G63622**	...		...	...
		8C24-18045-DA	−|o	**G63622**	...		...	...
		ASH-1154	−|o	**G63622**	...		...	...
		AT-163G	−|o	**G63622**	...		...	...
THOR MOTOR COACH								
CLASS A MOTORHOMES								
02-05	Escaper Series MotorHomes with Freightliner XC Chassis	16-16736-000		...	...	o|o	**85029**	...
		16-16737-000	o|o	**83160**	...		...	...
		16-16873-000		...	...	o|o	**85029**	...
		16-16874-000	o|o	**83160**	...		...	...
		16-18103-000	−|−	**85900**	...		...	...
		1616736000		...	...	o|o	**85029**	...
		1616737000	o|o	**83160**	...		...	...
		1616873000		...	...	o|o	**85029**	...
		1616874000	o|o	**83160**	...		...	...
		1618103000	−|−	**85900**	...		...	...
		141700131809		...	...	o|o	**85029**	...

THOR MOTOR COACH (CONT'D)

CLASS A MOTORHOMES (cont'd)

Year Ano Année	Model Modelo Modle	OEM #	Front			Rear	
			Fleetline	GasSLX		Fleetline	GasSLX
02-05	Escaper Series MotorHomes with Freightliner XC Chassis	141700131810	83160	...		...	...
		481700000493	85900	...		...	...
02-05	UltraSport Series MotorHomes with Freightliner XC Chassis	16-16736-000	...	...		85029	...
		16-16737-000	83160	...		...	...
		16-16873-000	...	...		85029	...
		16-16874-000	83160	...		...	...
		16-18103-000	85900	...		...	...
		1616736000	...	...		85029	...
		1616737000	83160	...		...	...
		1616873000	...	...		85029	...
		1616874000	83160	...		...	...
		1618103000	85900	...		...	...
		141700131809	...	...		85029	...
		141700131810	83160	...		...	...
		481700000493	85900	...		...	...
04-20	Hurricane Series MotorHomes with Ford F53 Chassis with 16,000 lb GVW to 22,000 lb GVW	ASH25824	...	...		83122	89406
		ASH-1229	83209	89414		...	...
		ASH-25822	83209	89414		...	...
		ASH-25823	83209	89414		...	...
		ASH-25824	...	...		83122	89406
05-20	Challenger Series MotorHomes with Ford F53 Chassis with 16,000 lb GVW to 22,000 lb GVW	ASH25824	...	...		83122	89406
		ASH-1229	83209	89414		...	...
		ASH-25822	83209	89414		...	...
		ASH-25823	83209	89414		...	...
		ASH-25824	...	...		83122	89406
06-20	WindSport Series MotorHomes with Ford F53 Chassis with 16,000 lb GVW to 22,000 lb GVW	ASH25824	...	...		83122	89406
		ASH-1229	83209	89414		...	...
		ASH-25822	83209	89414		...	...
		ASH-25823	83209	89414		...	...
		ASH-25824	...	...		83122	89406
07-20	Outlaw Series MotorHomes with Ford F53 Chassis with 16,000 lb GVW to 22,000 lb GVW	ASH25824	...	...		83122	89406
		ASH-1229	83209	89414		...	...
		ASH-25822	83209	89414		...	...
		ASH-25823	83209	89414		...	...
		ASH-25824	...	...		83122	89406
12-20	ACE Series MotorHomes with Ford F53 Chassis with 16,000 lb GVW to 22,000 lb GVW	ASH25824	...	...		83122	89406
		ASH-1229	83209	89414		...	...
		ASH-25822	83209	89414		...	...
		ASH-25823	83209	89414		...	...
		ASH-25824	...	...		83122	89406
14-20	Axis Series MotorHomes with Ford E450 Chassis	ASH-1136	...	...		G63623	...
		ASH-1154	G63622	...		...	...
14-20	Miramar Series MotorHomes with Ford F53 Chassis with 16,000 lb GVW to 22,000 lb GVW	ASH25824	...	...		83122	89406
		ASH-1229	83209	89414		...	...
		ASH-25822	83209	89414		...	...
		ASH-25823	83209	89414		...	...
		ASH-25824	...	...		83122	89406
14-20	Vegas Series MotorHomes with Ford E450 Chassis	ASH-1136	...	...		G63623	...
		ASH-1154	G63622	...		...	...
2006	Astoria Series MotorHomes with Freightliner XC Chassis	16-16736-000	...	...		85029	...

Year Ano Année	Model Modelo Modle	OEM #		Front			Rear	
				Fleetline	GasSLX		Fleetline	GasSLX
THOR MOTOR COACH (CONT'D)								
CLASS A MOTORHOMES (cont'd)								
2006	Astoria Series MotorHomes with Freightliner XC Chassis	16-16737-000	O|O	**83160**	...		...	...
		16-16873-000		...	...	O|O	**85029**	...
		16-16874-000	O|O	**83160**	...		...	...
		16-18103-000	–|–	**85900**	...		...	...
		1616736000		...	...	O|O	**85029**	...
		1616737000	O|O	**83160**	...		...	...
		1616873000		...	...	O|O	**85029**	...
		1616874000	O|O	**83160**	...		...	...
		1618103000	–|–	**85900**	...		...	...
		141700131809		...	...	O|O	**85029**	...
		141700131810	O|O	**83160**	...		...	...
		481700000493	–|–	**85900**	...		...	...
2006	Tuscany Series MotorHomes with Freightliner XC Chassis	16-16736-000		...	...	O|O	**85029**	...
		16-16737-000	O|O	**83160**	...		...	...
		16-16873-000		...	...	O|O	**85029**	...
		16-16874-000	O|O	**83160**	...		...	...
		16-18103-000	–|–	**85900**	...		...	...
		1616736000		...	...	O|O	**85029**	...
		1616737000	O|O	**83160**	...		...	...
		1616873000		...	...	O|O	**85029**	...
		1616874000	O|O	**83160**	...		...	...
		1618103000	–|–	**85900**	...		...	...
		141700131809		...	...	O|O	**85029**	...
		141700131810	O|O	**83160**	...		...	...
		481700000493	–|–	**85900**	...		...	...
CLASS C MOTORHOMES								
08-13	Chateau Citation Series MotorHomes with Ford E350 & E450 Chassis	ASH-1136		...	...	–|O	**G63623**	...
		ASH-1154	–|O	**G63622**	...		...	...
01-14	Citation Series MotorHomes with Ford E350 & E450 Chassis	ASH-1136		...	...	–|O	**G63623**	...
		ASH-1154	–|O	**G63622**	...		...	...
12-14	Majestic Series MotorHomes with Ford E350 & E450 Chassis	ASH-1136		...	...	–|O	**G63623**	...
		ASH-1154	–|O	**G63622**	...		...	...
01-20	Four Winds Series MotorHomes with Ford E350 & E450 Chassis	ASH-1136		...	...	–|O	**G63623**	...
10-20	Freedom Elite Series MotorHomes with Ford E350 & E450 Chassis	ASH-1136		...	...	–|O	**G63623**	...
		ASH-1154	–|O	**G63622**	...		...	...
16-20	Outlaw Series MotorHomes with Ford E350 & E450 Chassis	ASH-1136		...	...	–|O	**G63623**	...
16-20	Quantum Series MotorHomes with Ford E350 & E450 Chassis	ASH-1136		...	...	–|O	**G63623**	...
99-20	Chateau Series MotorHomes with Ford E350 & E450 Chassis	ASH-1136		...	...	–|O	**G63623**	...
01-22	Four Winds Series MotorHomes with Ford E350 & E450 Chassis	ASH-1154	–|O	**G63622**	...		...	...
16-22	Outlaw Series MotorHomes with Ford E350 & E450 Chassis	ASH-1154	–|O	**G63622**	...		...	...
16-22	Quantum Series MotorHomes with Ford E350 & E450 Chassis	ASH-1154	–|O	**G63622**	...		...	...
99-22	Chateau Series MotorHomes with Ford E350 & E450 Chassis	ASH-1154	–|O	**G63622**	...		...	...
TIFFIN MOTORHOMES INC								
	Models with Hendrickson Softek Suspension	58913-009	O|O	**85959**	...		...	...
		58913-009L	O|O	**85959**	...		...	...
		58913009	O|O	**85959**	...		...	...
		58913009L	O|O	**85959**	...		...	...
TIMBREN INDUSTRIES								
	Additional O.E.M. Interchanges	665804		...	...	O|O	**85939**	...
TRAILMOBILE CANADA CORP.								
	Models with O.E.M. Number	43-4-235		...	...	O|O	**85051**	...

Year Ano Année	Model Modelo Modle	OEM #		Front			Rear	
				Fleetline	GasSLX		Fleetline	GasSLX
TRAILMOBILE CANADA CORP. (CONT'D)								
	Models with O.E.M. Number	43-4-236		...	...	○|○	85029	...
		43-4-237		...	...	○|○	85000	89436
		43-4-239		...	...	○|○	83207	89407
		43-4-241		...	...	○|○	85006	...
		43-4-277		...	...	○|○	85000	89436
		43-4-278		...	...	○|○	85059	...
		43-4-279		...	...	○|○	83204	...
		43-6-028		...	...	○|○	85000	89436
		43-6-137		...	...	○|○	85006	...
		43-6-158		...	...	○|○	85013	89414
		43-6-164		...	...	○|○	83207	89407
		43-8-031		...	...	○|○	85029	...
		434235		...	...	○|○	85051	...
		434236		...	...	○|○	85029	...
		434237		...	...	○|○	85000	89436
		434239		...	...	○|○	83207	89407
		434241		...	...	○|○	85006	...
		434277		...	...	○|○	85000	89436
		434278		...	...	○|○	85059	...
		434279		...	...	○|○	83204	...
		436028		...	...	○|○	85000	89436
		436137		...	...	○|○	85006	...
		436158		...	...	○|○	85013	89414
		436164		...	...	○|○	83207	89407
		438031		...	...	○|○	85029	...
	Trailers with Granning Air Susp. T-350A	43-8-022		...	...	○|○	83225	...
		438022		...	...	○|○	83225	...
	Trailers with Hendrickson Air Susp. HT230T (23,000 lb Capacity)	43-6-118		...	...	○|○	85000	89436
		436118		...	...	○|○	85000	89436
	Trailers with Hendrickson Air Susp. HT250U, HT250U-Y	A2212		...	...	○|○	85029	...
		A-2212		...	...	○|○	85029	...
	Trailers with Hendrickson Air Susp. T23-RL-17	43-8-011		...	...	○|○	83207	89407
		438011		...	...	○|○	83207	89407
	Trailers with Hendrickson Air Susp. T23-US-6 (Non-Liftable)	43-8-015		...	...	○|○	85006	...
		438015		...	...	○|○	85006	...
	Trailers with Hendrickson Air Susp. T23-US-9 (Liftable & Non-Liftable)	43-8-014		...	...	○|○	85013	89414
		438014		...	...	○|○	85013	89414
	Trailers with Hendrickson Air Susp. T30-US-9, -12, -14, -17	43-8-013		...	...	○|○	85000	89436
		438013		...	...	○|○	85000	89436
	Trailers with Neway Air Susp. AR90-1-14, AR90-1-17	90044089		...	...	○|○	83124	89407
	Trailers with Neway Air Susp. AR90-14, -17,	90044089		...	...	○|○	83124	89407
	Trailers with Neway Air Susp. AR92-14	90044992		...	...	○|○	85000	89436
	Trailers with Neway Air Susp. AR92-17	90044642		...	...	○|○	83127	...
	Trailers with Neway Air Susp. AR93-14	90045054		...	...	○|○	85051	...
	Trailers with Neway Air Susp. AR93-17	90044089		...	...	○|○	83124	89407
	Trailers with Neway Air Susp. AR95-9-HD, -12-HD,-14-HD, 17-HD	90044625		...	...	○|○	83125	...
	Trailers with Neway Air Susp. RL196-14, -15	90044978		...	...	○|○	85059	...
	Trailers with Neway Air Susp. RL196-16, -17	90044979		...	...	○|○	83113	...
	Trailers with Reyco Air Susp. Model # 21AR (25,000 LB Capacity)	43-8-002		...	...	○|○	83209	89414
		438002		...	...	○|○	83209	89414
	Trailers with Reyco Air Susp. Model # 74AR (30,000 LB Capacity)	43-8-002		...	...	○|○	83209	89414
		438002		...	...	○|○	83209	89414
	Trailers with Reyco Air Susp. Model # 86AR	43-8-015		...	...	○|○	85006	...
		438015		...	...	○|○	85006	...
TRANSPORTATION MFG. CORP								
	Additional O.E.M. Interchanges	12L569	○|○	85700	...		...	...

APPLICATION GUIDE - TRUCKS, TRAILERS AND BUSES

Year Ano Année	Model Modelo Modle	OEM #		Front			Rear	
				Fleetline	GasSLX		Fleetline	GasSLX
TRANSPORTATION MFG. CORP (CONT'D)								
	Additional O.E.M. Interchanges	12L570	O|O	85700	...		...	...
		12L-5-69	O|O	85700	...		...	...
		12L-5-70	O|O	85700	...		...	...
	City Cruiser	12TA0113	O|O	85303	89422		...	...
		12TA-01-13	O|O	85303	89422		...	...
	Drive Axle	12J52		...	...		85312	...
		12J54		...	...		85312	...
		12J510		...	...		85733	...
		12J-5-2		...	...		85312	...
		12J-5-4		...	...		85312	...
		12J-5-10		...	...		85733	...
	G 4500 Coach	12-05-6000	–|O	85711	...		...	...
		12-05-6002		...	...	O|O	85339	...
		12-05-6033		...	...	O|O	85339	...
		12056000	–|O	85711	...		...	...
		12056002		...	...	O|O	85339	...
		12056033		...	...	O|O	85339	...
	Low Floor Bus Models with O.E.M. Number	12L599		...	...	O|O	85339	...
		12L-5-99		...	...	O|O	85339	...
	Models with O.E.M. Number	12G51	O|O	85700	...		...	...
		12G-5-1	O|O	85700	...		...	...
		12T113	O|O	85303	89422		...	...
		12T-1-13	O|O	85303	89422		...	...
		680349		...	...	O|O	85702	...
		680470		...	...	O|O	85713	...
	RTS Bus with "V" Drive Rear	G1101590		...	...	O|O	85713	...
	RTS Bus with Regular Rear	22045526		...	...	O|O	85702	...
		22052014		...	...	O|O	85702	...
		G1011822		...	...	O|O	85702	...
	Tag Axle	12J59		...	...	O|O	85700	...
		12J-5-9		...	...	O|O	85700	...
TURTLETOP BUS								
	Odyssey Series Shuttle buses with Ford E450 Chassis To 2020	ASH-1136		...	...	–|O	G63623	...
	Odyssey Series Shuttle buses with Ford E450 Chassis To 2022	ASH-1154	–|O	G63622	...		...	...
	Terra Transit Series Shuttle buses with Ford E350 & E450 Chassis To 2020	ASH-1136		...	...	–|O	G63623	...
		ASH-1154	–|O	G63622	...		...	...
	Vanterra Series Shuttle buses with Ford E350 Chassis To 2020	ASH-1136		...	...	–|O	G63623	...
		ASH-1154	–|O	G63622	...		...	...
TUTHILL TECHNOLOGIES								
DRIVE AXLE								
	74AR - 30000 lb Capacity	12887-01		...	...	O|O	85013	89414
		1288701		...	...	O|O	85013	89414
	79KB Models	16725-01		...	...	O|O	83126	89430
		19495-01		...	...	O|O	83126	89430
		1672501		...	...	O|O	83126	89430
		1949501		...	...	O|O	83126	89430
	101A, 101AR Models	18166-01		...	...	O|O	85704	...
		1816601		...	...	O|O	85704	...
	102AR-7 Models	17794-01		...	...	O|O	83215	...
		1779401		...	...	O|O	83215	...
	102AR (Hvy Duty) Models	18286-01		...	...	O|O	89414	...
		1828601		...	...	O|O	89414	...
	102AR (Special) Models	17146-01		...	...	O|O	83209	89414

APPLICATION GUIDE - TRUCKS, TRAILERS AND BUSES

Year Ano Année	Model Modelo Modle	OEM #		Front			Rear	
				Fleetline	GasSLX		Fleetline	GasSLX
TUTHILL TECHNOLOGIES (CONT'D)								
DRIVE AXLE (cont'd)								
	102AR (Special) Models	1714601		...	...	○|○	83209	89414
	102AR (Standard) Models	12887-02		...	...	○|○	85013	89414
		1288702		...	...	○|○	85013	89414
	102AR for Western Star Models	19824-01		...	...	○|○	85006	...
		1982401		...	...	○|○	85006	...
	102AR-LM Models	19623-01		...	...	○|○	83123	89405
		1962301		...	...	○|○	83123	89405
	200 Models Air Suspension	20129-01		...	...	○|○	85007	...
		2012901		...	...	○|○	85007	...
	240AR Air-Ride Suspension	20125-01		...	...	○|○	85030	89440
		20126-01		...	...	○|○	89440	...
		2012501		...	...	○|○	85030	89440
		2012601		...	...	○|○	89440	...
	Models with O.E.M. Number	66502	○|○	646155				
STEER AXLE								
	1207 Models	17403-01	○|○	83122	89406		...	...
		1740301	○|○	83122	89406		...	...
	1209, 1212 Models	17358-01	○|○	83126	89430		...	...
		19495-01	○|○	83126	89430		...	...
		1735801	○|○	83126	89430		...	...
		1949501	○|○	83126	89430		...	...
	1209 (Alternate) Models	17408-01	○|○	85005	89430		...	...
		1740801	○|○	85005	89430		...	...
TRAILER								
	21B (Special) Models	18800-01		...	...	○|○	83203	89436
		1880001		...	...	○|○	83203	89436
	25 ART Models with O.E.M. Number	24392-01		...	...	○|○	85051	...
		2439201		...	...	○|○	85051	...
	25 ARU Models with O.E.M. Number	23553-01		...	...	○|○	85938	...
		2355301		...	...	○|○	85938	...
	30 ARUUL - 12 and -17 Models	23524-01		...	...	○|○	85738	...
		2352401		...	...	○|○	85738	...
	81S Models	12885-03		...	...	○|○	85300	89419
		1288503		...	...	○|○	85300	89419
	86 AR / RS 1015, 1035, 3015, 3035 Slider Air Suspension	18165-01		...	...	○|○	85006	...
		1816501		...	...	○|○	85006	...
	87-6, 87-9 Models	12885-01		...	...	○|○	85300	89419
		1288501		...	...	○|○	85300	89419
	87-14, -17 Models	16230-01		...	...	○|○	85702	...
		1623001		...	...	○|○	85702	...
	87 for Great Dane Models	18163-01		...	...	○|○	83207	89407
		18164-01		...	...	○|○	83122	89406
		1816301		...	...	○|○	83207	89407
		1816401		...	...	○|○	83122	89406
	Models with O.E.M. Number	1085		...	...	○|○	83214	...
		2697		...	...	○|○	85712	...
		16824-01		...	...	○|○	85006	...
		17142-01		...	...	○|○	85001	89410
		20960-01		...	...	○|○	83204	...
		21497-01		...	...	○|○	85005	89430
		680162		...	...	○|○	85300	89419
		702135-01		...	...	○|○	85045	...

APPLICATION GUIDE - TRUCKS, TRAILERS AND BUSES

Year Ano Année	Model Modelo Modle	OEM #		Front			Rear	
				Fleetline	GasSLX		Fleetline	GasSLX
TUTHILL TECHNOLOGIES (CONT'D)								
TRAILER (cont'd)								
	Models with O.E.M. Number	702136-01		...	...	O|O	85052	...
		702209-01		...	...	O|O	85014	...
		1682401		...	...	O|O	85006	...
		1714201		...	...	O|O	85001	89410
		2096001		...	...	O|O	83204	...
		2149701		...	...	O|O	85005	89430
		70213501		...	...	O|O	85045	...
		70213601		...	...	O|O	85052	...
		70220901		...	...	O|O	85014	...
		OE12425		...	...	O|O	83214	...
TWIN COACH								
	Models with O.E.M. Number	90044089		...	...	O|O	83124	89407
		90044089C		...	...	O|O	83124	89407
		90044162		...	...	O|O	83128	89436
		AR718CHD		...	...	O|O	85000	89436
		AR958		...	...	O|O	83207	89407
		AR-718-C-HD		...	...	O|O	85000	89436
		AR-958		...	...	O|O	83207	89407
UD								
1200								
99-04	Models with O.E.M. Number	561000T825	−|O	83515	...		...	...
		E61000T825	−|O	83515	...		...	...
1300								
05-07	Models with O.E.M. Number	561000T825	−|O	83515	...		...	...
		E61000T825	−|O	83515	...		...	...
1400								
94-10	Models with O.E.M. Number	561000T825	−|O	83515	...		...	...
		E61000T825	−|O	83515	...		...	...
1800								
89-94	Models with O.E.M. Number	56101Z5008	−|O	83114	...		...	...
		56101-Z5008	−|O	83114	...		...	...
		56110Z5008	−|O	83114	...		...	...
		56110-Z5008	−|O	83114	...		...	...
1800CS								
99-04	Models with O.E.M. Number	56101Z5008	−|O	83114	...		...	...
		56101-Z5008	−|O	83114	...		...	...
		56110Z5008	−|O	83114	...		...	...
		56110-Z5008	−|O	83114	...		...	...
2000								
89-94	Models with O.E.M. Number	56101Z5008	−|O	83114	...		...	...
		56101-Z5008	−|O	83114	...		...	...
		56110Z5008	−|O	83114	...		...	...
		56110-Z5008	−|O	83114	...		...	...
2600								
89-13	Models with O.E.M. Number	56101Z5014	−|O	83162	...		...	...

APPLICATION GUIDE - TRUCKS, TRAILERS AND BUSES

Year Ano Année	Model Modelo Modle	OEM #		Front			Rear	
				Fleetline	GasSLX		Fleetline	GasSLX
UD (CONT'D)								
2600 (cont'd)								
89-13	Models with O.E.M. Number	56101Z5017	−|○	**83162**	...		...	...
		56101-Z5014	−|○	**83162**	...		...	...
		56101-Z5017	−|○	**83162**	...		...	...
		56110Z5014	−|○	**83162**	...		...	...
		56110Z5017	−|○	**83162**	...		...	...
		56110-Z5014	−|○	**83162**	...		...	...
		56110-Z5017	−|○	**83162**	...		...	...
2800								
89-94	Models with O.E.M. Number	56101Z5014	−|○	**83162**	...		...	...
		56101Z5017	−|○	**83162**	...		...	...
		56101-Z5014	−|○	**83162**	...		...	...
		56101-Z5017	−|○	**83162**	...		...	...
		56110Z5014	−|○	**83162**	...		...	...
		56110Z5017	−|○	**83162**	...		...	...
		56110-Z5014	−|○	**83162**	...		...	...
		56110-Z5017	−|○	**83162**	...		...	...
3000								
95-00	Models with O.E.M. Number	56101Z5014	−|○	**83162**	...		...	...
		56101Z5017	−|○	**83162**	...		...	...
		56101-Z5014	−|○	**83162**	...		...	...
		56101-Z5017	−|○	**83162**	...		...	...
		56110Z5014	−|○	**83162**	...		...	...
		56110Z5017	−|○	**83162**	...		...	...
		56110-Z5014	−|○	**83162**	...		...	...
		56110-Z5017	−|○	**83162**	...		...	...
89-91	Models with O.E.M. Number	56101Z5014	−|○	**83162**	...		...	...
		56101Z5017	−|○	**83162**	...		...	...
		56101-Z5014	−|○	**83162**	...		...	...
		56101-Z5017	−|○	**83162**	...		...	...
		56110Z5014	−|○	**83162**	...		...	...
		56110Z5017	−|○	**83162**	...		...	...
		56110-Z5014	−|○	**83162**	...		...	...
		56110-Z5017	−|○	**83162**	...		...	...
3000HD								
92-94	Models with O.E.M. Number	56101Z5014	−|○	**83162**	...		...	...
		56101Z5017	−|○	**83162**	...		...	...
		56101-Z5014	−|○	**83162**	...		...	...
		56101-Z5017	−|○	**83162**	...		...	...
		56110Z5014	−|○	**83162**	...		...	...
		56110Z5017	−|○	**83162**	...		...	...
		56110-Z5014	−|○	**83162**	...		...	...
		56110-Z5017	−|○	**83162**	...		...	...
3000SD								
92-94	Models with O.E.M. Number	56101Z5014	−|○	**83162**	...		...	...
		56101Z5017	−|○	**83162**	...		...	...
		56101-Z5014	−|○	**83162**	...		...	...
		56101-Z5017	−|○	**83162**	...		...	...
		56110Z5014	−|○	**83162**	...		...	...
		56110Z5017	−|○	**83162**	...		...	...
		56110-Z5014	−|○	**83162**	...		...	...

APPLICATION GUIDE - TRUCKS, TRAILERS AND BUSES

Year Ano Année	Model Modelo Modle	OEM #		Front			Rear	
				Fleetline	GasSLX		Fleetline	GasSLX
UD (CONT'D)								
3000SD (cont'd)								
92-94	Models with O.E.M. Number	56110-Z5017	−|O	**83162**	...		...	...
3300								
99-13	Models with O.E.M. Number	56101Z5014	−|O	**83162**	...		...	...
		56101Z5017	−|O	**83162**	...		...	...
		56101-Z5014	−|O	**83162**	...		...	...
		56101-Z5017	−|O	**83162**	...		...	...
		56110Z5014	−|O	**83162**	...		...	...
		56110Z5017	−|O	**83162**	...		...	...
		56110-Z5014	−|O	**83162**	...		...	...
		56110-Z5017	−|O	**83162**	...		...	...
89-94	Models with O.E.M. Number	56101Z5014	−|O	**83162**	...		...	...
		56101Z5017	−|O	**83162**	...		...	...
		56101-Z5014	−|O	**83162**	...		...	...
		56101-Z5017	−|O	**83162**	...		...	...
		56110Z5014	−|O	**83162**	...		...	...
		56110Z5017	−|O	**83162**	...		...	...
		56110-Z5014	−|O	**83162**	...		...	...
		56110-Z5017	−|O	**83162**	...		...	...
UNITED MANUFACTURING								
	Models with O.E.M. Number	K9641		...	...	O|O	**85304**	...
		K-96-41		...	...	O|O	**85304**	...
UNIVERSAL COACH								
	Models with O.E.M. Number	12-05-1199		...	...		**85729**	...
		680777		...	...		**85729**	...
		12051199		...	...		**85729**	...
UPS TRUCK								
	Models with O.E.M. Number	P117099		...	...		**83120**	...
		P117146	O|O	**83118**	...		...	...
UTILITY TRAILER MANUFACTURING COMPANY								
FLATBEDS								
	4000A Model Trailers with Hendrickson AANT 23K Intraax Air Ride	B23361		...	...	O|O	**85911**	...
		B23566		...	...	O|O	**85000**	**89436**
		B24023		...	...	O|O	**85738**	...
		B24125		...	...	O|O	**85323**	**89436**
		B-23361		...	...	O|O	**85911**	...
		B-23566		...	...	O|O	**85000**	**89436**
		B-24023		...	...	O|O	**85738**	...
		B-24125		...	...	O|O	**85323**	**89436**
	Drop Deck Trailers with Hendrickson AANL 23K Intraax Air Ride	B23651		...	...	O|O	**85045**	...
		B24579		...	...	O|O	**85939**	...
		B25515		...	...	O|O	**85338**	...
		B-23651		...	...	O|O	**85045**	...
		B-24579		...	...	O|O	**85939**	...
		B-25515		...	...	O|O	**85338**	...
REEFERS & DRY VANS								
	3000R Multi-Temp Trailers with Hendrickson HKANT 40K Vantraax Air Ride	B24088		...	...	O|O	**83389**	**89436**

Year Ano Année	Model Modelo Modle	OEM #		Front			Rear	
				Fleetline	GasSLX		Fleetline	GasSLX
UTILITY TRAILER MANUFACTURING COMPANY (CONT'D)								
REEFERS & DRY VANS (cont'd)								
	3000R Multi-Temp Trailers with Hendrickson HKANT 40K Vantraax Air Ride	B24088		...	...	O|O	85000	89436
		B-24088		...	...	O|O	83389	89436
		B-24088		...	...	O|O	85000	89436
		S24088		...	...	O|O	83389	89436
		S24088		...	...	O|O	85000	89436
		S-24088		...	...	O|O	83389	89436
		S-24088		...	...	O|O	85000	89436
	4000D Trailers with Hendrickson HKANT 40K Vantraax Air Ride	B24088		...	...	O|O	83389	89436
		B24088		...	...	O|O	85000	89436
		B-24088		...	...	O|O	83389	89436
		B-24088		...	...	O|O	85000	89436
		S24088		...	...	O|O	83389	89436
		S24088		...	...	O|O	85000	89436
		S-24088		...	...	O|O	83389	89436
		S-24088		...	...	O|O	85000	89436
	4000D-X Composite Trailers with Hendrickson HKANT 40K Vantraax Air Ride	B24088		...	...	O|O	83389	89436
		B24088		...	...	O|O	85000	89436
		B-24088		...	...	O|O	83389	89436
		B-24088		...	...	O|O	85000	89436
		S24088		...	...	O|O	83389	89436
		S24088		...	...	O|O	85000	89436
		S-24088		...	...	O|O	83389	89436
		S-24088		...	...	O|O	85000	89436
VAN HOOL								
	T811, T812, T813, T814 Buses	6243-14040	−|−	85708	...		...	...
		665563	−|−	85708	...		...	...
		624314040	−|−	85708	...		...	...
	T815 4D Buses	6243-14040		...	...	−|−	85708	...
		665563		...	...	−|−	85708	...
		624314040		...	...	−|−	85708	...
	TL 13/14 Buses	6243-13790	−|−	85708	...		...	...
		665562	−|−	85708	...		...	...
		624313790	−|−	85708	...		...	...
VARIOUS								
STEERING STABILIZER								
	Various Class 8 Trucks with Front Axle Rating of 10,000 lb to 20,000 lb	SC2920	O|O	83176				
		SC-2920	O|O	83176				
VOLVO								
VAH								
11-14	Sleepers with O.E.M. Number	20721254	O|O	83048				
		22662224	O|O	83048				
11-20	VAH DayCab Models with O.E.M. Number	22662230	O|O	83905				
VAH 430								
17-19	Models with 42" Sleeper Cabs	20721254	O|O	83048				
		22662224	O|O	83048				
17-19	VAH 430 Models with Hendrickson HAS 400 or 460 Series Rear Suspension	60675-001		...	...	O|O	85978	...
		60675-001L		...	...	O|O	85978	...
		8083872		...	...	O|O	85978	...
		60675001		...	...	O|O	85978	...

Year Ano Année	Model Modelo Modle	OEM #		Front			Rear	
				Fleetline	GasSLX		Fleetline	GasSLX
VOLVO (CONT'D)								
VAH 430 (cont'd)								
17-19	VAH 430 Models with Hendrickson HAS 400 or 460 Series Rear Suspension	60675001L		...	...	○|○	85978	...
VHD								
08-09	VHD Models - With O.E.M. Number	20704334	○|○	83048				
		22662125	○|○	83048				
01-20	Models with Hendrickson HMX 400/460 Haulmax with 16.5" Saddle	60680-004		...	...		83143	...
02-21	VHD Models - With O.E.M. Number	8078546	○|○	83028				
06-22	Models with Hendrickson 40,000 lb Pimaax EX and FireMaax EX Air Suspension	60657-007		...	...	○|○	85072	...
		20782199		...	...	○|○	85072	...
		60657007		...	...	○|○	85072	...
08-22	Models with T-Ride Rear Suspension	20433427		...	...		85065	...
		471700131256		...	...		85065	...
10-22	Models with Neway ADZ Rear Suspension	90045605		...	...	○|○	85109	...
		90045803		...	...	○|○	85109	...
		90045812		...	...	○|○	85109	...
		471700004423		...	...	○|○	85109	...
		471700013186		...	...	○|○	85109	...
01-23	Models with Hendrickson HMX 400/460 Haulmax with 16.5" Saddle	60680-004L		...	...		83143	...
		60680004		...	...		83143	...
		60680004L		...	...		83143	...
01-23	Models with Hendrickson HMX 400/460 Haulmax with 17.5" & 18.5" Saddle	60680-005		...	...		83142	...
		60680-005L		...	...		83142	...
		60680005		...	...		83142	...
		60680005L		...	...		83142	...
02-23	Models with 12,000 to 22,000 lb Front Axles	20353932		85081	...		...	...
		20414440		85081	...		...	...
		20433426		85081	...		...	...
		20434880		85081	...		...	...
		471700131258		85081	...		...	...
		SDA471700131258		85081	...		...	...
11-23	DayCab Models with O.E.M. Number	22662230	○|○	83905				
2006	All with Neway AD-246 Air Suspension	20707753		...	...	○|○	85906	89407
		90045132		...	...	○|○	85906	89407
2006	Models with Hendrickson HAS Series Rear Suspension	60675-13		...	...	○|○	85036	89405
		6067513		...	...	○|○	85036	89405
		22314111		...	...	○|○	85036	89405
		23568046		...	...	○|○	85036	89405
VN								
1999	Models with O.E.M. Number	8086651		...	...	○|○	85066	89448
		20433425		...	...	○|○	85066	89448
		85104221		...	...	○|○	85066	89448
		471700002627		...	...	○|○	85066	89448
2004	Models with O.E.M. Number	8086651		...	...	○|○	85066	89448
		20433425		...	...	○|○	85066	89448
		85104221		...	...	○|○	85066	89448
		471700002627		...	...	○|○	85066	89448
VNL								
00-10	Models with 12,000 - 13,200 lb Front Axles	8071881	○|○	85061	89450		...	...
		20433424	○|○	85061	89450		...	...
		20973993	○|○	85061	89450		...	...
		23288402	○|○	85061	89450		...	...
00-11	Models with 38,000 lb Rear Air Suspension	20433425		...	...	○|○	85066	89448

VOLVO (CONT'D)

VNL (cont'd)

Year Ano Année	Model Modelo Modle	OEM #		Front Fleetline	Front GasSLX		Rear Fleetline	Rear GasSLX
00-11	Models with 38,000 lb Rear Air Suspension	20551628		...	...	○|○	85066	89448
		471700000443		...	...	○|○	85066	89448
		471700002627		...	...	○|○	85066	89448
15-18	VNL 64T-730 Models with Mid Rise Sleeper Cabs	22662237	○|○	83905				
15-18	VNL 64T-780 Models with High Rise Sleeper Cabs	22662237	○|○	83905				
05-19	Models with Hendrickson Airtek	64838-003	○|○	85933	89454		...	...
		64838-003L	○|○	85933	89454		...	...
		20485632	○|○	85933	89454		...	...
		20485633	○|○	85933	89454		...	...
		21137330	○|○	85933	89454		...	...
		64838003	○|○	85933	89454		...	...
		64838003L	○|○	85933	89454		...	...
		471700003832	○|○	85933	89454		...	...
14-19	VNL 64T-670 Models with High Rise Sleeper Cabs	22662235	○|○	83905				
18-19	VNL 64T-740 Models with High Rise Sleeper Cabs	22662237	○|○	83905				
08-20	Models with Sleeper Cabs with O.E.M. Number	20704334	○|○	83048				
		20721254	○|○	83048				
		21391412	○|○	83048				
		22662125	○|○	83048				
		22866844	○|○	83048				
11-21	VNL 64T-300 DayCab Models with O.E.M. Number	21368411	○|○	83905				
10-22	Models with Neway ADZ Rear Suspension	90045605		...	...	○|○	85109	...
		90045803		...	...	○|○	85109	...
		90045812		...	...	○|○	85109	...
		471700004423		...	...	○|○	85109	...
		471700013186		...	...	○|○	85109	...
21-22	300 Models with O.E.M. Number	23159761		...	...	○|○	85188	...
		23159763		...	...	○|○	85188	...
		471700014318		...	...	○|○	85188	...
11-23	VNL 42T-300 Models - With O.E.M. Number	22662230	○|○	83905				
11-23	VNL 64T-300 DayCab Models with O.E.M. Number	22662230	○|○	83905				
18-23	VNL 64T-860 Models with High Rise Sleeper Cabs	22662237	○|○	83905				

VNL 300

16-19	Models with Hendrickson Airtek	64838-003	○|○	85933	89454		...	...
		64838-003L	○|○	85933	89454		...	...
		20485632	○|○	85933	89454		...	...
		20485633	○|○	85933	89454		...	...
		21137330	○|○	85933	89454		...	...
		64838003	○|○	85933	89454		...	...
		64838003L	○|○	85933	89454		...	...
		471700003832	○|○	85933	89454		...	...
16-20	DayCab Models with O.E.M. Number	21368411	○|○	83905				
		22662230	○|○	83905				
16-20	Models with 12,000 - 13,200 lb Front Axles	21436086	○|○	85098	89502		...	...
		141700005838	○|○	85098	89502		...	...
16-20	Models with 40,000 lb Rear Air Suspension	21462378		...	...	○|○	85088	...
		471700006038		...	...	○|○	85088	...
16-20	Models with Hendrickson 40,000 lb Pimaax EX and FireMaax EX Air Suspension	60657-007		...	...	○|○	85072	...
		20782199		...	...	○|○	85072	...
		60657007		...	...	○|○	85072	...
16-20	Models with Mid-Roof Sleeper Cabs	20704334	○|○	83048				
		22662125	○|○	83048				

APPLICATION GUIDE - TRUCKS, TRAILERS AND BUSES

Year Ano Année	Model Modelo Modle	OEM #		Front			Rear	
				Fleetline	GasSLX		Fleetline	GasSLX
VOLVO (CONT'D)								
VNL 300 (cont'd)								
16-20	Models with Mid-Roof Sleeper Cabs	22866844	O|O	**83048**				
VNL 430								
15-16	Models with 12,500 - 14,600 lb Front Axle	21436086	O|O	**85098**	**89502**		...	...
		141700005838	O|O	**85098**	**89502**		...	...
15-16	Models with 40,000 lb Rear Air Suspension	21462380		...	...	O|O	**85088**	...
		471700006040		...	...	O|O	**85088**	...
15-16	Models with Mid-Roof Sleeper Cabs	21391412	O|O	**83048**				
VNL 630								
15-16	Models with 12,500 - 14,600 lb Front Axle	21436086	O|O	**85098**	**89502**		...	...
		141700005838	O|O	**85098**	**89502**		...	...
15-16	Models with 40,000 lb Rear Air Suspension	21462380		...	...	O|O	**85088**	...
		471700006040		...	...	O|O	**85088**	...
15-16	Models with Hendrickson Airtek	64838-003	O|O	**85933**	**89454**		...	...
		64838-003L	O|O	**85933**	**89454**		...	...
		20485632	O|O	**85933**	**89454**		...	...
		20485633	O|O	**85933**	**89454**		...	...
		21137330	O|O	**85933**	**89454**		...	...
		64838003	O|O	**85933**	**89454**		...	...
		64838003L	O|O	**85933**	**89454**		...	...
		471700003832	O|O	**85933**	**89454**		...	...
15-16	Models with Mid-Roof Sleeper Cabs	21391412	O|O	**83048**				
VNL 670								
15-16	Models with 12,500 - 14,600 lb Front Axle	21436086	O|O	**85098**	**89502**		...	...
		141700005838	O|O	**85098**	**89502**		...	...
15-16	Models with 40,000 lb Rear Air Suspension	21462380		...	...	O|O	**85088**	...
		471700006040		...	...	O|O	**85088**	...
15-16	Models with Hendrickson Airtek	64838-003	O|O	**85933**	**89454**		...	...
		64838-003L	O|O	**85933**	**89454**		...	...
		20485632	O|O	**85933**	**89454**		...	...
		20485633	O|O	**85933**	**89454**		...	...
		21137330	O|O	**85933**	**89454**		...	...
		64838003	O|O	**85933**	**89454**		...	...
		64838003L	O|O	**85933**	**89454**		...	...
		471700003832	O|O	**85933**	**89454**		...	...
15-16	Models with Mid-Roof Sleeper Cabs	21391412	O|O	**83048**				
15-16	Sleeper Cab Models with O.E.M. Number	22662235	O|O	**83905**				
VNL 740								
17-19	Models with Hendrickson Airtek	64838-003	O|O	**85933**	**89454**		...	...
		64838-003L	O|O	**85933**	**89454**		...	...
		20485632	O|O	**85933**	**89454**		...	...
		20485633	O|O	**85933**	**89454**		...	...
		21137330	O|O	**85933**	**89454**		...	...
		64838003	O|O	**85933**	**89454**		...	...
		64838003L	O|O	**85933**	**89454**		...	...
		471700003832	O|O	**85933**	**89454**		...	...
17-20	Models with 12,500 - 14,600 lb Front Axle	21436086	O|O	**85098**	**89502**		...	...
		141700005838	O|O	**85098**	**89502**		...	...
17-20	Models with 40,000 lb Rear Air Suspension	21462380		...	...	O|O	**85088**	...
		471700006040		...	...	O|O	**85088**	...
17-20	Models with Mid-Roof Sleeper Cabs	20704334	O|O	**83048**				

Year Ano Année	Model Modelo Modle	OEM #		Front			Rear	
				Fleetline	GasSLX		Fleetline	GasSLX
VOLVO (CONT'D)								
VNL 740 (cont'd)								
17-20	Models with Mid-Roof Sleeper Cabs	22866844	O|O	83048				
2020	Models with 13,200 lb to 14,600 lb Front Axle	23288403	O|O	85061	89450		...	...
		41700014316	O|O	85061	89450		...	...
2020	Models with 40,000 lb Rear Air Suspension	23159761		...	...	O|O	85188	...
		23159763		...	...	O|O	85188	...
		471700014318		...	...	O|O	85188	...
VNL 760								
17-19	Models with Hendrickson Airtek	64838-003	O|O	85933	89454		...	...
		64838-003L	O|O	85933	89454		...	...
		20485632	O|O	85933	89454		...	...
		20485633	O|O	85933	89454		...	...
		21137330	O|O	85933	89454		...	...
		64838003	O|O	85933	89454		...	...
		64838003L	O|O	85933	89454		...	...
		471700003832	O|O	85933	89454		...	...
17-20	Models with 12,500 - 14,600 lb Front Axle	21436086	O|O	85098	89502		...	...
		141700005838	O|O	85098	89502		...	...
17-20	Models with 40,000 lb Rear Air Suspension	21462380		...	...	O|O	85088	...
		471700006040		...	...	O|O	85088	...
17-20	Models with Hendrickson HAS 400 or 460 Series Rear Suspension	60675-001		...	...	O|O	85978	...
		60675-001L		...	...	O|O	85978	...
		8083872		...	...	O|O	85978	...
		60675001		...	...	O|O	85978	...
		60675001L		...	...	O|O	85978	...
17-20	Models with Mid-Roof Sleeper Cabs	20704334	O|O	83048				
		22866844	O|O	83048				
2020	Models with 13,200 lb to 14,600 lb Front Axle	23288403	O|O	85061	89450		...	...
		41700014316	O|O	85061	89450		...	...
2020	Models with 40,000 lb Rear Air Suspension	23159761		...	...	O|O	85188	...
		23159763		...	...	O|O	85188	...
		471700014318		...	...	O|O	85188	...
VNL 860								
17-20	Models with 12,500 - 14,600 lb Front Axle	21436086	O|O	85098	89502		...	...
		141700005838	O|O	85098	89502		...	...
17-20	Models with 40,000 lb Rear Air Suspension	21462380		...	...	O|O	85088	...
		471700006040		...	...	O|O	85088	...
17-20	Sleeper Cab Models with O.E.M. Number	22662237	O|O	83905				
VNM								
13-17	VNM 64T-200 Day Cab Models	21368411	O|O	83905				
		22662237	O|O	83905				
11-18	Models with 12,000 - 14,600 lb Front Axle	21436086	O|O	85098	89502		...	...
		141700005838	O|O	85098	89502		...	...
13-18	VNM 64T-200 Day Cab Models	22662230	O|O	83905				
2013	VNM 42T-200 Day Cab Models	21368411	O|O	83905				
2016	VNM 64T-630 Models with High Rise Sleeper Cabs	22662235	O|O	83905				
VNR								
18-19	300 Models with 40,000 lb Rear Air Suspension	21462378		...	...	O|O	85088	...
		471700006038		...	...	O|O	85088	...
18-19	400 Models with 38,000 lb Rear Air Suspension	21462380		...	...	O|O	85088	...
		471700006040		...	...	O|O	85088	...

Year Ano Année	Model Modelo Modle	OEM #		Front			Rear	
				Fleetline	GasSLX		Fleetline	GasSLX
VOLVO (CONT'D)								
VNR (cont'd)								
18-19	Models with 12,500 lb Front Axle	21436086	O|O	**85098**	**89502**		...	...
		141700005838	O|O	**85098**	**89502**		...	...
18-19	Models with Hendrickson Airtek	64838-003	O|O	**85933**	**89454**		...	...
		64838-003L	O|O	**85933**	**89454**		...	...
		21137330	O|O	**85933**	**89454**		...	...
		64838003	O|O	**85933**	**89454**		...	...
		64838003L	O|O	**85933**	**89454**		...	...
		471700003832	O|O	**85933**	**89454**		...	...
18-23	Day Cab Models with O.E.M. Number	22662230	O|O	**83905**				
		22662235	O|O	**83905**				
21-23	300 Models with O.E.M. Number	23159761		...	...	O|O	**85188**	...
		23159763		...	...	O|O	**85188**	...
		471700014318		...	...	O|O	**85188**	...
21-23	Models with 12,000 lb to 12,500 lb Front Axle	23288402	O|O	**85061**	**89450**		...	...
21-23	Models with 13,200 lb to 14,600 lb Front Axle	23288403	O|O	**85061**	**89450**		...	...
2018	Models with Hendrickson HAS 400 or 460 Series Rear Suspension	60675-001		...	...	O|O	**85978**	...
		60675-001L		...	...	O|O	**85978**	...
		8083872		...	...	O|O	**85978**	...
		60675001		...	...	O|O	**85978**	...
		60675001L		...	...	O|O	**85978**	...
VNR 300								
17-20	Models with O.E.M. Number	22662230	O|O	**83905**				
VNR 400								
17-20	Models with O.E.M. Number	22662235	O|O	**83905**				
VNR 640								
17-20	Models with O.E.M. Number	22662235	O|O	**83905**				
VNX								
14-17	Models with 12,500 - 14,600 lb Front Axle	21436086	O|O	**85098**	**89502**		...	...
		141700005838	O|O	**85098**	**89502**		...	...
15-17	Models with Neway ADZ Rear Suspension	90045605		...	...	O|O	**85109**	...
		90045803		...	...	O|O	**85109**	...
		90045812		...	...	O|O	**85109**	...
		471700004423		...	...	O|O	**85109**	...
		471700013186		...	...	O|O	**85109**	...
15-17	VNX DayCab Models with O.E.M. Number	21368411	O|O	**83905**				
		22662230	O|O	**83905**				
19-20	Models with 12,500 - 14,600 lb Front Axle	21436086	O|O	**85098**	**89502**		...	...
		141700005838	O|O	**85098**	**89502**		...	...
19-20	VNX DayCab Models with O.E.M. Number	21368411	O|O	**83905**				
		22662230	O|O	**83905**				
19-21	Models with Neway ADZ Rear Suspension	90045605		...	...	O|O	**85109**	...
		90045803		...	...	O|O	**85109**	...
		90045812		...	...	O|O	**85109**	...
		471700004423		...	...	O|O	**85109**	...
		471700013186		...	...	O|O	**85109**	...
19-21	VNX 84T-740 Models with High Rise Sleeper Cabs	22866844	O|O	**83048**				
VT								
06-10	64T-830 Models with 40,000 lb Rear Air Suspension	20551628		...	...	O|O	**85066**	**89448**

APPLICATION GUIDE - TRUCKS, TRAILERS AND BUSES

Year Ano Année	Model Modelo Modle	OEM #		Front			Rear	
				Fleetline	GasSLX		Fleetline	GasSLX
VOLVO (CONT'D)								
VT (cont'd)								
06-10	64T-830 Models with 40,000 lb Rear Air Suspension	471700000443		...	...	O|O	85066	89448
06-10	64T-830 Models with Hendrickson 40,000 lb Primaax, Pimaax EX and FireMaax EX Air Suspension	60657-007		...	...	O|O	85072	...
		60657007		...	...	O|O	85072	...
06-10	64T-880 Models with Hendrickson 40,000 lb Pimaax EX and FireMaax EX Air Suspension	20782199		...	...	O|O	85072	...
06-10	All Models with 12,000 - 13,200 lb Front Axles	8071881	O|O	85061	89450		...	...
		20433424	O|O	85061	89450		...	...
		20973993	O|O	85061	89450		...	...
06-10	All with 60" to 77" Mid - High Roof Sleepers (w/O.E.M. Number)	20721254	O|O	83048				
WG								
97-01	Models with Hendrickson HN - 402 or HN - 462 Rear Suspension	57241-3		...	...		83112	...
		60680-003		...	...		83112	...
		60680-003L		...	...		83112	...
		572413		...	...		83112	...
		60680003		...	...		83112	...
		60680003L		...	...		83112	...
1996	Models with Hendrickson HN - 402 Rear Suspension	57241-3		...	...		83112	...
		60680-003		...	...		83112	...
		60680-003L		...	...		83112	...
		572413		...	...		83112	...
		60680003		...	...		83112	...
		60680003L		...	...		83112	...
WX								
96-04	Models with Hendrickson HN - 402 Rear Suspension	57241-3		...	...		83112	...
		60680-003		...	...		83112	...
		60680-003L		...	...		83112	...
		572413		...	...		83112	...
		60680003		...	...		83112	...
		60680003L		...	...		83112	...
ADDITIONAL APPLICATIONS								
78-83	RC2	.....		...	...	O|O	83122	89406
	1500 Models	.....	O|O	83122	89406		...	...
		35901-0005		...	...	O|O	83219	...
		530596		...	...	O|O	85308	89422
		359010005		...	...	O|O	83219	...
	3000, 4000 & 9000 Models - Special Unit - Four Shock Absorbers Required Per Axle	676081	O|O	83401	...		...	...
		676082	O|O	83401	...		...	...
		5554959	O|O	83401	...		...	...
	3014, 3015, 3016, 3020 C.O.E. and 1500	.....	O|O	83122	89406		...	...
	9000 Models	.....	O|O	83122	89406		...	...
	Brigadier Models	22012065	O|O	85304	...		...	...
		22046483	O|O	85304	...		...	...
		22052336	O|O	85304	...		...	...
	Models with Hendrickson Airtek	64838-001	O|O	85933	89454		...	...
		64838-002	O|O	85933	89454		...	...
		20469001	O|O	85933	89454		...	...
		20469002	O|O	85933	89454		...	...
		64838001	O|O	85933	89454		...	...
		64838002	O|O	85933	89454		...	...
		471700131920	O|O	85933	89454		...	...

Year Ano Année	Model Modelo Modle	OEM #		Front			Rear	
				Fleetline	GasSLX		Fleetline	GasSLX
VOLVO (CONT'D)								
ADDITIONAL APPLICATIONS (cont'd)								
	Models with Hendrickson Airtek	471700131921	O|O	**85933**	**89454**		...	...
	Models with Hendrickson HN - 400 Rear suspension	3971703		...	...		**83112**	...
	Road Boss, Road Boss II, Road Commander, Road Commander II, Road Expeditor II - (Four Shocks per Axle)	02-7005976	–|–	**83400**	...		...	...
		02-7005977	–|–	**83400**	...		...	...
		4975479	–|–	**83400**	...		...	...
		4975480	–|–	**83400**	...		...	...
		027005976	–|–	**83400**	...		...	...
		027005977	–|–	**83400**	...		...	...
	Road Boss, Road Boss II, Road Commander II, Road Expeditor - (Four Shocks per Axle)	3946210	–|–	**83103**	...		...	...
ADDITIONAL O.E.M. INTERCHANGES								
	Additional O.E.M. Interchanges	3945816	O|O	**89430**				
B - SERIES - BUS COWL CHASSIS								
77-89	B - 600, B - 700, B - 750, B - 800, B - 7000 with 18500 lb. Axle	ASH24446		...	...	O|O	**83215**	...
		ASH-24446		...	...	O|O	**83215**	...
		AX310		...	...	O|O	**83215**	...
		AX-310		...	...	O|O	**83215**	...
		D7HT18080AA		...	...	O|O	**83215**	...
		D7HT18080DA		...	...	O|O	**83215**	...
		D7HT-18080-AA		...	...	O|O	**83215**	...
		D7HT-18080-DA		...	...	O|O	**83215**	...
		E0HT18080AA		...	...	O|O	**83215**	...
		E0HT-18080-AA		...	...	O|O	**83215**	...
90-96	B - 600, B - 700, B - 750, B - 800, B - 7000 with 18500 lb Axle	ASH24446		...	...	O|O	**83215**	...
		ASH-24446		...	...	O|O	**83215**	...
		AX310		...	...	O|O	**83215**	...
		AX-310		...	...	O|O	**83215**	...
		D7HT18080AA		...	...	O|O	**83215**	...
		D7HT18080DA		...	...	O|O	**83215**	...
		D7HT-18080-AA		...	...	O|O	**83215**	...
		D7HT-18080-DA		...	...	O|O	**83215**	...
		E0HT18080AA		...	...	O|O	**83215**	...
		E0HT-18080-AA		...	...	O|O	**83215**	...
FE SERIES								
	FE6 Models	6857668	–|O	**83105**	...		...	...
		6876828	–|O	**83105**	...		...	...
	FE7 Models up to Chassis No. 20855	1505190		...	...	–|–	**85722**	...
	FE7 Models with Rear Air Suspension (Drive Axle)	1591501		...	...	–|–	**85722**	...
	FE611, FE614 Front after CH419306	6794358	O|O	**85040**	...		...	...
	FE614 Tractor	6790756		...	...	O|O	**83215**	...
		6794358	O|O	**85040**	...		...	...
	FE615, FE715	6772218	O|O	**85040**	...		...	...
		6775412	O|O	**85040**	...		...	...
	FE715 with Rear Parabolic Spring	6790756		...	...	O|O	**83215**	...
	Models with Rear Air Suspension and O.E.M. Number	8056892		...	...	O|O	**85023**	**89415**
	Additional O.E.M. Interchanges	03-1106460	O|O	**85005**	**89430**		...	...
		494-660	O|O	**83219**				
		35901-0003	O|O	**85301**				
		35901-0004		...	...	O|O	**83219**	...
		35901-0011		...	...	O|O	**83123**	**89405**
		35901-0017	O|O	**83314**	...		...	...

VOLVO (CONT'D)

Year Ano Année	Model Modelo Modle	OEM #		Front			Rear	
				Fleetline	GasSLX		Fleetline	GasSLX
	Additional O.E.M. Interchanges	35901-0022		...	...		83635	...
		35901-3406	O|O	85305				
		35901-3409	O|O	85304				
		35901-3410	O|O	85307				
		35901-3413	O|O	85006				
		35901-3420	O|O	85303 or 89422				
		37001-5	O|O	83401	...		...	...
		37301-0001	O|O	85013 or 89414				
		37301-0018	O|O	85005 or 89430				
		370015	O|O	83401	...		...	...
		494660	O|O	83219				
		629398	O|O	85307				
		629501	O|O	85307				
		646220	O|O	85734				
		668302	O|O	83216				
		1091347	O|O	83125				
		1091348	O|O	83122 or 89406				
		1091349		...	...	O|O	83204	...
		1091350	O|O	83207 or 89407				
		1091351	O|O	83209 or 89414				
		1091353	O|O	83215				
		1091354	O|O	83216				
		1091357		...	...	O|O	83219	...
		1091358	–|–	83456	89447		...	...
		1091359		...	...	O|O	83123	89405
		1091360	O|O	83303	...		...	...
		1091362	O|O	83309	...		...	...
		1091363	O|O	83221				
		1091364	O|O	83312	89409		...	...
		1091365	–|–	83400	...		...	...
		1091366	O|O	83401	...		...	...
		1091367		...	...	O|O	85000	89436
		1091368		...	...	O|O	85003	89411
		1091370	O|O	85006				
		1091371	O|O	85300 or 89419				
		1091372	O|O	85301				
		1091373	O|O	85302 or 89420				
		1091374	O|O	85303 or 89422				
		1091375	O|O	85304				
		1091376	O|O	85305				
		1091377	O|O	85307				
		1091378	O|O	85308 or 89422				
		1091379		...	...	–|–	85310	89423
		1093100	–|–	85027	...		...	...
		1093176		...	...	O|O	85024	...
		1093178		85026	...		...	...
		1093180	O|O	85030 or 89440				
		1716824	O|O	85304				
		3130140	O|O	85315				
		3171696	O|O	85307				
		3172948	O|O	85303 or 89422				
		3199937	–|O	85316	89426		...	...
		3199938	O|O	85030 or 89440				
		3199939	O|O	85058	89431		...	...
		3199940	O|O	85005 or 89430				

VOLVO (CONT'D)

Year Ano Année	Model Modelo Modle	OEM #		Front			Rear	
				Fleetline	GasSLX		Fleetline	GasSLX
	Additional O.E.M. Interchanges	3199941	o|o	85006				
		3199942	o|o	89402	...		...	...
		3199943	o|o	85012 or 89413				
		3199944	o|o	85006				
		3199945	–|–	85027	...		...	...
		3199946		...	...	–|o	85033	89427
		3199947	o|o	85013 or 89414				
		3199948		...	...	–|o	85311	89424
		3199949		...	...	–|–	85310	89423
		3199950	o|o	85023 or 89415				
		3199951		...	...	o|o	85024	...
		3199952	o|o	85736				
		3199953		...	...	–|o	85319	89428
		3199954		...	...	o|o	85003	89411
		3199955	o|o	85300 or 89419				
		3199956	o|o	85036	89405		...	...
		3199957	o|o	83122 or 89406				
		3199959		...	...	o|o	85323	89436
		3199960		...	...	o|o	85322	...
		3199961	o|o	85307				
		3199962		...	...	o|o	85314	89425
		3199963	o|o	85315				
		3199965	o|o	85736				
		3199966	o|o	85303 or 89422				
		3199967	o|o	85302 or 89420				
		3199968	o|o	85308 or 89422				
		3199972	o|o	85320	89429		...	...
		3199973	–|–	85722				
		3199974	o|o	85712				
		3199975	o|o	85700				
		3199976	–|o	85711				
		3199977	–|o	85711				
		3199978	o|o	85712				
		3199979	o|o	85702				
		3199980		...	...	–|–	85310	89423
		3199983		...	...	o|o	85704	...
		3199984		...	...	o|o	85314	89425
		3199985		85723				
		3199986		...	...	–|–	85318	...
		3199987	–|–	85705 or 89447				
		3199988		...	...	–|o	85311	89424
		3199989	–|–	85709				
		3199990		...	...	o|o	85003	89411
		3199991	–|–	85708				
		3199992		85733				
		3199993	o|o	85712				
		3199994	o|o	85308 or 89422				
		3915917		...	...	–|o	85319	89428
		3915947	o|o	85001 or 89410				
		3915948		...	...	–|o	85311	89424
		3916352	o|o	85013 or 89414				
		3919055		...	...	o|o	85007	...
		3919056	o|o	83203 or 89436				
		3919057	o|o	83225				
		3919526	o|o	83314	...		...	...

VOLVO (CONT'D)

Year Ano Année	Model Modelo Modle	OEM #		Front			Rear	
				Fleetline	GasSLX		Fleetline	GasSLX
	Additional O.E.M. Interchanges	3919561		...	...	O|O	85314	89425
		3919565	–|–	83103				
		3919567	–|–	83613				
		3919569		...	...	O|O	85052	...
		3919570		...	...	O|O	83128	89436
		3919571		...	...		83635	...
		3919572		...	...	O|O	83130	...
		3919573		...	...	O|O	83123	89405
		3919574	O|O	85006				
		3919575		...	...		83120	...
		3919582	O|O	83215				
		3919585	O|O	83209 or 89414				
		3919587	–|O	83105	...		...	...
		3919588	O|O	83216				
		3919589		85026	...		...	...
		3919591	–|O	83515	...		...	...
		3919592		...	...	O|O	85024	...
		3919593	O|O	83242				
		3919594		...	...	O|O	85003	89411
		3919598	O|O	83312	89409		...	...
		3919900	O|O	85012 or 89413				
		3919901	–|–	83103				
		3919902	O|O	83126 or 89430				
		3919903	O|O	83216				
		3919904	O|O	G63183				
		3919906	O|O	83308				
		3919907	O|O	83309	...		...	...
		3919909	O|O	G63605				
		3919910	O|O	83221				
		3919911	O|O	83124 or 89407				
		3919912	O|O	83215				
		3919913	O|O	83203 or 89436				
		3919914	O|O	83209 or 89414				
		3919915	O|O	83127				
		3919916	O|O	83126 or 89430				
		3919917	O|O	83125				
		3919918	O|O	83401	...		...	...
		3919919	O|O	G63625				
		3919920	O|O	83303	...		...	...
		3919921		...	...	O|O	83123	89405
		3919922	–|–	83318	...		...	...
		3919923		...	...	–|O	83301	...
		3919924	–|–	83456	89447		...	...
		3919925		...	...	–|O	83317	...
		3919926	O|O	G63403				
		3919927	O|O	83101				
		3919928	O|O	83225				
		3919931	O|O	83126 or 89430				
		3919932	O|O	85062	89408		...	...
		3919933	O|O	85001 or 89410				
		3919934	O|O	85320	89429		...	...
		3919935		85026	...		...	...
		3919936	O|O	83207 or 89407				
		3919937	–|O	85316	89426		...	...
		3919938	O|O	85030 or 89440				

VOLVO (CONT'D)

Year Ano Année	Model Modelo Modle	OEM #		Front			Rear	
				Fleetline	GasSLX		Fleetline	GasSLX
	Additional O.E.M. Interchanges	3919939	○|○	85058	89431		...	...
		3919940	○|○	85005 or 89430				
		3919941	○|○	85006				
		3919942	○|○	89402				
		3919943	○|○	85012 or 89413				
		3919944	○|○	85036	89405		...	...
		3919945	–|–	85027	...		...	...
		3919946		...	...	–|○	85033	89427
		3919947	○|○	85013 or 89414				
		3919948		...	...	–|○	85311	89424
		3919949		...	...	–|–	85310	89423
		3919950	○|○	83219				
		3919951	○|○	83309	...		...	...
		3919952	○|○	85736				
		3919953		...	...	–|○	85319	89428
		3919954		...	...	○|○	85003	89411
		3919955	○|○	85300 or 89419				
		3919956	○|○	85036	89405		...	...
		3919957	○|○	83122 or 89406				
		3919959		...	...	○|○	85000	89436
		3919960		...	...	○|○	85322	...
		3919961	○|○	85302 or 89420				
		3919962	○|○	85700				
		3919964	○|○	85304				
		3919965	○|○	85702				
		3919966	○|○	85736				
		3919967	○|○	85302 or 89420				
		3919968	○|○	85736				
		3919972	○|○	85320	89429		...	...
		3919973		...	...	○|○	85956	...
		3919974	○|○	85712				
		3919975	○|○	85700				
		3919976		...	...	–|○	85033	89427
		3919977		...	...	–|○	85033	89427
		3919978	○|○	85702				
		3919979	○|○	85702				
		3919980	○|○	85702				
		3919983		...	...	○|○	85704	...
		3919984	○|○	85700				
		3919985		85723				
		3919988		...	...	–|○	85311	89424
		3919989	–|–	85709				
		3919990		...	...	○|○	85003	89411
		3919991	–|–	85708				
		3919992		85733				
		3919993	○|○	85712				
		3919994		...	...	–|–	85310	89423
		3945808	○|○	89407				
		3945809	○|○	89410				
		3945810	○|○	89420				
		3945811	○|○	89409				
		3945812	–|–	89423				
		3945813	–|○	89428				
		3945814	–|○	89424				
		3945815	○|○	89406				

VOLVO (CONT'D)

Year Ano Année	Model Modelo Modle	OEM #		Front			Rear	
				Fleetline	GasSLX		Fleetline	GasSLX
	Additional O.E.M. Interchanges	3945816		...	...	O|O	89430	...
		3945817	O|O	89422				
		3945818	O|O	89415				
		3945819	O|O	89411				
		3945820	O|O	89413				
		3945821	O|O	89419				
		3946217	O|O	83125				
		3946219		...	...	–|–	83400	...
		3953643	O|O	85040	...		...	...
		4940640	O|O	83216				
		5322338	O|O	83214				
		5513989	O|O	83216				
		5531435	O|O	85307				
		5531436	O|O	85307				
		5531437	O|O	85307				
		5534430	O|O	85303 or 89422				
		5534447	O|O	85303 or 89422				
		5549899	O|O	83207 or 89407				
		5549925	O|O	85304	...		...	...
		6771501	O|O	85040	...		...	...
		6775411	O|O	85040	...		...	...
		19501669		...	...	O|O	85339	...
		19502711	O|O	85702				
		19506846		...	...	O|O	85339	...
		20707753	O|O	85030 or 89440				
		20863239		85080	...		...	...
		25624698	–|–	83041				
		25625008		83019				
		031106460	O|O	85005	89430		...	...
		66221140I	O|O	83215				
		83176191		83019				
		83176192	–|–	83041				
		83176193		83045				
		83176194	O|O	83048				
		83176195	–|–	83103				
		83176196		83110				
		83176197		83111				
		83176198		...	...		83112	...
		83176199		...	...	O|O	83123	89405
		83176200	O|O	83124 or 89407				
		83176201	O|O	83125				
		83176202	O|O	83126 or 89430				
		83176203	O|O	83127				
		83176204		...	...	O|O	83128	89436
		83176205	–|–	83136	...		...	...
		83176206	O|O	83148	...		...	...
		83176207	O|O	83203 or 89436				
		83176208	O|O	83209 or 89414				
		83176209	O|O	83215				
		83176210	O|O	83216				
		83176211		...	...	O|O	85000	89436
		83176212	O|O	85001 or 89410				
		83176213		...	...	O|O	85003	89411
		83176214	O|O	85005 or 89430				
		83176215	O|O	85023 or 89415				

VOLVO (CONT'D)

Year Ano Année	Model Modelo Modle	OEM #		Front			Rear	
				Fleetline	GasSLX		Fleetline	GasSLX
	Additional O.E.M. Interchanges	83176216		**85026**	...		...	...
		83176217		...	...	−|○	**85033**	**89427**
		83176218	○|○	**85036**	**89405**		...	...
		83176219		...	...	○|○	**85045**	...
		83176220		...	...	○|○	**85046**	**89434**
		83176221	○|○	**85047**	**89435**		...	...
		83176222		...	...	○|○	**85052**	...
		83176223	○|○	**85061**	**89450**		...	...
		83176224	○|○	**85062**	**89408**		...	...
		83176225		...	...	○|○	**85066**	**89448**
		83176226		...	...	○|○	**85067**	**89451**
		83176227		...	...	−|−	**85069**	**89455**
		83176228	○|○	**85070**	**89459**		...	...
		83176229	○|○	**85303 or 89422**				
		83176230		...	...	−|−	**85310**	**89423**
		83176231		...	...	−|○	**85311**	**89424**
		83176232	○|○	**85320**	**89429**		...	...
		83176233		...	...	○|○	**85321**	...
		83176234		...	...	○|○	**85323**	**89436**
		83176235		...	...	○|○	**85724**	**89443**
		83176236		...	...	−|−	**85900**	...
		83176237		...	...	○|○	**85916**	**89430**
		83176238	○|○	**85918**	**89449**		...	...
		83176239	○|○	**85933**	**89454**		...	...
		83176240	○|○	**646155**				
		85104186	○|○	**85006**				
		85105667		...	...	○|○	**83128**	**89436**
		85106580	○|○	**85918**	**89449**		...	...
		85137234	○|○	**83125**				
		85137420		...	...	○|○	**85000**	**89436**
		359010003	○|○	**85301**				
		359010004		...	...	○|○	**83219**	...
		359010011		...	...	○|○	**83123**	**89405**
		359010017	○|○	**83314**	...		...	...
		359010022		...	...		**83635**	...
		359013406	○|○	**85305**				
		359013409	○|○	**85304**				
		359013410	○|○	**85307**				
		359013413	○|○	**85006**				
		359013420	○|○	**85303 or 89422**				
		373010001	○|○	**85013 or 89414**				
		373010018	○|○	**85005 or 89430**				
		471700014316	○|○	**85061**	**89450**		...	...
		RC SA3041	−|−	**83041**				
		RC SA3045		**83045**				
		RC SA3048	○|○	**83048**				
		RC SA3103	−|−	**83103**				
		RC SA3111		**83111**				
		RC SA3112		...	...		**83112**	...
		RC SA3124	○|○	**83124 or 89407**				
		RC SA3125	○|○	**83125**				
		RC SA3127	○|○	**83127**				
		RC SA3128		...	...	○|○	**83128**	**89436**
		RC SA3136	−|−	**83136**	...		...	...
		RC SA3148	○|○	**83148**	...		...	...

VOLVO (CONT'D)

Year Ano Année	Model Modelo Modle	OEM #		Front			Rear	
				Fleetline	GasSLX		Fleetline	GasSLX
	Additional O.E.M. Interchanges	RC SA3203	O|O	83203 or 89436				
		RC SA3216	O|O	83216				
		RC SA5000		...	...	O|O	85000	89436
		RC SA5001	O|O	85001 or 89410				
		RC SA5003		...	...	O|O	85003	89411
		RC SA5005	O|O	85005 or 89430				
		RC SA5047	O|O	85047	89435		...	...
		RC SA5052		...	...	O|O	85052	...
		RC SA5061	O|O	85061	89450		...	...
		RC SA5062	O|O	85062	89408		...	...
		RC SA5066		...	...	O|O	85066	89448
		RC SA5067		...	...	O|O	85067	89451
		RC SA5070	O|O	85070	89459		...	...
		RC SA5310		...	...	–|–	85310	89423
		RC SA5320	O|O	85320	89429		...	...
		RC SA5724		...	...	O|O	85724	89443
		RC SA5900		...	...	–|–	85900	...
		RC SA5918	O|O	85918	89449		...	...
		RC SA5933	O|O	85933	89454		...	...
		RC SA6155	O|O	646155				
		SA3019		83019				
		SA3041	–|–	83041				
		SA3045		83045				
		SA3048	O|O	83048				
		SA3103	–|–	83103				
		SA3110		83110				
		SA3111		83111				
		SA3112		...	...		83112	...
		SA3123		...	...	O|O	83123	89405
		SA3124	O|O	83124 or 89407				
		SA3125	O|O	83125				
		SA3126	O|O	83126 or 89430				
		SA3127	O|O	83127				
		SA3128		...	...	O|O	83128	89436
		SA3136	–|–	83136	...		...	...
		SA3148	O|O	83148	...		...	...
		SA5000	O|O	85000 or 89436				
		SA5001	O|O	85001 or 89410				
		SA5003		...	...	O|O	85003	89411
		SA5005	O|O	85005 or 89430				
		SA5023	O|O	85023 or 89415				
		SA5026		85026	...		...	...
		SA5033		...	...	–|O	85033	89427
		SA5036	O|O	85036	89405		...	...
		SA5045		...	...	O|O	85045	...
		SA5046		...	...	O|O	85046	89434
		SA5047	O|O	85047	89435		...	...
		SA5052		...	...	O|O	85052	...
		SA5061	O|O	85061	89450		...	...
		SA5062	O|O	85062	89408		...	...
		SA5066		...	...	O|O	85066	89448
		SA5067		...	...	O|O	85067	89451
		SA5069		...	...	–|–	85069	89455
		SA5070	O|O	85070	89459		...	...
		SA5303	O|O	85303 or 89422				

APPLICATION GUIDE - TRUCKS, TRAILERS AND BUSES

Year Ano Année	Model Modelo Modle	OEM #		Front			Rear	
				Fleetline	GasSLX		Fleetline	GasSLX
VOLVO (CONT'D)								
	Additional O.E.M. Interchanges	SA5310		...	...	−|−	**85310**	**89423**
		SA5311		...	...	−|o	**85311**	**89424**
		SA5320	o|o	**85320**	**89429**		...	...
		SA5321	o|o	**85321**	...		...	...
		SA5323		...	...	o|o	**85323**	**89436**
		SA5724		...	...	o|o	**85724**	**89443**
		SA5900		...	...	−|−	**85900**	...
		SA5916		...	...	o|o	**85916**	**89430**
		SA5918	o|o	**85918**	**89449**		...	...
		SA5933	o|o	**85933**	**89454**		...	...
		SA6155	o|o	**646155**				
	Aero Models (WCA & WIA Models)	66010-0007	o|o	**83004**				
		66010-0008	o|o	**83004**				
		8162662	o|o	**83004**				
		660100007	o|o	**83004**				
		660100008	o|o	**83004**				
	Link Cabmate Model WRC-2P	1202-0032	o|o	**83016**				
		12020032	o|o	**83016**				
	Models with O.E.M. Number	35901-0001		...	...	o|o	**83209**	**89414**
		35901-0008		...	...	o|o	**85060**	...
		37301-0008	−|−	**83400**	...		...	...
		70042	o|o	**85302**	**89420**		...	...
		635869	o|o	**83004**				
		665410	−|−	**85027**	...		...	...
		665539		**85026**	...		...	...
		665739		...	...	o|o	**85047**	**89435**
		2562558		...	...	o|o	**85060**	...
		3092842	o|o	**85061**	**89450**		...	...
		3919958		...	...	o|o	**85046**	**89434**
		3945815		...	...	o|o	**89406**	...
		3945842	o|o	**83009**				
		3946239		...	...	o|o	**85724**	**89443**
		3949240		...	...	o|o	**85047**	**89435**
		3949241	o|o	**85061**	**89450**		...	...
		3972662		...	...	o|o	**85976**	...
		8075287		...	...		**85065**	...
		8168617	o|o	**83030**				
		8174749		...	...	o|o	**85906**	**89407**
		20874147		**83050**				
		25624730	o|o	**85005**	**89430**		...	...
		85104221		...	...	o|o	**85066**	**89448**
		85107095	o|o	**83009**				
		85107238		...	...	o|o	**85976**	...
		85134402	o|o	**85061**	**89450**		...	...
		359010001		...	...	o|o	**83209**	**89414**
		359010008		...	...	o|o	**85060**	...
		373010008	−|−	**83400**	...		...	...
		141700000373	o|o	**85061**	**89450**		...	...
	WG Conventional Tractors with 112" cabs with Link Cabmate Model WWG112-A	1201-0012	o|o	**83023**				
		1202-0012	o|o	**83023**				
		12010012	o|o	**83023**				
		12020012	o|o	**83023**				
N SERIES								
	N10 with 5.5 Ton Front Axle	1593843	o|o	**83215**	...		...	...

VOLVO (CONT'D)

N SERIES (cont'd)

Year Ano Année	Model Modelo Modle	OEM #		Front Fleetline	Front GasSLX		Rear Fleetline	Rear GasSLX
	N11 Models	1593843	○|○	83215	...		...	...
	N12 Models	1593843	○|○	83215	...		...	...

VAH SERIES

11-16	VAH 430 Models with Hendrickson HAS 400 or 460 Series Rear Suspension	60675-001		...	...	○|○	85978	...
		60675-001L		...	...	○|○	85978	...
		8083872		...	...	○|○	85978	...
		60675001		...	...	○|○	85978	...
		60675001L		...	...	○|○	85978	...
17-18	VAH 630 Models with 40,000 lb Rear Air Suspension	21462378		...	...	○|○	85088	...
		21462380		...	...	○|○	85088	...
		471700006038		...	...	○|○	85088	...
		471700006040		...	...	○|○	85088	...
2014	VAH 430 Models with O.E.M. Number	21436086	○|○	85098	89502		...	...
		141700005838	○|○	85098	89502		...	...
	VAH 430 Models with 12,000 to 22,000 lb Front Axles	20433426		85081	...		...	...
		SDA471700131258		85081	...		...	...

VN

	VN Models - Vertical Position (w/O.E.M. Number)	20496215	○|○	83048				
		20704334	○|○	83048				
		20721254	○|○	83048				
		21368413	○|○	83048				
		22662125	○|○	83048				

VNL 300

06-10	Models with 12,000 - 13,200 lb Front Axles	20433424	○|○	85061	89450		...	...
		20973993	○|○	85061	89450		...	...
06-11	Models with 40,000 lb Rear Air Suspension	20433425		...	...	○|○	85066	89448
		20551628		...	...	○|○	85066	89448
		471700000443		...	...	○|○	85066	89448
		471700002627		...	...	○|○	85066	89448
06-14	Models with Hendrickson Airtek	64838-003	○|○	85933	89454		...	...
		64838-003L	○|○	85933	89454		...	...
		20485632	○|○	85933	89454		...	...
		20485633	○|○	85933	89454		...	...
		21137330	○|○	85933	89454		...	...
		64838003	○|○	85933	89454		...	...
		64838003L	○|○	85933	89454		...	...
		471700003832	○|○	85933	89454		...	...
11-15	Models with Mid-Roof Sleeper Cabs	20704334	○|○	83048				
		22662125	○|○	83048				
		22866844	○|○	83048				
21-23	DayCab Models with O.E.M. Number	21368411	○|○	83905				
		22662230	○|○	83905				
21-23	Models with 12,000 - 13,200 lb Front Axles	23288402	○|○	85061	89450		...	...
21-23	Models with 40,000 lb Rear Air Suspension	23159761		...	...	○|○	85188	...
2021	Models with 40,000 lb Rear Air Suspension	23159763		...	...	○|○	85188	...
		471700014318		...	...	○|○	85188	...

VNL 430

06-10	Models with 12,000 - 13,200 lb Front Axles	20433424	○|○	85061	89450		...	...
		20973993	○|○	85061	89450		...	...
05-11	Models with 40,000 lb Rear Air Suspension	20433425		...	...	○|○	85066	89448

Year Ano Année	Model Modelo Modle	OEM #		Front			Rear	
				Fleetline	GasSLX		Fleetline	GasSLX
VOLVO (CONT'D)								
VNL 430 (cont'd)								
05-11	Models with 40,000 lb Rear Air Suspension	20551628		...	...	O|O	85066	89448
		471700000443		...	...	O|O	85066	89448
		471700002627		...	...	O|O	85066	89448
05-14	Models with Hendrickson Airtek	64838-003	O|O	85933	89454		...	...
		64838-003L	O|O	85933	89454		...	...
		20485632	O|O	85933	89454		...	...
		20485633	O|O	85933	89454		...	...
		21137330	O|O	85933	89454		...	...
		64838003	O|O	85933	89454		...	...
		64838003L	O|O	85933	89454		...	...
		471700003832	O|O	85933	89454		...	...
13-14	Models with Mid-Roof Sleeper Cabs	21391412	O|O	83048				
11-18	Models with 40,000 lb Rear Air Suspension	21462380		...	...	O|O	85088	...
		471700006040		...	...	O|O	85088	...
VNL 630								
06-10	Models with 12,000 - 13,200 lb Front Axles	20433424	O|O	85061	89450		...	...
		20973993	O|O	85061	89450		...	...
06-11	Models with 40,000 lb Rear Air Suspension	20551628		...	...	O|O	85066	89448
		471700000443		...	...	O|O	85066	89448
06-14	Models with Hendrickson Airtek	64838-003	O|O	85933	89454		...	...
		64838-003L	O|O	85933	89454		...	...
		20485632	O|O	85933	89454		...	...
		20485633	O|O	85933	89454		...	...
		21137330	O|O	85933	89454		...	...
		64838003	O|O	85933	89454		...	...
		64838003L	O|O	85933	89454		...	...
		471700003832	O|O	85933	89454		...	...
13-14	Models with Mid-Roof Sleeper Cabs	21391412	O|O	83048				
17-18	Models with Hendrickson Airtek	64838-003	O|O	85933	89454		...	...
		64838-003L	O|O	85933	89454		...	...
		20485632	O|O	85933	89454		...	...
		20485633	O|O	85933	89454		...	...
		21137330	O|O	85933	89454		...	...
		64838003	O|O	85933	89454		...	...
		64838003L	O|O	85933	89454		...	...
		471700003832	O|O	85933	89454		...	...
11-19	Models with 40,000 lb Rear Air Suspension	21462380		...	...	O|O	85088	...
		471700006040		...	...	O|O	85088	...
VNL 670								
06-10	Models with 12,000 - 13,200 lb Front Axles	20433424	O|O	85061	89450		...	...
		20973993	O|O	85061	89450		...	...
06-11	Models with 40,000 lb Rear Air Suspension	20551628		...	...	O|O	85066	89448
		471700000443		...	...	O|O	85066	89448
06-14	Models with Hendrickson Airtek	64838-003	O|O	85933	89454		...	...
		64838-003L	O|O	85933	89454		...	...
		20485632	O|O	85933	89454		...	...
		20485633	O|O	85933	89454		...	...
		21137330	O|O	85933	89454		...	...
		64838003	O|O	85933	89454		...	...
		64838003L	O|O	85933	89454		...	...
		471700003832	O|O	85933	89454		...	...
13-14	Models with Mid-Roof Sleeper Cabs	21391412	O|O	83048				

VOLVO (CONT'D)

VNL 670 (cont'd)

Year Ano Année	Model Modelo Modle	OEM #		Front Fleetline	Front GasSLX		Rear Fleetline	Rear GasSLX
17-18	Models with Hendrickson Airtek	64838-003	O|O	85933	89454		...	...
		64838-003L	O|O	85933	89454		...	...
		20485632	O|O	85933	89454		...	...
		20485633	O|O	85933	89454		...	...
		21137330	O|O	85933	89454		...	...
		64838003	O|O	85933	89454		...	...
		64838003L	O|O	85933	89454		...	...
		471700003832	O|O	85933	89454		...	...
11-19	Models with 40,000 lb Rear Air Suspension	21462380		...	...	O|O	85088	...
		471700006040		...	...	O|O	85088	...

VNL 740

21-23	Models with 13,200 lb to 14,600 lb Front Axle	23288403	O|O	85061	89450		...	...
		41700014316	O|O	85061	89450		...	...
21-23	Models with 40,000 lb Rear Air Suspension	23159761		...	...	O|O	85188	...
		23159763		...	...	O|O	85188	...
		471700014318		...	...	O|O	85188	...
21-23	Models with Mid-Roof Sleeper Cabs	20704334	O|O	83048				
		22866844	O|O	83048				

VNL 760

21-22	Models with 12,000 - 14,600 lb Front Axles	23288402	O|O	85061	89450		...	...
21-23	Models with 13,200 lb to 14,600 lb Front Axle	23288403	O|O	85061	89450		...	...
		41700014316	O|O	85061	89450		...	...
21-23	Models with 40,000 lb Rear Air Suspension	23159761		...	...	O|O	85188	...
		23159763		...	...	O|O	85188	...
		471700014318		...	...	O|O	85188	...
21-23	Models with Mid-Roof Sleeper Cabs	20704334	O|O	83048				
		22866844	O|O	83048				

VNL 780

11-19	Models with Sleeper Cabs with O.E.M. Number	20721254	O|O	83048				
		21391413	O|O	83048				
		22866844	O|O	83048				

VNL 860

21-22	Models with 12,000 - 14,600 lb Front Axles	23288403	O|O	85061	89450		...	...
21-22	Models with 40,000 lb Rear Air Suspension	23159761		...	...	O|O	85188	...
		23159763		...	...	O|O	85188	...
		471700014318		...	...	O|O	85188	...

VNL SERIES

06-10	730 & 780 Models with 13,200 lb Front Axle	20433424	O|O	85061	89450		...	...
		20973993	O|O	85061	89450		...	...
06-11	730 & 780 Models with 40,000 lb Rear Air Suspension	20551628		...	...	O|O	85066	89448
		471700000443		...	...	O|O	85066	89448
06-16	64T-830 Models with Hendrickson 40,000 lb Pimaax EX and FireMaax EX Air Suspension	20782199		...	...	O|O	85072	...
06-16	64T-830 Models with Hendrickson 40,000 lb Primaax, Pimaax EX and FireMaax EX Air Suspension	60657-007		...	...	O|O	85072	...
		60657007		...	...	O|O	85072	...
06-16	730 & 780 Models with Hendrickson Airtek	64838-003	O|O	85933	89454		...	...
		64838-003L	O|O	85933	89454		...	...
		20485632	O|O	85933	89454		...	...
		20485633	O|O	85933	89454		...	...

Year Ano Année	Model Modelo Modle	OEM #		Front			Rear	
				Fleetline	GasSLX		Fleetline	GasSLX
VOLVO (CONT'D)								
VNL SERIES (cont'd)								
06-16	730 & 780 Models with Hendrickson Airtek	21137330	O|O	**85933**	**89454**		...	...
		64838003	O|O	**85933**	**89454**		...	...
		64838003L	O|O	**85933**	**89454**		...	...
		471700003832	O|O	**85933**	**89454**		...	...
11-18	430 Models with 12,500 - 14,600 lb Front Axle	21436086	O|O	**85098**	**89502**		...	...
		141700005838	O|O	**85098**	**89502**		...	...
11-18	730 & 780 Models with 12,500 - 14,600 lb Front Axle	21436086	O|O	**85098**	**89502**		...	...
		141700005838	O|O	**85098**	**89502**		...	...
11-18	730 & 780 Models with 40,000 lb Rear Air Suspension	21462380		...	...	O|O	**85088**	...
		471700006040		...	...	O|O	**85088**	...
11-19	630 & 670 Models with 12,500 - 14,600 lb Front Axle	21436086	O|O	**85098**	**89502**		...	...
		141700005838	O|O	**85098**	**89502**		...	...
11-20	300, 300U Models with 12,000 - 13,200 lb Front Axles	21436086	O|O	**85098**	**89502**		...	...
		141700005838	O|O	**85098**	**89502**		...	...
VNM								
	All with 60" to 77" Mid - High Roof Sleepers (w/O.E.M. Number)	21391412	O|O	**83048**				
VNM SERIES								
	200 Models with 46,000 lb T-Ride Rear Suspension To 2016	20433427		...	...		**85065**	...
	630 Models with 38,000 lb Rear Air Suspension To 2017	21462378		...	...	O|O	**85088**	...
		21462380		...	...	O|O	**85088**	...
		471700006038		...	...	O|O	**85088**	...
		471700006040		...	...	O|O	**85088**	...
VNR 300								
21-23	Models with 12,000 - 14,600 lb Front Axles	23288402	O|O	**85061**	**89450**		...	...
		23288403	O|O	**85061**	**89450**		...	...
		41700014316	O|O	**85061**	**89450**		...	...
21-23	Models with 40,000 lb Rear Air Suspension	23159761		...	...	O|O	**85188**	...
		23159763		...	...	O|O	**85188**	...
		471700014318		...	...	O|O	**85188**	...
21-23	Models with O.E.M. Number	22662230	O|O	**83905**				
VNR SERIES								
	640 Models with 38,000 lb Rear Air Suspension	21462380		...	...	O|O	**85088**	...
		471700006040		...	...	O|O	**85088**	...
VN SERIES - 2200								
2000	Models built after May 1999 From 5/99	8086651		...	...	O|O	**85066**	**89448**
		20433425		...	...	O|O	**85066**	**89448**
		471700002627		...	...	O|O	**85066**	**89448**
	Models with O.E.M. Number	665607		...	...	O|O	**85047**	**89435**
		8077874		...	...	O|O	**85047**	**89435**
		8077874P01		...	...	O|O	**85047**	**89435**
		8077874-P01		...	...	O|O	**85047**	**89435**
		8078195	O|O	**85061**	**89450**		...	...
		8086053		...	...	O|O	**85047**	**89435**
		8169859		...	...	O|O	**85047**	**89435**
		20433424	O|O	**85061**	**89450**		...	...
		20513881	O|O	**85061**	**89450**		...	...
		20551628		...	...	O|O	**85066**	**89448**
		20973993	O|O	**85061**	**89450**		...	...
		471700000443		...	...	O|O	**85066**	**89448**
	VN Models - Horizontal Position	8078547	O|O	**83029**				

Year Ano Année	Model Modelo Modle	OEM #		Front			Rear	
				Fleetline	GasSLX		Fleetline	GasSLX
VOLVO (CONT'D)								
VN SERIES - 2200 (cont'd)								
	VN Models - Horizontal Position	20496217	○|○	**83029**				
	VN Models - Vertical Position (w/O.E.M. Number)	8078546	○|○	**83028**				
VNX								
2018	VNX 84T-740 Models with High Rise Sleeper Cabs	22866844	○|○	**83048**				
2022	VNX 84T-740 Models with High Rise Sleeper Cabs	22866844	○|○	**83048**				
VNX - SERIES								
	Models with 40,000 lb Rear Air Suspension	21462380		...	...	○|○	**85088**	...
		471700006040		...	...	○|○	**85088**	...
VOCATIONAL TRUCKS								
	Models with T-Ride Rear Suspension	8060026		...	...		**85065**	...
		8073212		...	...		**85065**	...
		8075257		...	...		**85065**	...
		20433427		...	...		**85065**	...
	WX, WXLL, WXR, WG, AC Models	47902-24		...	...	○|○	**83137**	...
		4790224		...	...	○|○	**83137**	...
VT								
2010	All with 60" to 77" Mid - High Roof Sleepers (w/O.E.M. Number)	20721254	○|○	**83048**				
WCA & WIA SERIES								
93-95	Models with O.E.M. Number and after V.I.N. Number 657841	8026658		...	...	○|○	**85046**	**89434**
96-98	All with O.E.M. Number and after V.I.N. Number 723506	8169859		...	...	○|○	**85047**	**89435**
	Models with Front Dual Shocks	02-7005976	–|–	**83400**	...		...	...
		3082284	–|–	**83400**	...		...	...
		027005976	–|–	**83400**	...		...	...
	Models with O.E.M. Number	37301-0016		**85026**	...		...	...
		37301-0021		**85026**	...		...	...
		37301-3201	–|–	**85027**	...		...	...
		37301-3202		**85026**	...		...	...
		4975549	○|○	**83216**	...		...	...
		8065787		**85026**	...		...	...
		373010016		**85026**	...		...	...
		373010021		**85026**	...		...	...
		373013201	–|–	**85027**	...		...	...
		373013202		**85026**	...		...	...
	Models with O.E.M. Number and up to V.I.N. Number 657250 To 1992	8071524		...	...	○|○	**85024**	...
WG SERIES								
93-95	Models with O.E.M. Number	8026658		...	...	○|○	**85046**	**89434**
	Models with O.E.M. Number	35901-3201		...	...	○|○	**85024**	...
		37301-3201	–|–	**85027**	...		...	...
		665623		...	...	○|○	**85046**	**89434**
		359013201		...	...	○|○	**85024**	...
		373013201	–|–	**85027**	...		...	...
	Models with O.E.M. Number To 1992	8065787		**85026**	...		...	...
		8071524		...	...	○|○	**85024**	...
WH SERIES								
93-95	WHS, WHR, WHL or WHE Models with O.E.M. Number	8026658		...	...	○|○	**85046**	**89434**
96-97	WHS, WHR, WHL or WHE Models with O.E.M. Number	8169859		...	...	○|○	**85047**	**89435**
	WHS, WHR, WHL or WHE Models with Front Dual Shocks	02-7005976	–|–	**83400**	...		...	...
		3082284	–|–	**83400**	...		...	...

APPLICATION GUIDE - TRUCKS, TRAILERS AND BUSES

Year Ano Année	Model Modelo Modle	OEM #		Front			Rear	
				Fleetline	GasSLX		Fleetline	GasSLX
VOLVO (CONT'D)								
WH SERIES (cont'd)								
	WHS, WHR, WHL or WHE Models with Front Dual Shocks	027005976	−|−	**83400**	...		...	...
	WHS, WHR, WHL or WHE Models with Front Single Shocks	37301-0021		**85026**	...		...	...
		373010021		**85026**	...		...	...
	WHS, WHR, WHL or WHE Models with O.E.M. Number To 1992	35901-3201		...	...	O|O	**85024**	...
		8071524		...	...	O|O	**85024**	...
		359013201		...	...	O|O	**85024**	...
WXLL								
96-03	Models with Hendrickson HN - 402 or HN - 462 Rear Suspension	57241-3		...	...		**83112**	...
		60680-003		...	...		**83112**	...
		60680-003L		...	...		**83112**	...
		572413		...	...		**83112**	...
		60680003		...	...		**83112**	...
		60680003L		...	...		**83112**	...
WXR								
96-03	Models with Hendrickson HN - 402 or HN - 462 Rear Suspension	57241-3		...	...		**83112**	...
		60680-003		...	...		**83112**	...
		60680-003L		...	...		**83112**	...
		572413		...	...		**83112**	...
		60680003		...	...		**83112**	...
		60680003L		...	...		**83112**	...
WABASH NATIONAL								
97-21	RHP11, RHP55 and RideSentry Trailer Suspension	202447		...	...	O|O	**85919**	...
		203447		...	...	O|O	**85919**	...
	Trailers with Aurora part number	DANSR1VJ100		...	...	O|O	**85078**	...
		FLL83203-07I		...	...	O|O	**83203**	**89436**
		FLL83207-07I		...	...	O|O	**83207**	**89407**
		FLL85000-07I		...	...	O|O	**85000**	**89436**
		FLL85030-07I		...	...	O|O	**85030**	**89440**
		FLL8320307I		...	...	O|O	**83203**	**89436**
		FLL8320707I		...	...	O|O	**83207**	**89407**
		FLL8500007I		...	...	O|O	**85000**	**89436**
		FLL8503007I		...	...	O|O	**85030**	**89440**
		FRUUCE1295-1		...	...	O|O	**85300**	**89419**
		FRUUCE1295-901		...	...	O|O	**85300**	**89419**
		FRUUCE2983-1		...	...	O|O	**85322**	...
		FRUUCE12951		...	...	O|O	**85300**	**89419**
		FRUUCE29831		...	...	O|O	**85322**	...
		FRUUCE1295901		...	...	O|O	**85300**	**89419**
		FRUUCF8339-1		...	...	O|O	**85321**	...
		FRUUCF83391		...	...	O|O	**85321**	...
		HENS20001		...	...	O|O	**83389**	**89436**
		HENS20002		...	...	O|O	**85000**	**89436**
		HENS20126		...	...	O|O	**85323**	**89436**
		HENS21292		...	...	O|O	**85052**	...
		HENS23566		...	...	O|O	**85000**	**89436**
		HENS24088		...	...	O|O	**83389**	**89436**
		HENS24088		...	...	O|O	**85000**	**89436**
		HENS-20001		...	...	O|O	**83389**	**89436**
		HENS-20002		...	...	O|O	**85000**	**89436**
		HENS-20126		...	...	O|O	**85323**	**89436**
		HENS-21292		...	...	O|O	**85052**	...

Year Ano Année	Model Modelo Modle	OEM #		Front			Rear	
				Fleetline	GasSLX		Fleetline	GasSLX
WABASH NATIONAL (CONT'D)								
	Trailers with Aurora part number	HENS-23566		...	...	○|○	85000	89436
		HENS-24088		...	...	○|○	83389	89436
		HENS-24088		...	...	○|○	85000	89436
		NEW900-44-089		...	...	○|○	83124	89407
		NEW900-44-162		...	...	○|○	83128	89436
		NEW900-44-625		...	...	○|○	83125	...
		NEW900-44-626		...	...	○|○	83126	89430
		NEW900-44-642		...	...	○|○	83127	...
		NEW900-44-794		...	...	○|○	83127	...
		NEW900-44-868		...	...	○|○	85045	...
		NEW900-44-978		...	...	○|○	85059	...
		NEW900-44-979		...	...	○|○	83113	...
		NEW900-45-040		...	...	○|○	83130	...
		NEW900-45-054		...	...	○|○	85051	...
		NEW900-45-298		...	...	○|○	83128	89436
		NEW900-45-299		...	...	○|○	85000	89436
		NEW90044089		...	...	○|○	83124	89407
		NEW90044162		...	...	○|○	83128	89436
		NEW90044625		...	...	○|○	83125	...
		NEW90044626		...	...	○|○	83126	89430
		NEW90044642		...	...	○|○	83127	...
		NEW90044794		...	...	○|○	83127	...
		NEW90044868		...	...	○|○	85045	...
		NEW90044978		...	...	○|○	85059	...
		NEW90044979		...	...	○|○	83113	...
		NEW90045040		...	...	○|○	83130	...
		NEW90045054		...	...	○|○	85051	...
		NEW90045298		...	...	○|○	83363	...
		NEW90045299		...	...	○|○	85000	89436
WATSON & CHALIN MFG. INC.								
HEAVY DUTY TRAILER AIR SUSPENSION								
	TA-550-17	10148		...	...	○|○	83204	...
	TA-2590-14, 17 HD	10148		...	...	○|○	83204	...
	TA-3090-14, -17, -19	10148		...	...	○|○	83204	...
LIGHT WEIGHT TRAILER AIR SUSPENSION								
	TA-751-16	10148		...	...	○|○	83204	...
	TA-3175-9	17079		...	...	○|○	85300	89419
LW5L-1100 SR								
	Self - Steering Axle Suspension Systems	11418	○|○	646155				
LWSL-1100-SR SELF STEER AXLE SUSPENSION								
	AL-1100-SR Models	10148		...	...	○|○	83204	...
	HL-1100-20	10148		...	...	○|○	83204	...
	HL-1100-20 FL	10147		...	...	○|○	83203	89436
	SL-1100-LR	12128		...	...	○|○	85005	89430
	Models with O.E.M. Number	10147HD		...	...	○|○	85000	89436
		17069	○|○	632147				
		17186		...	...	○|○	85323	89436
		17186-01		...	...	○|○	85323	89436
		17218		...	...	○|○	85029	...
		17297		...	...	○|○	85064	...
		17306		...	...	○|○	85938	...

Year Ano Année	Model Modelo Modle	OEM #		Front			Rear	
				Fleetline	GasSLX		Fleetline	GasSLX
WATSON & CHALIN MFG. INC. (CONT'D)								
	Models with O.E.M. Number	17317		...	...	O|O	85344	...
		17382		...	...	O|O	85014	...
		17430		...	...	O|O	85321	...
		17474		...	...	–|O	85009	...
		19036		...	...	O|O	85934	...
		19249		...	...	O|O	85939	...
		19250		...	...	O|O	85382	...
		19603		...	...	O|O	85939	...
		665724		...	...	O|O	85000	89436
		665728		...	...	O|O	85060	...
		665770		...	...	O|O	85064	...
		665862		...	...	O|O	85000	89436
		680547		...	...	O|O	85323	89436
		680584		...	...	O|O	85938	...
		680714		...	...	O|O	85934	...
		727603		...	...	O|O	83203	89436
		727604		...	...	O|O	83204	...
		1718601		...	...	O|O	85323	89436
		A20345		...	...	O|O	85345	...
		A-20345		...	...	O|O	85345	...
		B23649		...	...	O|O	85064	...
		B23650		...	...	O|O	85052	...
		B23651		...	...	O|O	85045	...
		B23743		...	...	O|O	85938	...
		B-23649		...	...	O|O	85064	...
		B-23650		...	...	O|O	85052	...
		B-23651		...	...	O|O	85045	...
		B-23743		...	...	O|O	85938	...
	Self-Steering Axle Shocks	53000070-001	O|O	646177				
SL-2089 STEERABLE LIFT AXLE SUSPENSION								
	Self - Steering Axle Suspension Systems	11418	O|O	646155				
TRAILER AIR SUSPENSION								
	TA-2590-12-1	10147		...	...	O|O	83203	89436
	TA-2590-12, 14, 15, & 17,	12128		...	...	O|O	85005	89430
WCAL-1000 SST								
	Self - Steering Axle Suspension Systems	11418	O|O	646155				
WCAL-1100 LR								
	Self - Steering Axle Suspension Systems	11418	O|O	646155				
WCAL-1100 SR								
	Self - Steering Axle Suspension Systems	11418	O|O	646155				
WCAL-1100 SRLP								
	Self - Steering Axle Suspension Systems	11418	O|O	646155				
WCAL-1100 SSR								
	Self - Steering Axle Suspension Systems	11418	O|O	646155				
WCAL-2200 SERIES PUSHER OR TAG AXLE ASSEMBLY								
	AL-2200 Models	10148		...	...	O|O	83204	...
WCHL-1100 FL								
	Self - Steering Axle Suspension Systems	11418	O|O	646155				

Year Ano Année	Model Modelo Modle	OEM #		Front			Rear	
				Fleetline	GasSLX		Fleetline	GasSLX
WATSON & CHALIN MFG. INC. (CONT'D)								
WCHL-1100 HI-LIFT								
	Self - Steering Axle Suspension Systems	11418	○|○	**646155**				
WCTA-1200 SERIES TRAILER AIR SUSPENSION								
	TA-1000	10634		...	...	○|○	**G63357**	...
	TA-1200-5	10147		...	...	○|○	**83203**	89436
WCTA SERIES DUMP TRAILER AIR SUSPENSION								
	TA-525, -DB	10147		...	...	○|○	**83203**	89436
	TA-1600-21	11604		...	...	○|○	**83125**	...
	TA-1900-15	10147		...	...	○|○	**83203**	89436
	TA-1900-16, -17	10148		...	...	○|○	**83204**	...
	TA-1900-18, -19	12128		...	...	○|○	**85005**	89430
	TA-5000-DB-19, -F-19	12128		...	...	○|○	**85005**	89430
	TA-5000-DB-24, -DB-30, -F-24, -F-30,	11724		...	...	○|○	**83123**	89405
WCTA SERIES TRAILER AIR SUSPENSION								
	TA-250-6, 7.5, 9,	10147		...	...	○|○	**83203**	89436
	TA-250-12	10148		...	...	○|○	**83204**	...
	TA-251-6.5, -6.5FS,	10147		...	...	○|○	**83203**	89436
	TA-251-7.5, -7.5FS	10147		...	...	○|○	**83203**	89436
	TA-251-8FS	10147		...	...	○|○	**83203**	89436
	TA-251-9.0, -9.0FS, -10,	10147		...	...	○|○	**83203**	89436
	TA-251-12, -12FS,	10148		...	...	○|○	**83204**	...
	TA-255-9	10147		...	...	○|○	**83203**	89436
	TA-280-6.5, 7.5, -9.0,	11604		...	...	○|○	**83125**	...
	TA-300-9	10147		...	...	○|○	**83203**	89436
	TA-380-9	12128		...	...	○|○	**85005**	89430
	TA-2075-6	10148		...	...	○|○	**83204**	...
	TA-2075-9	12128		...	...	○|○	**85005**	89430
WCTL-2200 SERIES TRAILER AIR LIFT								
89-21	TL-2590-12,14,15, & 17 From 10/89	12128		...	...	○|○	**85005**	89430
	TL-1600-21	11604		...	...	○|○	**83125**	...
WCWB SERIES TRAILER AIR SUSPENSION								
	Models with O.E.M. Number	17300		...	...	○|○	**85052**	...
		665727		...	...	○|○	**85005**	89430
		665769		...	...	○|○	**85052**	...
		3946219		...	...	–|–	**83400**	...
	WB-251-6.5, 7.5, 9	10147		...	...	○|○	**83203**	89436
	WB-280-9	11604		...	...	○|○	**83125**	...
	WB-2500-6	10148		...	...	○|○	**83204**	...
	WB-2500-7.5, -9,	12128		...	...	○|○	**85005**	89430
WESTERN STAR								
4700SB								
12-20	Models with 20000 lb Set -Back Front Axle	10-13809-000	○|○	**85958**	...		...	...
		1013809000	○|○	**85958**	...		...	...
		471700003920	○|○	**85958**	...		...	...
12-22	Models with FAS II (40,000 lb) Rear Air Suspension	16-15817-000		...	...	○|○	**85724**	89443
		16-18708-000		...	...	○|○	**85724**	89443
		680611		...	...	○|○	**85724**	89443
		1615817000		...	...	○|○	**85724**	89443
		1618708000		...	...	○|○	**85724**	89443

WESTERN STAR (CONT'D)

4700SB (cont'd)

Year Ano Année	Model Modelo Modle	OEM #	Front Fleetline	Front GasSLX		Rear Fleetline	Rear GasSLX
12-22	Models with FAS II (40,000 lb) Rear Air Suspension	471700002809	...	...	O|O	85724	89443
		481700006848	...	...	O|O	85724	89443
		SDA471700002809	...	...	O|O	85724	89443
12-22	Models with Hendrickson HN - 462	60680-003	...	...		83112	...
		60680-003L	...	...		83112	...
		60680003	...	...		83112	...
		60680003L	...	...		83112	...
12-22	Models with Hendrickson Primaax EX 462 Air Suspensions with 8 1/2" to 10" Ride Height	60657-003	...	...	O|O	85072	...
		60657-003L	...	...	O|O	85072	...
		60657003	...	...	O|O	85072	...
		60657003L	...	...	O|O	85072	...
12-22	Models with Reyco 102 or 79KB Suspension (Drive Axle)	16725-01	...	...	O|O	83126	89430
		19495-01	...	...	O|O	83126	89430
		1672501	...	...	O|O	83126	89430
		1949501	...	...	O|O	83126	89430
12-23	Models with Freightliner TufTrac Rear Air Suspension	16-15770-000	...	...	O|O	85956	...
		1615770000	...	...	O|O	85956	...
		481700125969	...	...	O|O	85956	...
		SDA481700125969	...	...	O|O	85956	...

4700SF

Year Ano Année	Model Modelo Modle	OEM #	Front Fleetline	Front GasSLX		Rear Fleetline	Rear GasSLX
12-22	Models with FAS II (40,000 lb) Rear Air Suspension	16-15817-000	...	...	O|O	85724	89443
		16-18708-000	...	...	O|O	85724	89443
		680611	...	...	O|O	85724	89443
		1615817000	...	...	O|O	85724	89443
		1618708000	...	...	O|O	85724	89443
		471700002809	...	...	O|O	85724	89443
		481700006848	...	...	O|O	85724	89443
		SDA471700002809	...	...	O|O	85724	89443
12-22	Models with Hendrickson HN - 462	60680-003	...	...		83112	...
		60680-003L	...	...		83112	...
		60680003	...	...		83112	...
		60680003L	...	...		83112	...
12-22	Models with Hendrickson Primaax EX 462 Air Suspensions with 8 1/2" to 10" Ride Height	60657-003	...	...	O|O	85072	...
		60657-003L	...	...	O|O	85072	...
		60657003	...	...	O|O	85072	...
		60657003L	...	...	O|O	85072	...
12-22	Models with Reyco 102 or 79KB Suspension (Drive Axle)	16725-01	...	...	O|O	83126	89430
		19495-01	...	...	O|O	83126	89430
		1672501	...	...	O|O	83126	89430
		1949501	...	...	O|O	83126	89430
12-23	Models with Freightliner TufTrac Rear Air Suspension	16-15770-000	...	...	O|O	85956	...
		1615770000	...	...	O|O	85956	...
		481700125969	...	...	O|O	85956	...
		SDA481700125969	...	...	O|O	85956	...

4800

Year Ano Année	Model Modelo Modle	OEM #		Front Fleetline	Front GasSLX		Rear Fleetline	Rear GasSLX
00-02	Models with Hendrickson Front Airtek	58913-003	O|O	85932	89453		...	...
		58913-003L	O|O	85932	89453		...	...
		58913-012	O|O	85932	89453		...	...
		58913-012L	O|O	85932	89453		...	...
		58913003	O|O	85932	89453		...	...
		58913003L	O|O	85932	89453		...	...

WESTERN STAR (CONT'D)

4800 (cont'd)

Year Ano Année	Model Modelo Modle	OEM #		Front Fleetline	Front GasSLX		Rear Fleetline	Rear GasSLX
00-02	Models with Hendrickson Front Airtek	58913012	○|○	85932	89453		...	...
		58913012L	○|○	85932	89453		...	...
		471700006269	○|○	85932	89453		...	...
		471700131331	○|○	85932	89453		...	...
81-02	Models with O.E.M. Number	66010-3402	○|○	83022				
		66010-3403	○|○	83022				
		660103402	○|○	83022				
		660103403	○|○	83022				

4800SB

12-20	Models with 12000 lb Taperleaf Front Suspension	10-13809-000	○|○	85958	...		...	...
		1013809000	○|○	85958	...		...	...
		471700003920	○|○	85958	...		...	...
12-22	Models with Freightliner TufTrac Rear Air Suspension	16-15770-000		...	...	○|○	85956	...
		1615770000		...	...	○|○	85956	...
		481700125969		...	...	○|○	85956	...
		SDA481700125969		...	...	○|○	85956	...
12-22	Models with Hendrickson Front Airtek	58913-003	○|○	85932	89453		...	...
		58913-003L	○|○	85932	89453		...	...
		58913-012	○|○	85932	89453		...	...
		58913-012L	○|○	85932	89453		...	...
		58913003	○|○	85932	89453		...	...
		58913003L	○|○	85932	89453		...	...
		58913012	○|○	85932	89453		...	...
		58913012L	○|○	85932	89453		...	...
		471700006269	○|○	85932	89453		...	...
		471700131331	○|○	85932	89453		...	...

4800SF

13-20	Models with 12000 lb Taperleaf Front Suspension	10-13809-000	○|○	85958	...		...	...
		1013809000	○|○	85958	...		...	...
		471700003920	○|○	85958	...		...	...
13-22	Models with Freightliner TufTrac Rear Air Suspension	16-15770-000		...	...	○|○	85956	...
		1615770000		...	...	○|○	85956	...
		481700125969		...	...	○|○	85956	...
		SDA481700125969		...	...	○|○	85956	...
13-22	Models with Hendrickson Front Airtek	58913-003	○|○	85932	89453		...	...
		58913-003L	○|○	85932	89453		...	...
		58913-012	○|○	85932	89453		...	...
		58913-012L	○|○	85932	89453		...	...
		58913003	○|○	85932	89453		...	...
		58913003L	○|○	85932	89453		...	...
		58913012	○|○	85932	89453		...	...
		58913012L	○|○	85932	89453		...	...
		471700006269	○|○	85932	89453		...	...
		471700131331	○|○	85932	89453		...	...

4900

01-02	Models with Hendrickson HMX 400/460 Haulmax with 16.5" Saddle	60680-004		...	...		83143	...
		60680-004L		...	...		83143	...
		60680004		...	...		83143	...
		60680004L		...	...		83143	...
01-02	Models with Hendrickson HMX 400/460 Haulmax with 17.5" & 18.5" Saddle	60680-005		...	...		83142	...
		60680-005L		...	...		83142	...

Year Ano Année	Model Modelo Modle	OEM #		Front			Rear	
				Fleetline	GasSLX		Fleetline	GasSLX
WESTERN STAR (CONT'D)								
4900 (cont'd)								
01-02	Models with Hendrickson HMX 400/460 Haulmax with 17.5" & 18.5" Saddle	60680005		...	...		83142	...
		60680005L		...	...		83142	...
81-02	Models with O.E.M. Number	66010-3402	O|O	83022				
		66010-3403	O|O	83022				
		660103402	O|O	83022				
		660103403	O|O	83022				
97-02	Day Cab Models	18-60772-000	O|O	83026				
		1860772000	O|O	83026				
4900E								
00-02	Models with Hendrickson Front Airtek	58913-003	O|O	85932	89453		...	...
		58913-003L	O|O	85932	89453		...	...
		58913-012	O|O	85932	89453		...	...
		58913-012L	O|O	85932	89453		...	...
		58913003	O|O	85932	89453		...	...
		58913003L	O|O	85932	89453		...	...
		58913012	O|O	85932	89453		...	...
		58913012L	O|O	85932	89453		...	...
		471700006269	O|O	85932	89453		...	...
		471700131331	O|O	85932	89453		...	...
01-02	Models with Hendrickson HMX 400/460 Haulmax with 16.5" Saddle	60680-004		...	...		83143	...
		60680-004L		...	...		83143	...
		60680004		...	...		83143	...
		60680004L		...	...		83143	...
01-02	Models with Hendrickson HMX 400/460 Haulmax with 17.5" & 18.5" Saddle	60680-005		...	...		83142	...
		60680-005L		...	...		83142	...
		60680005		...	...		83142	...
		60680005L		...	...		83142	...
97-02	Day Cab Models	18-60772-000	O|O	83026				
		1860772000	O|O	83026				
97-02	Models with O.E.M. Number	66010-3402	O|O	83022				
		66010-3403	O|O	83022				
		660103402	O|O	83022				
		660103403	O|O	83022				
4900EX								
08-20	Models with 12000 lb Taperleaf Front Suspension	10-13809-000	O|O	85958	...		...	...
		1013809000	O|O	85958	...		...	...
		471700003920	O|O	85958	...		...	...
02-22	Models with Hendrickson Front Airtek	58913-003	O|O	85932	89453		...	...
		58913-003L	O|O	85932	89453		...	...
		58913-012	O|O	85932	89453		...	...
		58913-012L	O|O	85932	89453		...	...
		58913003	O|O	85932	89453		...	...
		58913003L	O|O	85932	89453		...	...
		58913012	O|O	85932	89453		...	...
		58913012L	O|O	85932	89453		...	...
		471700006269	O|O	85932	89453		...	...
		471700131331	O|O	85932	89453		...	...
02-22	Models with Hendrickson HMX 400/460 Haulmax with 16.5" Saddle	60680-004		...	...		83143	...
		60680-004L		...	...		83143	...
		60680004		...	...		83143	...
		60680004L		...	...		83143	...
02-22	Models with Hendrickson HMX 400/460 Haulmax with 17.5" & 18.5" Saddle	60680-005		...	...		83142	...

WESTERN STAR (CONT'D)

4900EX (cont'd)

Year Ano Année	Model Modelo Modle	OEM #		Front Fleetline	Front GasSLX		Rear Fleetline	Rear GasSLX
02-22	Models with Hendrickson HMX 400/460 Haulmax with 17.5" & 18.5" Saddle	60680-005L		...	...		83142	...
		60680005		...	...		83142	...
		60680005L		...	...		83142	...
08-22	Models with Freightliner TufTrac Rear Air Suspension	16-15770-000		...	...	○|○	85956	...
		1615770000		...	...	○|○	85956	...
		481700125969		...	...	○|○	85956	...
		SDA481700125969		...	...	○|○	85956	...

4900FA

02-20	Day Cab Models	18-60772-000	○|○	83026				
		1860772000	○|○	83026				
08-20	Models with 12000 lb Taperleaf Front Suspension	10-13809-000	○|○	85958	...		...	...
		1013809000	○|○	85958	...		...	...
		471700003920	○|○	85958	...		...	...
02-22	Models with Hendrickson Front Airtek	58913-003	○|○	85932	89453		...	...
		58913-003L	○|○	85932	89453		...	...
		58913-012	○|○	85932	89453		...	...
		58913-012L	○|○	85932	89453		...	...
		58913003	○|○	85932	89453		...	...
		58913003L	○|○	85932	89453		...	...
		58913012	○|○	85932	89453		...	...
		58913012L	○|○	85932	89453		...	...
		471700006269	○|○	85932	89453		...	...
		471700131331	○|○	85932	89453		...	...
02-23	Models with Hendrickson HMX 400/460 Haulmax with 16.5" Saddle	60680-004		...	...		83143	...
		60680-004L		...	...		83143	...
		60680004		...	...		83143	...
		60680004L		...	...		83143	...
02-23	Models with Hendrickson HMX 400/460 Haulmax with 17.5" & 18.5" Saddle	60680-005		...	...		83142	...
		60680-005L		...	...		83142	...
		60680005		...	...		83142	...
		60680005L		...	...		83142	...
08-23	Models with Freightliner TufTrac Rear Air Suspension	16-15770-000		...	...	○|○	85956	...
		1615770000		...	...	○|○	85956	...
		481700125969		...	...	○|○	85956	...
		SDA481700125969		...	...	○|○	85956	...

4900SA

02-20	Day Cab Models	18-60772-000	○|○	83026				
		1860772000	○|○	83026				
08-20	Models with 20000 lb Set -Back Front Axle	10-13809-000	○|○	85958	...		...	...
		1013809000	○|○	85958	...		...	...
		471700003920	○|○	85958	...		...	...
02-22	Models with Hendrickson Front Airtek	58913-003	○|○	85932	89453		...	...
		58913-003L	○|○	85932	89453		...	...
		58913-012	○|○	85932	89453		...	...
		58913-012L	○|○	85932	89453		...	...
		58913003	○|○	85932	89453		...	...
		58913003L	○|○	85932	89453		...	...
		58913012	○|○	85932	89453		...	...
		58913012L	○|○	85932	89453		...	...
		471700006269	○|○	85932	89453		...	...
		471700131331	○|○	85932	89453		...	...
02-23	Models with Hendrickson HMX 400/460 Haulmax with 16.5" Saddle	60680-004		...	...		83143	...

Year Ano Année	Model Modelo Modle	OEM #		Front			Rear	
				Fleetline	GasSLX		Fleetline	GasSLX
WESTERN STAR (CONT'D)								
4900SA (cont'd)								
02-23	Models with Hendrickson HMX 400/460 Haulmax with 16.5" Saddle	60680-004L		...	...		83143	...
		60680004		...	...		83143	...
		60680004L		...	...		83143	...
02-23	Models with Hendrickson HMX 400/460 Haulmax with 17.5" & 18.5" Saddle	60680-005		...	...		83142	...
		60680-005L		...	...		83142	...
		60680005		...	...		83142	...
		60680005L		...	...		83142	...
08-23	Models with Freightliner TufTrac Rear Air Suspension	16-15770-000		...	...	O|O	85956	...
		1615770000		...	...	O|O	85956	...
		481700125969		...	...	O|O	85956	...
		SDA481700125969		...	...	O|O	85956	...
5900								
00-01	Models with Hendrickson Front Airtek	58913-003	O|O	85932	89453		...	...
		58913-003L	O|O	85932	89453		...	...
		58913-012	O|O	85932	89453		...	...
		58913-012L	O|O	85932	89453		...	...
		58913003	O|O	85932	89453		...	...
		58913003L	O|O	85932	89453		...	...
		58913012	O|O	85932	89453		...	...
		58913012L	O|O	85932	89453		...	...
		471700006269	O|O	85932	89453		...	...
		471700131331	O|O	85932	89453		...	...
6900								
00-01	Models with Hendrickson Front Airtek	58913-003	O|O	85932	89453		...	...
		58913-003L	O|O	85932	89453		...	...
		58913-012	O|O	85932	89453		...	...
		58913-012L	O|O	85932	89453		...	...
		58913003	O|O	85932	89453		...	...
		58913003L	O|O	85932	89453		...	...
		58913012	O|O	85932	89453		...	...
		58913012L	O|O	85932	89453		...	...
		471700006269	O|O	85932	89453		...	...
		471700131331	O|O	85932	89453		...	...
89-01	Models with O.E.M. Number	66010-3402	O|O	83022				
		66010-3403	O|O	83022				
		660103402	O|O	83022				
		660103403	O|O	83022				
6900XD								
02-16	Models with Hendrickson Front Airtek	58913-003	O|O	85932	89453		...	...
		58913-003L	O|O	85932	89453		...	...
		58913-012	O|O	85932	89453		...	...
		58913-012L	O|O	85932	89453		...	...
		58913003	O|O	85932	89453		...	...
		58913003L	O|O	85932	89453		...	...
		58913012	O|O	85932	89453		...	...
		58913012L	O|O	85932	89453		...	...
		471700006269	O|O	85932	89453		...	...
		471700131331	O|O	85932	89453		...	...
08-16	Models with Freightliner TufTrac Rear Air Suspension	16-15770-000		...	...	O|O	85956	...
		1615770000		...	...	O|O	85956	...
		481700125969		...	...	O|O	85956	...

Year Ano Année	Model Modelo Modle	OEM #		Front			Rear	
				Fleetline	GasSLX		Fleetline	GasSLX
WESTERN STAR (CONT'D)								
6900XD (cont'd)								
08-16	Models with Freightliner TufTrac Rear Air Suspension	SDA481700125969		...	...	○|○	**85956**	...
09-16	Models with 12000 lb Taperleaf Front Suspension	10-13809-000	○|○	**85958**	...		...	...
		1013809000	○|○	**85958**	...		...	...
		471700003920	○|○	**85958**	...		...	...
18-19	Models with 12000 lb Taperleaf Front Suspension	10-13809-000	○|○	**85958**	...		...	...
		1013809000	○|○	**85958**	...		...	...
		471700003920	○|○	**85958**	...		...	...
18-19	Models with Freightliner TufTrac Rear Air Suspension	16-15770-000		...	...	○|○	**85956**	...
		1615770000		...	...	○|○	**85956**	...
		481700125969		...	...	○|○	**85956**	...
		SDA481700125969		...	...	○|○	**85956**	...
18-19	Models with Hendrickson Front Airtek	58913-003	○|○	**85932**	**89453**		...	...
		58913-003L	○|○	**85932**	**89453**		...	...
		58913-012	○|○	**85932**	**89453**		...	...
		58913-012L	○|○	**85932**	**89453**		...	...
		58913003	○|○	**85932**	**89453**		...	...
		58913003L	○|○	**85932**	**89453**		...	...
		58913012	○|○	**85932**	**89453**		...	...
		58913012L	○|○	**85932**	**89453**		...	...
		471700006269	○|○	**85932**	**89453**		...	...
		471700131331	○|○	**85932**	**89453**		...	...
2022	Models with Freightliner TufTrac Rear Air Suspension	16-15770-000		...	...	○|○	**85956**	...
		1615770000		...	...	○|○	**85956**	...
		481700125969		...	...	○|○	**85956**	...
		SDA481700125969		...	...	○|○	**85956**	...
2022	Models with Hendrickson Front Airtek	58913-003	○|○	**85932**	**89453**		...	...
		58913-003L	○|○	**85932**	**89453**		...	...
		58913-012	○|○	**85932**	**89453**		...	...
		58913-012L	○|○	**85932**	**89453**		...	...
		58913003	○|○	**85932**	**89453**		...	...
		58913003L	○|○	**85932**	**89453**		...	...
		58913012	○|○	**85932**	**89453**		...	...
		58913012L	○|○	**85932**	**89453**		...	...
		471700006269	○|○	**85932**	**89453**		...	...
		471700131331	○|○	**85932**	**89453**		...	...
3800 SERIES - HERITAGE CLASS								
	3842S, 3864S Models	37390-4401	○|○	**85053**	**89442**		...	...
		37390-4402	○|○	**85053**	**89442**		...	...
		37390-4403	○|○	**85053**	**89442**		...	...
		373904401	○|○	**85053**	**89442**		...	...
		373904402	○|○	**85053**	**89442**		...	...
		373904403	○|○	**85053**	**89442**		...	...
	With Hendrickson Rear Suspension	47902-8		...	...	○|○	**83122**	**89406**
		47902-13		...	...	○|○	**83122**	**89406**
		47902-24		...	...	○|○	**83137**	...
		479028		...	...	○|○	**83122**	**89406**
		4790213		...	...	○|○	**83122**	**89406**
		4790224		...	...	○|○	**83137**	...
	With Neway Rear Suspension	90044025		...	...	○|○	**83209**	**89414**
		90044907		...	...		**83635**	...
4700 SERIES								
11-20	Models with 18,000 lb - 20,000 lb Flat Leaf Spring and Set Forward Front Axle	10-13684-000	○|○	**85918**	**89449**		...	...

Year Ano Année	Model Modelo Modle	OEM #		Front			Rear	
				Fleetline	GasSLX		Fleetline	GasSLX
WESTERN STAR (CONT'D)								
4700 SERIES (cont'd)								
11-20	Models with 18,000 lb - 20,000 lb Flat Leaf Spring and Set Forward Front Axle	1013684000	O|O	85918	89449		...	...
		471700000470	O|O	85918	89449		...	...
4800 & 4900 SERIES - CONSTELLATION CLASS								
09-12	Models w/ Low Profile Rear Air Suspension	16-18706-000		...	...	O|O	85331	...
		1618706000		...	...	O|O	85331	...
	4842FX, 4864FX, 4964EX, 4964EX, 4942SX or 4964SX Constellation Class	37301-3401	O|O	85053	89442		...	...
		37301-3404	O|O	85053	89442		...	...
		37301-3409	O|O	85053	89442		...	...
		37301-3412	O|O	85053	89442		...	...
		37390-4401	O|O	85053	89442		...	...
		37390-4402	O|O	85053	89442		...	...
		37390-4403	O|O	85053	89442		...	...
		373013401	O|O	85053	89442		...	...
		373013404	O|O	85053	89442		...	...
		373013409	O|O	85053	89442		...	...
		373013412	O|O	85053	89442		...	...
		373904401	O|O	85053	89442		...	...
		373904402	O|O	85053	89442		...	...
		373904403	O|O	85053	89442		...	...
	With Hendrickson HAS-40LH Rear Suspension	57241-1		...	...		83111	...
		572411		...	...		83111	...
	With Hendrickson Rear Suspension	47902-8		...	...	O|O	83122	89406
		47902-13		...	...	O|O	83122	89406
		47902-24		...	...	O|O	83137	...
		479028		...	...	O|O	83122	89406
		4790213		...	...	O|O	83122	89406
		4790224		...	...	O|O	83137	...
	With Neway Rear Suspension	90044025		...	...	O|O	83209	89414
		90044907		...	...		83635	...
		90045099		...	...	O|O	85906	89407
4800 & 4900 SERIES - HERITAGE CLASS								
	4842F, 4864F, 4843S, 4864S, 4942F, 4964F, 4942S or 4964S Heritage Class	37301-3401	O|O	85053	89442		...	...
		37301-3404	O|O	85053	89442		...	...
		37301-3409	O|O	85053	89442		...	...
		37301-3412	O|O	85053	89442		...	...
		37390-4401	O|O	85053	89442		...	...
		37390-4402	O|O	85053	89442		...	...
		37390-4403	O|O	85053	89442		...	...
		373013401	O|O	85053	89442		...	...
		373013404	O|O	85053	89442		...	...
		373013409	O|O	85053	89442		...	...
		373013412	O|O	85053	89442		...	...
		373904401	O|O	85053	89442		...	...
		373904402	O|O	85053	89442		...	...
		373904403	O|O	85053	89442		...	...
	With Hendrickson HAS-40LH Rear Suspension	57241-1		...	...		83111	...
		572411		...	...		83111	...
	With Hendrickson Rear Suspension	47902-8		...	...	O|O	83122	89406
		47902-13		...	...	O|O	83122	89406
		47902-24		...	...	O|O	83137	...
		479028		...	...	O|O	83122	89406
		4790213		...	...	O|O	83122	89406

WESTERN STAR (CONT'D)

4800 & 4900 SERIES - HERITAGE CLASS (cont'd)

Year Ano Année	Model Modelo Modle	OEM #		Front Fleetline	Front GasSLX		Rear Fleetline	Rear GasSLX
	With Hendrickson Rear Suspension	4790224		...	...	○|○	83137	...
	With Neway Rear Suspension	90044025		...	...	○|○	83209	89414
		90044907		...	...		83635	...
		90045099		...	...	○|○	85906	89407

4900

	Models with Multi-leaf Springs and O.E.M Number	16-18331-000	○|○	85053	89442		...	...
		1618331000	○|○	85053	89442		...	...

5800 & 5900 SERIES - CONSTELLATION CLASS

	5842SS, 5864SS, 5942SS or 5964SS Constellation Class	37301-3401	○|○	85053	89442		...	...
		37301-3404	○|○	85053	89442		...	...
		37301-3409	○|○	85053	89442		...	...
		37301-3412	○|○	85053	89442		...	...
		37390-4401	○|○	85053	89442		...	...
		37390-4402	○|○	85053	89442		...	...
		37390-4403	○|○	85053	89442		...	...
		373013401	○|○	85053	89442		...	...
		373013404	○|○	85053	89442		...	...
		373013409	○|○	85053	89442		...	...
		373013412	○|○	85053	89442		...	...
		373904401	○|○	85053	89442		...	...
		373904402	○|○	85053	89442		...	...
		373904403	○|○	85053	89442		...	...
	With Hendrickson Rear Suspension	47902-8		...	...	○|○	83122	89406
		47902-13		...	...	○|○	83122	89406
		47902-24		...	...	○|○	83137	...
		57905-2		...	...	○|○	85006	...
		479028		...	...	○|○	83122	89406
		579052		...	...	○|○	85006	...
		4790213		...	...	○|○	83122	89406
		4790224		...	...	○|○	83137	...
	With Neway Rear Suspension	90044025		...	...	○|○	83209	89414
		90044907		...	...		83635	...
		90045099		...	...	○|○	85906	89407

5900 & 6900 SERIES - HERITAGE CLASS

	5942S, 5964S, 6964F or 6964S Heritage Class	37301-3401	○|○	85053	89442		...	...
		37301-3404	○|○	85053	89442		...	...
		37301-3409	○|○	85053	89442		...	...
		37301-3412	○|○	85053	89442		...	...
		37390-4401	○|○	85053	89442		...	...
		37390-4402	○|○	85053	89442		...	...
		37390-4403	○|○	85053	89442		...	...
		373013401	○|○	85053	89442		...	...
		373013404	○|○	85053	89442		...	...
		373013409	○|○	85053	89442		...	...
		373013412	○|○	85053	89442		...	...
		373904401	○|○	85053	89442		...	...
		373904402	○|○	85053	89442		...	...
		373904403	○|○	85053	89442		...	...
	Additional O.E.M. Interchanges	35901-3406	○|○	85305				
		35901-3409	○|○	85304				
		35901-3410	○|○	85307				

WESTERN STAR (CONT'D)

5900 & 6900 SERIES - HERITAGE CLASS (cont'd)

Year Ano Année	Model Modelo Modle	OEM #		Front			Rear	
				Fleetline	GasSLX		Fleetline	GasSLX
	Additional O.E.M. Interchanges	35901-3413	O|O	85006				
		35901-3420	O|O	85303 or 89422				
		615016	O|O	83401	...		...	...
		676081	O|O	83401	...		...	...
		676082	O|O	83401	...		...	...
		1011839	O|O	83216	...		...	...
		359013406	O|O	85305				
		359013409	O|O	85304				
		359013410	O|O	85307				
		359013413	O|O	85006				
		359013420	O|O	85303 or 89422				
	All with 4 shock Front System	.....	O|O	83401	...		...	...
	Models with O.E.M. Number	02-7005976	−|−	83400	...		...	...
		02-7005977	−|−	83400	...		...	...
		04-9041375		...	...	O|O	85315	...
		28R010	O|O	83216	...		...	...
		35066-4413		...	...	O|O	83122	89406
		35901-0001		...	...	O|O	83209	89414
		35901-4403		...	...	O|O	85060	...
		37301-3405	O|O	85053	89442		...	...
		57252	O|O	85308	89422		...	...
		57905-1		...	...	O|O	85976	...
		579051		...	...	O|O	85976	...
		665682	O|O	85053	89442		...	...
		027005976	−|−	83400	...		...	...
		027005977	−|−	83400	...		...	...
		049041375		...	...	O|O	85315	...
		350664413		...	...	O|O	83122	89406
		359010001		...	...	O|O	83209	89414
		359014403		...	...	O|O	85060	...
		373013405	O|O	85053	89442		...	...
		CP5222		...	...	O|O	85315	...
		CP-5222		...	...	O|O	85315	...
	With Hendrickson HAS-40LH Rear Suspension	57241-1		...	...		83111	...
		572411		...	...		83111	...
	With Hendrickson Rear Suspension	47902-8		...	...	O|O	83122	89406
		47902-13		...	...	O|O	83122	89406
		47902-24		...	...	O|O	83137	...
		57905-2		...	...	O|O	85006	...
		60675-002		...	...	O|O	85979	...
		60675-002L		...	...	O|O	85979	...
		479028		...	...	O|O	83122	89406
		579052		...	...	O|O	85006	...
		4790213		...	...	O|O	83122	89406
		4790224		...	...	O|O	83137	...
		60675002		...	...	O|O	85979	...
		60675002L		...	...	O|O	85979	...
	With Neway Rear Suspension	90044025		...	...	O|O	83209	89414
		90044907		...	...		83635	...
		90045099		...	...	O|O	85906	89407

6900

	Models with Multi-leaf Springs and O.E.M Number	16-18331-000	O|O	85053	89442		...	...

Year Ano Année	Model Modelo Modle	OEM #		Front			Rear	
				Fleetline	GasSLX		Fleetline	GasSLX
WESTERN STAR (CONT'D)								
6900 (cont'd)								
	Models with Multi-leaf Springs and O.E.M Number	1618331000	O|O	**85053**	89442		...	...
6900 SX MODELS								
01-15	Models with O.E.M. Number	66010-3407	O|O	**83065**				
		660103407	O|O	**83065**				
86-21	Conventional Tractors with Link Cabmate Model WSC4000	1201-0012	O|O	**83023**				
		1202-0012	O|O	**83023**				
		12010012	O|O	**83023**				
		12020012	O|O	**83023**				
10-23	Models with Neway ADZ Rear Suspension	90045605		...	...	O|O	**85109**	...
		90045803		...	...	O|O	**85109**	...
		90045812		...	...	O|O	**85109**	...
		471700004423		...	...	O|O	**85109**	...
		471700013186		...	...	O|O	**85109**	...
	6900 Models	725470	O|O	**83010**				
	Constellation Day Cab Models	81-4903003500	O|O	**83026**				
		66010-3405	O|O	**83026**				
		660103405	O|O	**83026**				
		814903003500	O|O	**83026**				
	Constellation Sleeper Cab Models	18-60773-000		**83027**				
		66010-3406		**83027**				
		660103406		**83027**				
		1860773000		**83027**				
		814903003501		**83027**				
	Models with Link Cab Suspension	1202-0032	O|O	**83016**				
		12020032	O|O	**83016**				
	Models with O.E.M. Number	66010-3404	O|O	**83022**				
		617547	O|O	**83022**				
		654846		**83027**				
		660103404	O|O	**83022**				
		GBL 654916	O|O	**83026**				
WESTERN UNIT STABILAIRE SUSPENSION								
	Model 893T Trailer Suspension	.....		...	...	O|O	**85307**	...
	Models with O.E.M. Number	80370		...	...	O|O	**85304**	...
		80600		...	...	O|O	**85300**	89419
		101030		...	...	O|O	**85307**	...
		101364		...	...	O|O	**85305**	...
		4939967		...	...	O|O	**85308**	89422
	Model TDA204, 205, 242 - Truck Drive Axle Suspension	.....		...	...	O|O	**85307**	...
WESTPORT AXLE CORP.								
	Self - Steering Axle Shocks	143699-0185	O|O	**646177**				
		646124	O|O	**646177**				
WHEELED COACH IND								
	Citimedic models with Ford E350 & E450 Chassis	ASH1136		...	...	–|O	**G63623**	...
		ASH-1136		...	...	–|O	**G63623**	...
	Citimedic models with Ford E350 & E450 Chassis To 2022	ASH1154	–|O	**G63622**	...		...	...
		ASH-1154	–|O	**G63622**	...		...	...
WINNEBAGO								
ACCESS								
07-13	MotorHomes with Ford E350 or E450 Chassis	8C2Z18124D	–|O	**G63622**	...		...	...

Year Ano Année	Model Modelo Modle	OEM #		Front			Rear	
				Fleetline	GasSLX		Fleetline	GasSLX
WINNEBAGO (CONT'D)								
ACCESS (cont'd)								
07-13	MotorHomes with Ford E350 or E450 Chassis	8C2Z18125D		...	...		G63623	...
		8C2Z-18124-D		G63622	...		...	...
		8C2Z-18125-D		...	...		G63623	...
		8C24-18045-DA		G63622	...		...	...
		8C24-18080-DB		...	...		G63623	...
		8C2418045DA		G63622	...		...	...
		8C2418080DB		...	...		G63623	...
		ASH1136		...	...		G63623	...
		ASH1154		G63622	...		...	...
		ASH-1136		...	...		G63623	...
		ASH-1154		G63622	...		...	...
		AT163G		G63622	...		...	...
		AT164G		...	...		G63623	...
		AT-163G		G63622	...		...	...
		AT-164G		...	...		G63623	...
ACCESS PREMIER								
2014	MotorHomes with Ford E350 or E450 Chassis	8C2Z18124D		G63622	...		...	...
		8C2Z18125D		...	...		G63623	...
		8C2Z-18124-D		G63622	...		...	...
		8C2Z-18125-D		...	...		G63623	...
		8C24-18045-DA		G63622	...		...	...
		8C24-18080-DB		...	...		G63623	...
		8C2418045DA		G63622	...		...	...
		8C2418080DB		...	...		G63623	...
		ASH1136		...	...		G63623	...
		ASH1154		G63622	...		...	...
		ASH-1136		...	...		G63623	...
		ASH-1154		G63622	...		...	...
		AT163G		G63622	...		...	...
		AT164G		...	...		G63623	...
		AT-163G		G63622	...		...	...
		AT-164G		...	...		G63623	...
ADVENTURER								
99-04	Motorhome Chassis with 20,500 lb GVW to 22,000 lb GVW	9U9Z18125A		...	...		83122	89406
		9U9Z-18125-A		...	...		83122	89406
		9U94-18080-AA		...	...		83122	89406
		9U9418080AA		...	...		83122	89406
		ASH137		...	...		83122	89406
		ASH1023		...	...		83122	89406
		ASH1206		...	...		83122	89406
		ASH1230		...	...		83122	89406
		ASH25824		...	...		83122	89406
		ASH-137		...	...		83122	89406
		ASH-1023		...	...		83122	89406
		ASH-1206		...	...		83122	89406
		ASH-1230		...	...		83122	89406
		ASH-25824		...	...		83122	89406
		AT621		...	...		83122	89406
		AT-621		...	...		83122	89406
		HU9Z18125B		...	...		83122	89406
		HU9Z-18125-B		...	...		83122	89406
04-09	Models with Workhorse W22, & W24 MotorHome Chassis with O.E.M. Number	24-153256		...	...		85124	...

WINNEBAGO (CONT'D)

ADVENTURER (cont'd)

Year Ano Année	Model Modelo Modle	OEM #		Front			Rear	
				Fleetline	GasSLX		Fleetline	GasSLX
04-09	Models with Workhorse W22, & W24 MotorHome Chassis with O.E.M. Number	F4-BE5-F325-HO		...	...	–|–	85124	...
		W0005663		...	...	–|–	85124	...
06-09	Motorhome Chassis with 20,500 lb GVW to 22,000 lb GVW	9U9Z18125A		...	...	o|o	83122	89406
		9U9Z-18125-A		...	...	o|o	83122	89406
		9U94-18080-AA		...	...	o|o	83122	89406
		9U9418080AA		...	...	o|o	83122	89406
		ASH137		...	...	o|o	83122	89406
		ASH1023		...	...	o|o	83122	89406
		ASH1206		...	...	o|o	83122	89406
		ASH1230		...	...	o|o	83122	89406
		ASH25824		...	...	o|o	83122	89406
		ASH-137		...	...	o|o	83122	89406
		ASH-1023		...	...	o|o	83122	89406
		ASH-1206		...	...	o|o	83122	89406
		ASH-1230		...	...	o|o	83122	89406
		ASH-25824		...	...	o|o	83122	89406
		AT621		...	...	o|o	83122	89406
		AT-621		...	...	o|o	83122	89406
		HU9Z18125B		...	...	o|o	83122	89406
		HU9Z-18125-B		...	...	o|o	83122	89406
08-09	Motorhome Chassis with 16,000 lb GVW to 18,000 lb GVW	9U9Z18125B		...	...	o|o	83122	89406
		9U9Z-18125-B		...	...	o|o	83122	89406
		ASH25825		...	...	o|o	83122	89406
		ASH-25825		...	...	o|o	83122	89406
98-11	Models with W20 & W22 Workhorse Motorhome Chassis	24-153249	o|o	85125	...		...	...
		24-186629	o|o	85125	...		...	...
		24153249	o|o	85125	...		...	...
		24186629	o|o	85125	...		...	...
		F4BE5A832MO	o|o	85125	...		...	...
		F4BE5B492HO	o|o	85125	...		...	...
		F4BE5F324HO	o|o	85125	...		...	...
		F4-BE5-A832-MO	o|o	85125	...		...	...
		F4-BE5-B492-HO	o|o	85125	...		...	...
		F4-BE5-F324-HO	o|o	85125	...		...	...
		W0005662	o|o	85125	...		...	...
		W0006254	o|o	85125	...		...	...
11-17	Motorhome Chassis with 16,000 lb GVW to 18,000 lb GVW	9U9Z18125B		...	...	o|o	83122	89406
		9U9Z-18125-B		...	...	o|o	83122	89406
		ASH25825		...	...	o|o	83122	89406
		ASH-25825		...	...	o|o	83122	89406
11-17	Motorhome Chassis with 20,500 lb GVW to 22,000 lb GVW	9U9Z18125A		...	...	o|o	83122	89406
		9U9Z-18125-A		...	...	o|o	83122	89406
		9U94-18080-AA		...	...	o|o	83122	89406
		9U9418080AA		...	...	o|o	83122	89406
		ASH137		...	...	o|o	83122	89406
		ASH1023		...	...	o|o	83122	89406
		ASH1206		...	...	o|o	83122	89406
		ASH1230		...	...	o|o	83122	89406
		ASH25824		...	...	o|o	83122	89406
		ASH-137		...	...	o|o	83122	89406
		ASH-1023		...	...	o|o	83122	89406
		ASH-1206		...	...	o|o	83122	89406
		ASH-1230		...	...	o|o	83122	89406

WINNEBAGO (CONT'D)

ADVENTURER (cont'd)

Year Ano Année	Model Modelo Modle	OEM #		Front			Rear	
				Fleetline	GasSLX		Fleetline	GasSLX
11-17	Motorhome Chassis with 20,500 lb GVW to 22,000 lb GVW	ASH-25824		...	...	O|O	83122	89406
		AT621		...	...	O|O	83122	89406
		AT-621		...	...	O|O	83122	89406
		HU9Z18125B		...	...	O|O	83122	89406
		HU9Z-18125-B		...	...	O|O	83122	89406
92-17	MotorHomes with Ford F53 Chassis with 16,000 lb GVW to 22,000 lb GVW	1C34-18045-AA	O|O	83209	89414		...	...
		1C34-18045-JA	O|O	83209	89414		...	...
		1C3418045AA	O|O	83209	89414		...	...
		1C3418045JA	O|O	83209	89414		...	...
		9U9Z18124A	O|O	83209	89414		...	...
		9U9Z-18124-A	O|O	83209	89414		...	...
		9U94-18045-AA	O|O	83209	89414		...	...
		9U9418045AA	O|O	83209	89414		...	...
		ASH294	O|O	83209	89414		...	...
		ASH1022	O|O	83209	89414		...	...
		ASH1205	O|O	83209	89414		...	...
		ASH1228	O|O	83209	89414		...	...
		ASH1229	O|O	83209	89414		...	...
		ASH25822	O|O	83209	89414		...	...
		ASH25823	O|O	83209	89414		...	...
		ASH-294	O|O	83209	89414		...	...
		ASH-1022	O|O	83209	89414		...	...
		ASH-1205	O|O	83209	89414		...	...
		ASH-1228	O|O	83209	89414		...	...
		ASH-1229	O|O	83209	89414		...	...
		ASH-25822	O|O	83209	89414		...	...
		ASH-25823	O|O	83209	89414		...	...
		AT620	O|O	83209	89414		...	...
		AT766	O|O	83209	89414		...	...
		AT-620	O|O	83209	89414		...	...
		AT-766	O|O	83209	89414		...	...
19-21	Motorhome Chassis with 16,000 lb GVW to 18,000 lb GVW	9U9Z18125B		...	...	O|O	83122	89406
		9U9Z-18125-B		...	...	O|O	83122	89406
		ASH25825		...	...	O|O	83122	89406
		ASH-25825		...	...	O|O	83122	89406
19-21	Motorhome Chassis with 20,500 lb GVW to 22,000 lb GVW	9U9Z18125A		...	...	O|O	83122	89406
		9U9Z-18125-A		...	...	O|O	83122	89406
		9U94-18080-AA		...	...	O|O	83122	89406
		9U9418080AA		...	...	O|O	83122	89406
		ASH137		...	...	O|O	83122	89406
		ASH1023		...	...	O|O	83122	89406
		ASH1206		...	...	O|O	83122	89406
		ASH1230		...	...	O|O	83122	89406
		ASH25824		...	...	O|O	83122	89406
		ASH-137		...	...	O|O	83122	89406
		ASH-1023		...	...	O|O	83122	89406
		ASH-1206		...	...	O|O	83122	89406
		ASH-1230		...	...	O|O	83122	89406
		ASH-25824		...	...	O|O	83122	89406
		AT621		...	...	O|O	83122	89406
		AT-621		...	...	O|O	83122	89406
		HU9Z18125B		...	...	O|O	83122	89406
		HU9Z-18125-B		...	...	O|O	83122	89406
19-22	MotorHomes with Ford F53 Chassis with 16,000 lb GVW to 22,000 lb GVW	1C34-18045-AA	O|O	83209	89414		...	...

Year Ano Année	Model Modelo Modle	OEM #		Front			Rear	
				Fleetline	GasSLX		Fleetline	GasSLX
WINNEBAGO (CONT'D)								
ADVENTURER (cont'd)								
19-22	MotorHomes with Ford F53 Chassis with 16,000 lb GVW to 22,000 lb GVW	1C34-18045-JA	O|O	**83209**	**89414**		...	...
		1C3418045AA	O|O	**83209**	**89414**		...	...
		1C3418045JA	O|O	**83209**	**89414**		...	...
		9U9Z18124A	O|O	**83209**	**89414**		...	...
		9U9Z-18124-A	O|O	**83209**	**89414**		...	...
		9U94-18045-AA	O|O	**83209**	**89414**		...	...
		9U9418045AA	O|O	**83209**	**89414**		...	...
		ASH294	O|O	**83209**	**89414**		...	...
		ASH1022	O|O	**83209**	**89414**		...	...
		ASH1205	O|O	**83209**	**89414**		...	...
		ASH1228	O|O	**83209**	**89414**		...	...
		ASH1229	O|O	**83209**	**89414**		...	...
		ASH25822	O|O	**83209**	**89414**		...	...
		ASH25823	O|O	**83209**	**89414**		...	...
		ASH-294	O|O	**83209**	**89414**		...	...
		ASH-1022	O|O	**83209**	**89414**		...	...
		ASH-1205	O|O	**83209**	**89414**		...	...
		ASH-1228	O|O	**83209**	**89414**		...	...
		ASH-1229	O|O	**83209**	**89414**		...	...
		ASH-25822	O|O	**83209**	**89414**		...	...
		ASH-25823	O|O	**83209**	**89414**		...	...
		AT620	O|O	**83209**	**89414**		...	...
		AT766	O|O	**83209**	**89414**		...	...
		AT-620	O|O	**83209**	**89414**		...	...
		AT-766	O|O	**83209**	**89414**		...	...
ASPECT								
05-17	MotorHomes with Ford E350 or E450 Chassis	8C2Z18124D	–|O	**G63622**	...		...	...
		8C2Z18125D		...	...	–|O	**G63623**	...
		8C2Z-18125-D		...	...	–|O	**G63623**	...
		8C24-18045-DA	–|O	**G63622**	...		...	...
		8C2418045DA	–|O	**G63622**	...		...	...
		8C2418080DB		...	...	–|O	**G63623**	...
		ASH1136		...	...	–|O	**G63623**	...
		ASH1154	–|O	**G63622**	...		...	...
		ASH-1136		...	...	–|O	**G63623**	...
		ASH-1154	–|O	**G63622**	...		...	...
		AT163G	–|O	**G63622**	...		...	...
		AT164G		...	...	–|O	**G63623**	...
		AT-163G	–|O	**G63622**	...		...	...
		AT-164G		...	...	–|O	**G63623**	...
06-17	MotorHomes with Ford E350 or E450 Chassis	8C2Z-18124-D	–|O	**G63622**	...		...	...
		8C24-18080-DB		...	...	–|O	**G63623**	...
CAMBRIA								
05-07	MotorHomes with Ford E350 or E450 Chassis	ASH1154	–|O	**G63622**	...		...	...
		AT164G		...	...	–|O	**G63623**	...
05-08	MotorHomes with Ford E350 or E450 Chassis	8C2Z18124D	–|O	**G63622**	...		...	...
		8C2Z18125D		...	...	–|O	**G63623**	...
		8C2Z-18124-D	–|O	**G63622**	...		...	...
		8C2Z-18125-D		...	...	–|O	**G63623**	...
		8C24-18045-DA	–|O	**G63622**	...		...	...
		8C24-18080-DB		...	...	–|O	**G63623**	...
		8C2418045DA	–|O	**G63622**	...		...	...

Year Ano Année	Model Modelo Modle	OEM #		Front			Rear	
				Fleetline	GasSLX		Fleetline	GasSLX

WINNEBAGO (CONT'D)

CAMBRIA (cont'd)

05-08	MotorHomes with Ford E350 or E450 Chassis	8C2418080DB		...	...	−|O	G63623	...
		ASH1136		...	...	−|O	G63623	...
		ASH-1136		...	...	−|O	G63623	...
		ASH-1154	−|O	G63622	...		...	...
		AT163G	−|O	G63622	...		...	...
		AT-163G	−|O	G63622	...		...	...
		AT-164G		...	...	−|O	G63623	...
16-17	MotorHomes with Ford E350 or E450 Chassis	8C2Z18124D	−|O	G63622	...		...	...
		8C2Z18125D		...	...	−|O	G63623	...
		8C2Z-18124-D	−|O	G63622	...		...	...
		8C2Z-18125-D		...	...	−|O	G63623	...
		8C24-18045-DA	−|O	G63622	...		...	...
		8C24-18080-DB		...	...	−|O	G63623	...
		8C2418045DA	−|O	G63622	...		...	...
		8C2418080DB		...	...	−|O	G63623	...
		ASH1136		...	...	−|O	G63623	...
		ASH1154	−|O	G63622	...		...	...
		ASH-1136		...	...	−|O	G63623	...
		ASH-1154	−|O	G63622	...		...	...
		AT163G	−|O	G63622	...		...	...
		AT164G		...	...	−|O	G63623	...
		AT-163G	−|O	G63622	...		...	...
		AT-164G		...	...	−|O	G63623	...

INTENET

18-20	Motorhome Chassis with 16,000 lb GVW to 18,000 lb GVW	9U9Z18125B		...	...	O|O	83122	89406
		9U9Z-18125-B		...	...	O|O	83122	89406
		ASH25825		...	...	O|O	83122	89406
		ASH-25825		...	...	O|O	83122	89406
18-20	Motorhome Chassis with 20,500 lb GVW to 22,000 lb GVW	9U9Z18125A		...	...	O|O	83122	89406
		9U9Z-18125-A		...	...	O|O	83122	89406
		9U94-18080-AA		...	...	O|O	83122	89406
		9U9418080AA		...	...	O|O	83122	89406
		ASH137		...	...	O|O	83122	89406
		ASH1023		...	...	O|O	83122	89406
		ASH1206		...	...	O|O	83122	89406
		ASH1230		...	...	O|O	83122	89406
		ASH25824		...	...	O|O	83122	89406
		ASH-137		...	...	O|O	83122	89406
		ASH-1023		...	...	O|O	83122	89406
		ASH-1206		...	...	O|O	83122	89406
		ASH-1230		...	...	O|O	83122	89406
		ASH-25824		...	...	O|O	83122	89406
		AT621		...	...	O|O	83122	89406
		AT-621		...	...	O|O	83122	89406
		HU9Z18125B		...	...	O|O	83122	89406
		HU9Z-18125-B		...	...	O|O	83122	89406
18-20	MotorHomes with Ford F53 Chassis with 16,000 lb GVW to 22,000 lb GVW	ASH294	O|O	83209	89414		...	...
		ASH1022	O|O	83209	89414		...	...
		ASH1205	O|O	83209	89414		...	...
		ASH1228	O|O	83209	89414		...	...
		ASH1229	O|O	83209	89414		...	...
		ASH25822	O|O	83209	89414		...	...
		ASH25823	O|O	83209	89414		...	...

Year Ano Année	Model Modelo Modle	OEM #		Front			Rear	
				Fleetline	GasSLX		Fleetline	GasSLX
WINNEBAGO (CONT'D)								
INTENET (cont'd)								
18-20	MotorHomes with Ford F53 Chassis with 16,000 lb GVW to 22,000 lb GVW	ASH-294	O|O	**83209**	**89414**		...	...
		ASH-1022	O|O	**83209**	**89414**		...	...
		ASH-1205	O|O	**83209**	**89414**		...	...
		ASH-1228	O|O	**83209**	**89414**		...	...
		ASH-1229	O|O	**83209**	**89414**		...	...
		ASH-25822	O|O	**83209**	**89414**		...	...
		ASH-25823	O|O	**83209**	**89414**		...	...
JOURNEY								
02-06	MotorHomes with Freightliner XC Chassis and ADL200 Suspension w/ 20K Rear	16-16736-000		...	...	O|O	**85029**	...
		16-16873-000		...	...	O|O	**85029**	...
		1616736000		...	...	O|O	**85029**	...
		1616873000		...	...	O|O	**85029**	...
		141700131809		...	...	O|O	**85029**	...
02-06	MotorHomes with Freightliner XC Chassis and AS120 Front Suspension	16-16737-000	O|O	**83160**	...		...	...
		16-16874-000	O|O	**83160**	...		...	...
		1616737000	O|O	**83160**	...		...	...
		1616874000	O|O	**83160**	...		...	...
		141700131810	O|O	**83160**	...		...	...
MINNIE								
00-02	MotorHomes with Ford E350 or E450 Chassis	AT164G		...	...	–|O	**G63623**	...
00-05	MotorHomes with Ford E350 or E450 Chassis	8C2Z18124D	–|O	**G63622**	...		...	...
		8C2Z18125D		...	...	–|O	**G63623**	...
		8C2Z-18124-D	–|O	**G63622**	...		...	...
		8C2Z-18125-D		...	...	–|O	**G63623**	...
		8C24-18045-DA	–|O	**G63622**	...		...	...
		8C24-18080-DB		...	...	–|O	**G63623**	...
		8C2418045DA	–|O	**G63622**	...		...	...
		8C2418080DB		...	...	–|O	**G63623**	...
		ASH1136		...	...	–|O	**G63623**	...
		ASH1154	–|O	**G63622**	...		...	...
		ASH-1136		...	...	–|O	**G63623**	...
		ASH-1154	–|O	**G63622**	...		...	...
		AT163G	–|O	**G63622**	...		...	...
		AT-163G	–|O	**G63622**	...		...	...
		AT-164G		...	...	–|O	**G63623**	...
04-05	MotorHomes with Ford E350 or E450 Chassis	AT164G		...	...	–|O	**G63623**	...
OUTLOOK								
06-10	MotorHomes with Ford E350 or E450 Chassis	8C2Z18124D	–|O	**G63622**	...		...	...
		8C2Z18125D		...	...	–|O	**G63623**	...
		8C2Z-18124-D	–|O	**G63622**	...		...	...
		8C2Z-18125-D		...	...	–|O	**G63623**	...
		8C24-18045-DA	–|O	**G63622**	...		...	...
		8C24-18080-DB		...	...	–|O	**G63623**	...
		8C2418045DA	–|O	**G63622**	...		...	...
		8C2418080DB		...	...	–|O	**G63623**	...
		ASH1136		...	...	–|O	**G63623**	...
		ASH1154	–|O	**G63622**	...		...	...
		ASH-1136		...	...	–|O	**G63623**	...
		ASH-1154	–|O	**G63622**	...		...	...
		AT163G	–|O	**G63622**	...		...	...
		AT164G		...	...	–|O	**G63623**	...

Year Ano Année	Model Modelo Modle	OEM #		Front			Rear	
				Fleetline	GasSLX		Fleetline	GasSLX

WINNEBAGO (CONT'D)

OUTLOOK (cont'd)

06-10	MotorHomes with Ford E350 or E450 Chassis	AT-163G	−|O	**G63622**	...		...	...
		AT-164G		...	...	−|O	**G63623**	...
19-21	MotorHomes with Ford E350 or E450 Chassis	8C2Z18124D	−|O	**G63622**	...		...	...
		8C2Z18125D		...	...	−|O	**G63623**	...
		8C2Z-18124-D	−|O	**G63622**	...		...	...
		8C2Z-18125-D		...	...	−|O	**G63623**	...
		8C24-18045-DA	−|O	**G63622**	...		...	...
		8C24-18080-DB		...	...	−|O	**G63623**	...
		8C2418045DA	−|O	**G63622**	...		...	...
		8C2418080DB		...	...	−|O	**G63623**	...
		ASH1136		...	...	−|O	**G63623**	...
		ASH1154	−|O	**G63622**	...		...	...
		ASH-1136		...	...	−|O	**G63623**	...
		ASH-1154	−|O	**G63622**	...		...	...
		AT163G	−|O	**G63622**	...		...	...
		AT164G		...	...	−|O	**G63623**	...
		AT-163G	−|O	**G63622**	...		...	...
		AT-164G		...	...	−|O	**G63623**	...

SIGHTSEER

02-04	Motorhome Chassis with 20,500 lb GVW to 22,000 lb GVW	9U9Z18125A		...	...	O|O	**83122**	**89406**
		9U9Z-18125-A		...	...	O|O	**83122**	**89406**
		9U94-18080-AA		...	...	O|O	**83122**	**89406**
		9U9418080AA		...	...	O|O	**83122**	**89406**
		ASH137		...	...	O|O	**83122**	**89406**
		ASH1023		...	...	O|O	**83122**	**89406**
		ASH1206		...	...	O|O	**83122**	**89406**
		ASH1230		...	...	O|O	**83122**	**89406**
		ASH25824		...	...	O|O	**83122**	**89406**
		ASH-137		...	...	O|O	**83122**	**89406**
		ASH-1023		...	...	O|O	**83122**	**89406**
		ASH-1206		...	...	O|O	**83122**	**89406**
		ASH-1230		...	...	O|O	**83122**	**89406**
		ASH-25824		...	...	O|O	**83122**	**89406**
		AT621		...	...	O|O	**83122**	**89406**
		AT-621		...	...	O|O	**83122**	**89406**
		HU9Z18125B		...	...	O|O	**83122**	**89406**
		HU9Z-18125-B		...	...	O|O	**83122**	**89406**
06-09	Motorhome Chassis with 20,500 lb GVW to 22,000 lb GVW	9U9Z18125A		...	...	O|O	**83122**	**89406**
		9U9Z-18125-A		...	...	O|O	**83122**	**89406**
		9U94-18080-AA		...	...	O|O	**83122**	**89406**
		9U9418080AA		...	...	O|O	**83122**	**89406**
		ASH137		...	...	O|O	**83122**	**89406**
		ASH1023		...	...	O|O	**83122**	**89406**
		ASH1206		...	...	O|O	**83122**	**89406**
		ASH1230		...	...	O|O	**83122**	**89406**
		ASH25824		...	...	O|O	**83122**	**89406**
		ASH-137		...	...	O|O	**83122**	**89406**
		ASH-1023		...	...	O|O	**83122**	**89406**
		ASH-1206		...	...	O|O	**83122**	**89406**
		ASH-1230		...	...	O|O	**83122**	**89406**
		ASH-25824		...	...	O|O	**83122**	**89406**
		AT621		...	...	O|O	**83122**	**89406**
		AT-621		...	...	O|O	**83122**	**89406**

Year Ano Année	Model Modelo Modle	OEM #		Front			Rear	
				Fleetline	GasSLX		Fleetline	GasSLX
WINNEBAGO (CONT'D)								
SIGHTSEER (cont'd)								
06-09	Motorhome Chassis with 20,500 lb GVW to 22,000 lb GVW	HU9Z18125B		...	...		83122	89406
		HU9Z-18125-B		...	...		83122	89406
08-09	Motorhome Chassis with 16,000 lb GVW to 18,000 lb GVW	9U9Z18125B		...	...		83122	89406
		9U9Z-18125-B		...	...		83122	89406
		ASH25825		...	...		83122	89406
		ASH-25825		...	...		83122	89406
02-17	MotorHomes with Ford F53 Chassis with 16,000 lb GVW to 22,000 lb GVW	1C34-18045-AA		83209	89414		...	...
		1C34-18045-JA		83209	89414		...	...
		1C3418045AA		83209	89414		...	...
		1C3418045JA		83209	89414		...	...
		9U9Z18124A		83209	89414		...	...
		9U9Z-18124-A		83209	89414		...	...
		9U94-18045-AA		83209	89414		...	...
		9U9418045AA		83209	89414		...	...
		ASH294		83209	89414		...	...
		ASH1022		83209	89414		...	...
		ASH1205		83209	89414		...	...
		ASH1228		83209	89414		...	...
		ASH1229		83209	89414		...	...
		ASH25822		83209	89414		...	...
		ASH25823		83209	89414		...	...
		ASH-294		83209	89414		...	...
		ASH-1022		83209	89414		...	...
		ASH-1205		83209	89414		...	...
		ASH-1228		83209	89414		...	...
		ASH-1229		83209	89414		...	...
		ASH-25822		83209	89414		...	...
		ASH-25823		83209	89414		...	...
		AT620		83209	89414		...	...
		AT766		83209	89414		...	...
		AT-620		83209	89414		...	...
		AT-766		83209	89414		...	...
11-17	Motorhome Chassis with 16,000 lb GVW to 18,000 lb GVW	9U9Z18125B		...	...		83122	89406
		9U9Z-18125-B		...	...		83122	89406
		ASH25825		...	...		83122	89406
		ASH-25825		...	...		83122	89406
11-17	Motorhome Chassis with 20,500 lb GVW to 22,000 lb GVW	9U9Z18125A		...	...		83122	89406
		9U9Z-18125-A		...	...		83122	89406
		9U94-18080-AA		...	...		83122	89406
		9U9418080AA		...	...		83122	89406
		ASH137		...	...		83122	89406
		ASH1023		...	...		83122	89406
		ASH1206		...	...		83122	89406
		ASH1230		...	...		83122	89406
		ASH25824		...	...		83122	89406
		ASH-137		...	...		83122	89406
		ASH-1023		...	...		83122	89406
		ASH-1206		...	...		83122	89406
		ASH-1230		...	...		83122	89406
		ASH-25824		...	...		83122	89406
		AT621		...	...		83122	89406
		AT-621		...	...		83122	89406
		HU9Z18125B		...	...		83122	89406
		HU9Z-18125-B		...	...		83122	89406

Year Ano Année	Model Modelo Modle	OEM #		Front			Rear	
				Fleetline	GasSLX		Fleetline	GasSLX

WINNEBAGO (CONT'D)

SPIRIT

00-02	MotorHomes with Ford E350 or E450 Chassis	ASH1154	−|O	G63622	...		...	...
		AT164G		...	...	−|O	G63623	...
00-07	MotorHomes with Ford E350 or E450 Chassis	8C2Z18124D	−|O	G63622	...		...	...
		8C2Z18125D		...	...	−|O	G63623	...
		8C2Z-18124-D	−|O	G63622	...		...	...
		8C2Z-18125-D		...	...	−|O	G63623	...
		8C24-18045-DA	−|O	G63622	...		...	...
		8C24-18080-DB		...	...	−|O	G63623	...
		8C2418045DA	−|O	G63622	...		...	...
		8C2418080DB		...	...	−|O	G63623	...
		ASH1136		...	...	−|O	G63623	...
		ASH-1136		...	...	−|O	G63623	...
		ASH-1154	−|O	G63622	...		...	...
		AT163G	−|O	G63622	...		...	...
		AT-163G	−|O	G63622	...		...	...
		AT-164G		...	...	−|O	G63623	...
04-07	MotorHomes with Ford E350 or E450 Chassis	ASH1154	−|O	G63622	...		...	...
		AT164G		...	...	−|O	G63623	...
16-22	MotorHomes with Ford E350 or E450 Chassis	8C2Z18124D	−|O	G63622	...		...	...
		8C2Z18125D		...	...	−|O	G63623	...
		8C2Z-18124-D	−|O	G63622	...		...	...
		8C2Z-18125-D		...	...	−|O	G63623	...
		8C24-18045-DA	−|O	G63622	...		...	...
		8C24-18080-DB		...	...	−|O	G63623	...
		8C2418045DA	−|O	G63622	...		...	...
		8C2418080DB		...	...	−|O	G63623	...
		ASH1136		...	...	−|O	G63623	...
		ASH1154	−|O	G63622	...		...	...
		ASH-1136		...	...	−|O	G63623	...
		ASH-1154	−|O	G63622	...		...	...
		AT163G	−|O	G63622	...		...	...
		AT164G		...	...	−|O	G63623	...
		AT-163G	−|O	G63622	...		...	...
		AT-164G		...	...	−|O	G63623	...

SUNOVA

02-04	Motorhome Chassis with 20,500 lb GVW to 22,000 lb GVW	9U9Z18125A		...	...	O|O	83122	89406
		9U9Z-18125-A		...	...	O|O	83122	89406
		9U94-18080-AA		...	...	O|O	83122	89406
		9U9418080AA		...	...	O|O	83122	89406
		ASH137		...	...	O|O	83122	89406
		ASH1023		...	...	O|O	83122	89406
		ASH1206		...	...	O|O	83122	89406
		ASH1230		...	...	O|O	83122	89406
		ASH25824		...	...	O|O	83122	89406
		ASH-137		...	...	O|O	83122	89406
		ASH-1023		...	...	O|O	83122	89406
		ASH-1206		...	...	O|O	83122	89406
		ASH-1230		...	...	O|O	83122	89406
		ASH-25824		...	...	O|O	83122	89406
		AT621		...	...	O|O	83122	89406
		AT-621		...	...	O|O	83122	89406
		HU9Z18125B		...	...	O|O	83122	89406
		HU9Z-18125-B		...	...	O|O	83122	89406

WINNEBAGO (CONT'D)

SUNOVA (cont'd)

Year Ano Année	Model Modelo Modle	OEM #	Front Fleetline	Front GasSLX	Rear Fleetline	Rear GasSLX
02-07	MotorHomes with Ford F53 Chassis with 16,000 lb GVW to 22,000 lb GVW	1C34-18045-AA	83209	89414	...	...
		1C34-18045-JA	83209	89414	...	...
		1C3418045AA	83209	89414	...	...
		1C3418045JA	83209	89414	...	...
		9U9Z18124A	83209	89414	...	...
		9U9Z-18124-A	83209	89414	...	...
		9U94-18045-AA	83209	89414	...	...
		9U9418045AA	83209	89414	...	...
		ASH294	83209	89414	...	...
		ASH1022	83209	89414	...	...
		ASH1205	83209	89414	...	...
		ASH1228	83209	89414	...	...
		ASH1229	83209	89414	...	...
		ASH25822	83209	89414	...	...
		ASH25823	83209	89414	...	...
		ASH-294	83209	89414	...	...
		ASH-1022	83209	89414	...	...
		ASH-1205	83209	89414	...	...
		ASH-1228	83209	89414	...	...
		ASH-1229	83209	89414	...	...
		ASH-25822	83209	89414	...	...
		ASH-25823	83209	89414	...	...
		AT620	83209	89414	...	...
		AT766	83209	89414	...	...
		AT-620	83209	89414	...	...
		AT-766	83209	89414	...	...
06-07	Motorhome Chassis with 20,500 lb GVW to 22,000 lb GVW	9U9Z18125A	...	...	83122	89406
		9U9Z-18125-A	...	...	83122	89406
		9U94-18080-AA	...	...	83122	89406
		9U9418080AA	...	...	83122	89406
		ASH137	...	...	83122	89406
		ASH1023	...	...	83122	89406
		ASH1206	...	...	83122	89406
		ASH1230	...	...	83122	89406
		ASH25824	...	...	83122	89406
		ASH-137	...	...	83122	89406
		ASH-1023	...	...	83122	89406
		ASH-1206	...	...	83122	89406
		ASH-1230	...	...	83122	89406
		ASH-25824	...	...	83122	89406
		AT621	...	...	83122	89406
		AT-621	...	...	83122	89406
		HU9Z18125B	...	...	83122	89406
		HU9Z-18125-B	...	...	83122	89406
16-17	Motorhome Chassis with 16,000 lb GVW to 18,000 lb GVW	9U9Z18125B	...	...	83122	89406
		9U9Z-18125-B	...	...	83122	89406
		ASH25825	...	...	83122	89406
		ASH-25825	...	...	83122	89406
16-17	Motorhome Chassis with 20,500 lb GVW to 22,000 lb GVW	9U9Z18125A	...	...	83122	89406
		9U9Z-18125-A	...	...	83122	89406
		9U94-18080-AA	...	...	83122	89406
		9U9418080AA	...	...	83122	89406
		ASH137	...	...	83122	89406
		ASH1023	...	...	83122	89406

WINNEBAGO (CONT'D)

SUNOVA (cont'd)

Year Ano Année	Model Modelo Modle	OEM #		Front			Rear	
				Fleetline	GasSLX		Fleetline	GasSLX
16-17	Motorhome Chassis with 20,500 lb GVW to 22,000 lb GVW	ASH1206		...	...	O|O	83122	89406
		ASH1230		...	...	O|O	83122	89406
		ASH25824		...	...	O|O	83122	89406
		ASH-137		...	...	O|O	83122	89406
		ASH-1023		...	...	O|O	83122	89406
		ASH-1206		...	...	O|O	83122	89406
		ASH-1230		...	...	O|O	83122	89406
		ASH-25824		...	...	O|O	83122	89406
		AT621		...	...	O|O	83122	89406
		AT-621		...	...	O|O	83122	89406
		HU9Z18125B		...	...	O|O	83122	89406
		HU9Z-18125-B		...	...	O|O	83122	89406
16-17	MotorHomes with Ford F53 Chassis with 16,000 lb GVW to 22,000 lb GVW	1C34-18045-AA	O|O	83209	89414		...	...
		1C34-18045-JA	O|O	83209	89414		...	...
		1C3418045AA	O|O	83209	89414		...	...
		1C3418045JA	O|O	83209	89414		...	...
		9U9Z18124A	O|O	83209	89414		...	...
		9U9Z-18124-A	O|O	83209	89414		...	...
		9U94-18045-AA	O|O	83209	89414		...	...
		9U9418045AA	O|O	83209	89414		...	...
		ASH294	O|O	83209	89414		...	...
		ASH1022	O|O	83209	89414		...	...
		ASH1205	O|O	83209	89414		...	...
		ASH1228	O|O	83209	89414		...	...
		ASH1229	O|O	83209	89414		...	...
		ASH25822	O|O	83209	89414		...	...
		ASH25823	O|O	83209	89414		...	...
		ASH-294	O|O	83209	89414		...	...
		ASH-1022	O|O	83209	89414		...	...
		ASH-1205	O|O	83209	89414		...	...
		ASH-1228	O|O	83209	89414		...	...
		ASH-1229	O|O	83209	89414		...	...
		ASH-25822	O|O	83209	89414		...	...
		ASH-25823	O|O	83209	89414		...	...
		AT620	O|O	83209	89414		...	...
		AT766	O|O	83209	89414		...	...
		AT-620	O|O	83209	89414		...	...
		AT-766	O|O	83209	89414		...	...

SUNSTAR

02-04	Motorhome Chassis with 20,500 lb GVW to 22,000 lb GVW	9U9Z18125A		...	...	O|O	83122	89406
		9U9Z-18125-A		...	...	O|O	83122	89406
		9U94-18080-AA		...	...	O|O	83122	89406
		9U9418080AA		...	...	O|O	83122	89406
		ASH137		...	...	O|O	83122	89406
		ASH1023		...	...	O|O	83122	89406
		ASH1206		...	...	O|O	83122	89406
		ASH1230		...	...	O|O	83122	89406
		ASH25824		...	...	O|O	83122	89406
		ASH-137		...	...	O|O	83122	89406
		ASH-1023		...	...	O|O	83122	89406
		ASH-1206		...	...	O|O	83122	89406
		ASH-1230		...	...	O|O	83122	89406
		ASH-25824		...	...	O|O	83122	89406

WINNEBAGO (CONT'D)

SUNSTAR (cont'd)

Year Ano Année	Model Modelo Modle	OEM #		Front			Rear	
				Fleetline	GasSLX		Fleetline	GasSLX
02-04	Motorhome Chassis with 20,500 lb GVW to 22,000 lb GVW	AT621		...	...		83122	89406
		AT-621		...	...		83122	89406
		HU9Z18125B		...	...		83122	89406
		HU9Z-18125-B		...	...		83122	89406
02-04	MotorHomes with Ford F53 Chassis with 16,000 lb GVW to 22,000 lb GVW	1C34-18045-AA		83209	89414		...	...
		1C34-18045-JA		83209	89414		...	...
		1C3418045AA		83209	89414		...	...
		1C3418045JA		83209	89414		...	...
		9U9Z18124A		83209	89414		...	...
		9U9Z-18124-A		83209	89414		...	...
		9U94-18045-AA		83209	89414		...	...
		9U9418045AA		83209	89414		...	...
		ASH294		83209	89414		...	...
		ASH1022		83209	89414		...	...
		ASH1205		83209	89414		...	...
		ASH1228		83209	89414		...	...
		ASH1229		83209	89414		...	...
		ASH25822		83209	89414		...	...
		ASH25823		83209	89414		...	...
		ASH-294		83209	89414		...	...
		ASH-1022		83209	89414		...	...
		ASH-1205		83209	89414		...	...
		ASH-1228		83209	89414		...	...
		ASH-1229		83209	89414		...	...
		ASH-25822		83209	89414		...	...
		ASH-25823		83209	89414		...	...
		AT620		83209	89414		...	...
		AT766		83209	89414		...	...
		AT-620		83209	89414		...	...
		AT-766		83209	89414		...	...
16-21	Motorhome Chassis with 16,000 lb GVW to 18,000 lb GVW	9U9Z18125B		...	...		83122	89406
		9U9Z-18125-B		...	...		83122	89406
		ASH25825		...	...		83122	89406
		ASH-25825		...	...		83122	89406
16-21	Motorhome Chassis with 20,500 lb GVW to 22,000 lb GVW	9U9Z18125A		...	...		83122	89406
		9U9Z-18125-A		...	...		83122	89406
		9U94-18080-AA		...	...		83122	89406
		9U9418080AA		...	...		83122	89406
		ASH137		...	...		83122	89406
		ASH1023		...	...		83122	89406
		ASH1206		...	...		83122	89406
		ASH1230		...	...		83122	89406
		ASH25824		...	...		83122	89406
		ASH-137		...	...		83122	89406
		ASH-1023		...	...		83122	89406
		ASH-1206		...	...		83122	89406
		ASH-1230		...	...		83122	89406
		ASH-25824		...	...		83122	89406
		AT621		...	...		83122	89406
		AT-621		...	...		83122	89406
		HU9Z18125B		...	...		83122	89406
		HU9Z-18125-B		...	...		83122	89406
16-22	MotorHomes with Ford F53 Chassis with 16,000 lb GVW to 22,000 lb GVW	1C34-18045-AA		83209	89414		...	...
		1C34-18045-JA		83209	89414		...	...

WINNEBAGO (CONT'D)

SUNSTAR (cont'd)

Year Ano Année	Model Modelo Modle	OEM #		Front Fleetline	Front GasSLX		Rear Fleetline	Rear GasSLX
16-22	MotorHomes with Ford F53 Chassis with 16,000 lb GVW to 22,000 lb GVW	1C3418045AA	O|O	83209	89414		...	...
		1C3418045JA	O|O	83209	89414		...	...
		9U9Z18124A	O|O	83209	89414		...	...
		9U9Z-18124-A	O|O	83209	89414		...	...
		9U94-18045-AA	O|O	83209	89414		...	...
		9U9418045AA	O|O	83209	89414		...	...
		ASH294	O|O	83209	89414		...	...
		ASH1022	O|O	83209	89414		...	...
		ASH1205	O|O	83209	89414		...	...
		ASH1228	O|O	83209	89414		...	...
		ASH1229	O|O	83209	89414		...	...
		ASH25822	O|O	83209	89414		...	...
		ASH25823	O|O	83209	89414		...	...
		ASH-294	O|O	83209	89414		...	...
		ASH-1022	O|O	83209	89414		...	...
		ASH-1205	O|O	83209	89414		...	...
		ASH-1228	O|O	83209	89414		...	...
		ASH-1229	O|O	83209	89414		...	...
		ASH-25822	O|O	83209	89414		...	...
		ASH-25823	O|O	83209	89414		...	...
		AT620	O|O	83209	89414		...	...
		AT766	O|O	83209	89414		...	...
		AT-620	O|O	83209	89414		...	...
		AT-766	O|O	83209	89414		...	...

SUNSTAR LX

Year Ano Année	Model Modelo Modle	OEM #		Front Fleetline	Front GasSLX		Rear Fleetline	Rear GasSLX
16-18	Motorhome Chassis with 16,000 lb GVW to 18,000 lb GVW	9U9Z18125B		...	...	O|O	83122	89406
		9U9Z-18125-B		...	...	O|O	83122	89406
		ASH25825		...	...	O|O	83122	89406
		ASH-25825		...	...	O|O	83122	89406
16-18	Motorhome Chassis with 20,500 lb GVW to 22,000 lb GVW	9U9Z18125A		...	...	O|O	83122	89406
		9U9Z-18125-A		...	...	O|O	83122	89406
		9U94-18080-AA		...	...	O|O	83122	89406
		9U9418080AA		...	...	O|O	83122	89406
		ASH137		...	...	O|O	83122	89406
		ASH1023		...	...	O|O	83122	89406
		ASH1206		...	...	O|O	83122	89406
		ASH1230		...	...	O|O	83122	89406
		ASH25824		...	...	O|O	83122	89406
		ASH-137		...	...	O|O	83122	89406
		ASH-1023		...	...	O|O	83122	89406
		ASH-1206		...	...	O|O	83122	89406
		ASH-1230		...	...	O|O	83122	89406
		ASH-25824		...	...	O|O	83122	89406
		AT621		...	...	O|O	83122	89406
		AT-621		...	...	O|O	83122	89406
		HU9Z18125B		...	...	O|O	83122	89406
		HU9Z-18125-B		...	...	O|O	83122	89406
16-18	MotorHomes with Ford F53 Chassis with 16,000 lb GVW to 22,000 lb GVW	ASH1022	O|O	83209	89414		...	...
		ASH1205	O|O	83209	89414		...	...
		ASH1228	O|O	83209	89414		...	...
		ASH1229	O|O	83209	89414		...	...
		ASH25822	O|O	83209	89414		...	...
		ASH25823	O|O	83209	89414		...	...

Year Ano Année	Model Modelo Modle	OEM #		Front			Rear	
				Fleetline	GasSLX		Fleetline	GasSLX
WINNEBAGO (CONT'D)								
SUNSTAR LX (cont'd)								
16-18	MotorHomes with Ford F53 Chassis with 16,000 lb GVW to 22,000 lb GVW	ASH-1022	○|○	83209	89414		...	...
		ASH-1205	○|○	83209	89414		...	...
		ASH-1228	○|○	83209	89414		...	...
		ASH-1229	○|○	83209	89414		...	...
		ASH-25822	○|○	83209	89414		...	...
		ASH-25823	○|○	83209	89414		...	...
TOUR								
2006	MotorHomes with Freightliner XC Chassis and ADL200 Suspension w/ 20K Rear	16-16736-000		...	...	○|○	85029	...
		16-16873-000		...	...	○|○	85029	...
		1616736000		...	...	○|○	85029	...
		1616873000		...	...	○|○	85029	...
		141700131809		...	...	○|○	85029	...
2006	MotorHomes with Freightliner XC Chassis and AS120 Front Suspension	16-16737-000	○|○	83160	...		...	...
		16-16874-000	○|○	83160	...		...	...
		1616737000	○|○	83160	...		...	...
		1616874000	○|○	83160	...		...	...
		141700131810	○|○	83160	...		...	...
VECTRA								
2006	MotorHomes with Freightliner XC Chassis and ADL200 Suspension w/ 20K Rear	16-16736-000		...	...	○|○	85029	...
		16-16873-000		...	...	○|○	85029	...
		1616736000		...	...	○|○	85029	...
		1616873000		...	...	○|○	85029	...
		141700131809		...	...	○|○	85029	...
2006	MotorHomes with Freightliner XC Chassis and AS120 Front Suspension	16-16737-000	○|○	83160	...		...	...
		16-16874-000	○|○	83160	...		...	...
		1616737000	○|○	83160	...		...	...
		1616874000	○|○	83160	...		...	...
		141700131810	○|○	83160	...		...	...
VISTA								
02-04	Motorhome Chassis with 20,500 lb GVW to 22,000 lb GVW	9U9Z18125A		...	...	○|○	83122	89406
		9U9Z-18125-A		...	...	○|○	83122	89406
		9U94-18080-AA		...	...	○|○	83122	89406
		9U9418080AA		...	...	○|○	83122	89406
		ASH137		...	...	○|○	83122	89406
		ASH1023		...	...	○|○	83122	89406
		ASH1206		...	...	○|○	83122	89406
		ASH1230		...	...	○|○	83122	89406
		ASH25824		...	...	○|○	83122	89406
		ASH-137		...	...	○|○	83122	89406
		ASH-1023		...	...	○|○	83122	89406
		ASH-1206		...	...	○|○	83122	89406
		ASH-1230		...	...	○|○	83122	89406
		ASH-25824		...	...	○|○	83122	89406
		AT621		...	...	○|○	83122	89406
		AT-621		...	...	○|○	83122	89406
		HU9Z18125B		...	...	○|○	83122	89406
		HU9Z-18125-B		...	...	○|○	83122	89406
02-04	MotorHomes with Ford F53 Chassis with 16,000 lb GVW to 22,000 lb GVW	1C34-18045-AA	○|○	83209	89414		...	...
		1C34-18045-JA	○|○	83209	89414		...	...
		1C3418045AA	○|○	83209	89414		...	...

WINNEBAGO (CONT'D)

VISTA (cont'd)

Year Ano Année	Model Modelo Modle	OEM #	Front Fleetline	Front GasSLX	Rear Fleetline	Rear GasSLX
02-04	MotorHomes with Ford F53 Chassis with 16,000 lb GVW to 22,000 lb GVW	1C3418045JA	83209	89414	...	...
		9U9Z18124A	83209	89414	...	...
		9U9Z-18124-A	83209	89414	...	...
		9U94-18045-AA	83209	89414	...	...
		9U9418045AA	83209	89414	...	...
		ASH294	83209	89414	...	...
		ASH1022	83209	89414	...	...
		ASH1205	83209	89414	...	...
		ASH1228	83209	89414	...	...
		ASH1229	83209	89414	...	...
		ASH25822	83209	89414	...	...
		ASH25823	83209	89414	...	...
		ASH-294	83209	89414	...	...
		ASH-1022	83209	89414	...	...
		ASH-1205	83209	89414	...	...
		ASH-1228	83209	89414	...	...
		ASH-1229	83209	89414	...	...
		ASH-25822	83209	89414	...	...
		ASH-25823	83209	89414	...	...
		AT620	83209	89414	...	...
		AT766	83209	89414	...	...
		AT-620	83209	89414	...	...
		AT-766	83209	89414	...	...
07-09	Motorhome Chassis with 20,500 lb GVW to 22,000 lb GVW	9U9Z18125A	...	...	83122	89406
		9U9Z-18125-A	...	...	83122	89406
		9U94-18080-AA	...	...	83122	89406
		9U9418080AA	...	...	83122	89406
		ASH137	...	...	83122	89406
		ASH1023	...	...	83122	89406
		ASH1206	...	...	83122	89406
		ASH1230	...	...	83122	89406
		ASH25824	...	...	83122	89406
		ASH-137	...	...	83122	89406
		ASH-1023	...	...	83122	89406
		ASH-1206	...	...	83122	89406
		ASH-1230	...	...	83122	89406
		ASH-25824	...	...	83122	89406
		AT621	...	...	83122	89406
		AT-621	...	...	83122	89406
		HU9Z18125B	...	...	83122	89406
		HU9Z-18125-B	...	...	83122	89406
08-09	Motorhome Chassis with 16,000 lb GVW to 18,000 lb GVW	9U9Z18125B	...	...	83122	89406
		9U9Z-18125-B	...	...	83122	89406
		ASH25825	...	...	83122	89406
		ASH-25825	...	...	83122	89406
11-21	Motorhome Chassis with 16,000 lb GVW to 18,000 lb GVW	9U9Z18125B	...	...	83122	89406
		9U9Z-18125-B	...	...	83122	89406
		ASH25825	...	...	83122	89406
		ASH-25825	...	...	83122	89406
11-21	Motorhome Chassis with 20,500 lb GVW to 22,000 lb GVW	9U9Z18125A	...	...	83122	89406
		9U9Z-18125-A	...	...	83122	89406
		9U94-18080-AA	...	...	83122	89406
		9U9418080AA	...	...	83122	89406
		ASH137	...	...	83122	89406

Year Ano Année	Model Modelo Modle	OEM #		Front			Rear	
				Fleetline	GasSLX		Fleetline	GasSLX
WINNEBAGO (CONT'D)								
VISTA (cont'd)								
11-21	Motorhome Chassis with 20,500 lb GVW to 22,000 lb GVW	ASH1023		...	...	O|O	83122	89406
		ASH1206		...	...	O|O	83122	89406
		ASH1230		...	...	O|O	83122	89406
		ASH25824		...	...	O|O	83122	89406
		ASH-137		...	...	O|O	83122	89406
		ASH-1023		...	...	O|O	83122	89406
		ASH-1206		...	...	O|O	83122	89406
		ASH-1230		...	...	O|O	83122	89406
		ASH-25824		...	...	O|O	83122	89406
		AT621		...	...	O|O	83122	89406
		AT-621		...	...	O|O	83122	89406
		HU9Z18125B		...	...	O|O	83122	89406
		HU9Z-18125-B		...	...	O|O	83122	89406
07-22	MotorHomes with Ford F53 Chassis with 16,000 lb GVW to 22,000 lb GVW	1C34-18045-AA	O|O	83209	89414		...	...
		1C34-18045-JA	O|O	83209	89414		...	...
		1C3418045AA	O|O	83209	89414		...	...
		1C3418045JA	O|O	83209	89414		...	...
		9U9Z18124A	O|O	83209	89414		...	...
		9U9Z-18124-A	O|O	83209	89414		...	...
		9U94-18045-AA	O|O	83209	89414		...	...
		9U9418045AA	O|O	83209	89414		...	...
		ASH294	O|O	83209	89414		...	...
		ASH1022	O|O	83209	89414		...	...
		ASH1205	O|O	83209	89414		...	...
		ASH1228	O|O	83209	89414		...	...
		ASH1229	O|O	83209	89414		...	...
		ASH25822	O|O	83209	89414		...	...
		ASH25823	O|O	83209	89414		...	...
		ASH-294	O|O	83209	89414		...	...
		ASH-1022	O|O	83209	89414		...	...
		ASH-1205	O|O	83209	89414		...	...
		ASH-1228	O|O	83209	89414		...	...
		ASH-1229	O|O	83209	89414		...	...
		ASH-25822	O|O	83209	89414		...	...
		ASH-25823	O|O	83209	89414		...	...
		AT620	O|O	83209	89414		...	...
		AT766	O|O	83209	89414		...	...
		AT-620	O|O	83209	89414		...	...
		AT-766	O|O	83209	89414		...	...
VISTA LX								
16-18	Motorhome Chassis with 16,000 lb GVW to 18,000 lb GVW	9U9Z18125B		...	...	O|O	83122	89406
		9U9Z-18125-B		...	...	O|O	83122	89406
		ASH25825		...	...	O|O	83122	89406
		ASH-25825		...	...	O|O	83122	89406
16-18	Motorhome Chassis with 20,500 lb GVW to 22,000 lb GVW	9U9Z18125A		...	...	O|O	83122	89406
		9U9Z-18125-A		...	...	O|O	83122	89406
		9U94-18080-AA		...	...	O|O	83122	89406
		9U9418080AA		...	...	O|O	83122	89406
		ASH137		...	...	O|O	83122	89406
		ASH1023		...	...	O|O	83122	89406
		ASH1206		...	...	O|O	83122	89406
		ASH1230		...	...	O|O	83122	89406
		ASH25824		...	...	O|O	83122	89406

Year Ano Année	Model Modelo Modle	OEM #		Front			Rear	
				Fleetline	GasSLX		Fleetline	GasSLX
WINNEBAGO (CONT'D)								
VISTA LX (cont'd)								
16-18	Motorhome Chassis with 20,500 lb GVW to 22,000 lb GVW	ASH-137		...	...		83122	89406
		ASH-1023		...	...		83122	89406
		ASH-1206		...	...		83122	89406
		ASH-1230		...	...		83122	89406
		ASH-25824		...	...		83122	89406
		AT621		...	...		83122	89406
		AT-621		...	...		83122	89406
		HU9Z18125B		...	...		83122	89406
		HU9Z-18125-B		...	...		83122	89406
16-18	MotorHomes with Ford F53 Chassis with 16,000 lb GVW to 22,000 lb GVW	ASH1022		83209	89414		...	...
		ASH1205		83209	89414		...	...
		ASH1228		83209	89414		...	...
		ASH1229		83209	89414		...	...
		ASH25822		83209	89414		...	...
		ASH25823		83209	89414		...	...
		ASH-1022		83209	89414		...	...
		ASH-1205		83209	89414		...	...
		ASH-1228		83209	89414		...	...
		ASH-1229		83209	89414		...	...
		ASH-25822		83209	89414		...	...
		ASH-25823		83209	89414		...	...
ASPECT								
18-20	MotorHomes with Ford E350 or E450 Chassis	8C2Z18124D		G63622	...		...	...
		8C2Z18125D		...	...		G63623	...
		8C2Z-18124-D		G63622	...		...	...
		8C2Z-18125-D		...	...		G63623	...
		8C24-18045-DA		G63622	...		...	...
		8C24-18080-DB		...	...		G63623	...
		8C2418045DA		G63622	...		...	...
		8C2418080DB		...	...		G63623	...
		ASH1136		...	...		G63623	...
		ASH1154		G63622	...		...	...
		ASH-1136		...	...		G63623	...
		ASH-1154		G63622	...		...	...
		AT163G		G63622	...		...	...
		AT164G		...	...		G63623	...
		AT-163G		G63622	...		...	...
		AT-164G		...	...		G63623	...
CAMBRIA								
09-15	MotorHomes with Ford E350 or E450 Chassis	8C2Z18124D		G63622	...		...	...
		8C2Z18125D		...	...		G63623	...
		8C2Z-18124-D		G63622	...		...	...
		8C2Z-18125-D		...	...		G63623	...
		8C24-18045-DA		G63622	...		...	...
		8C24-18080-DB		...	...		G63623	...
		8C2418045DA		G63622	...		...	...
		8C2418080DB		...	...		G63623	...
		ASH1136		...	...		G63623	...
		ASH1154		G63622	...		...	...
		ASH-1136		...	...		G63623	...
		ASH-1154		G63622	...		...	...
		AT163G		G63622	...		...	...

WINNEBAGO (CONT'D)

CAMBRIA (cont'd)

Year Ano Année	Model Modelo Modle	OEM #		Front			Rear	
				Fleetline	GasSLX		Fleetline	GasSLX
09-15	MotorHomes with Ford E350 or E450 Chassis	AT164G		...	...	–|o	G63623	...
		AT-163G	–|o	G63622	...		...	...
		AT-164G		...	...	–|o	G63623	...
18-20	MotorHomes with Ford E350 or E450 Chassis	8C2Z18124D	–|o	G63622	...		...	...
		8C2Z18125D		...	...	–|o	G63623	...
		8C2Z-18124-D	–|o	G63622	...		...	...
		8C2Z-18125-D		...	...	–|o	G63623	...
		8C24-18045-DA	–|o	G63622	...		...	...
		8C24-18080-DB		...	...	–|o	G63623	...
		8C2418045DA	–|o	G63622	...		...	...
		8C2418080DB		...	...	–|o	G63623	...
		ASH1136		...	...	–|o	G63623	...
		ASH1154	–|o	G63622	...		...	...
		ASH-1136		...	...	–|o	G63623	...
		ASH-1154	–|o	G63622	...		...	...
		AT163G	–|o	G63622	...		...	...
		AT164G		...	...	–|o	G63623	...
		AT-163G	–|o	G63622	...		...	...
		AT-164G		...	...	–|o	G63623	...

CLASS A MOTORHOMES

03-06	Journey Series MotorHomes with Freightliner XC Chassis	16-18103-000	–|–	85900	...		...	...
		1618103000	–|–	85900	...		...	...
		481700000493	–|–	85900	...		...	...
04-06	Vetra Series MotorHomes with Freightliner XC Chassis	16-18103-000	–|–	85900	...		...	...
		1618103000	–|–	85900	...		...	...
		481700000493	–|–	85900	...		...	...
03-10	Adventurer Series MotorHomes with Workhorse W22, & W24 MotorHome Chassis with O.E.M. Number	24-153249	o|o	85125	...		...	...
		24-186629	o|o	85125	...		...	...
		24153249	o|o	85125	...		...	...
		24186629	o|o	85125	...		...	...
		F4BE5A832MO	o|o	85125	...		...	...
		F4BE5B492HO	o|o	85125	...		...	...
		F4BE5F324HO	o|o	85125	...		...	...
		F4-BE5-A832-MO	o|o	85125	...		...	...
		F4-BE5-B492-HO	o|o	85125	...		...	...
		F4-BE5-F324-HO	o|o	85125	...		...	...
		W0005662	o|o	85125	...		...	...
		W0006254	o|o	85125	...		...	...
11-20	Sightseer Series MotorHomes with Ford F53 Chassis with 16,000 lb GVW to 22,000 lb GVW	ASH-1229	o|o	83209	89414		...	...
		ASH-25822	o|o	83209	89414		...	...
		ASH-25823	o|o	83209	89414		...	...
11-20	Sunova Series MotorHomes with Ford F53 Chassis with 16,000 lb GVW to 22,000 lb GVW	ASH-1229	o|o	83209	89414		...	...
		ASH-25822	o|o	83209	89414		...	...
		ASH-25823	o|o	83209	89414		...	...
11-20	SunStar & SunStar LX Series MotorHomes with Ford F53 Chassis with 16,000 lb GVW to 22,000 lb GVW	ASH-1229	o|o	83209	89414		...	...
		ASH-25822	o|o	83209	89414		...	...
		ASH-25823	o|o	83209	89414		...	...
11-20	Vista & Vista LX Series MotorHomes with Ford F53 Chassis with 16,000 lb GVW to 22,000 lb GVW	ASH-1229	o|o	83209	89414		...	...
		ASH-25822	o|o	83209	89414		...	...
		ASH-25823	o|o	83209	89414		...	...

WINNEBAGO (CONT'D)

CLASS A MOTORHOMES (cont'd)

Year Ano Année	Model Modelo Modle	OEM #		Front Fleetline	Front GasSLX		Rear Fleetline	Rear GasSLX
18-20	Intent Series MotorHomes with Ford F53 Chassis with 16,000 lb GVW to 22,000 lb GVW	ASH-1229	o|o	**83209**	89414		...	...
		ASH-25822	o|o	**83209**	89414		...	...
		ASH-25823	o|o	**83209**	89414		...	...
99-20	Adventurer Series MotorHomes with Ford F53 Chassis with 16,000 lb GVW to 22,000 lb GVW	1C34-18045-AA	o|o	**83209**	89414		...	...
		1C34-18045-JA	o|o	**83209**	89414		...	...
		9U9Z-18124-A	o|o	**83209**	89414		...	...
		9U94-18045-AA	o|o	**83209**	89414		...	...
		ASH-294	o|o	**83209**	89414		...	...
		ASH-1022	o|o	**83209**	89414		...	...
		ASH-1205	o|o	**83209**	89414		...	...
		ASH-1228	o|o	**83209**	89414		...	...
		ASH-1229	o|o	**83209**	89414		...	...
		ASH-25822	o|o	**83209**	89414		...	...
		ASH-25823	o|o	**83209**	89414		...	...
		AT-620	o|o	**83209**	89414		...	...
		AT-766	o|o	**83209**	89414		...	...
2006	Tour Series MotorHomes with Freightliner XC Chassis	16-18103-000	–|–	**85900**	...		...	...
		1618103000	–|–	**85900**	...		...	...
		481700000493	–|–	**85900**	...		...	...
	Models with Workhorse UFO Chassis with Hendrickson Softek Front Suspension	66153-002	o|o	**83124**	89407		...	...
		66153002	o|o	**83124**	89407		...	...
		F4BE5C832MO	o|o	**83124**	89407		...	...
		F4-BE5-C832-MO	o|o	**83124**	89407		...	...

MINNIE

06-20	MotorHomes with Ford E350 or E450 Chassis	8C2Z18124D	–|o	**G63622**	...		...	...
		8C2Z18125D		...	...	–|o	**G63623**	...
		8C2Z-18124-D	–|o	**G63622**	...		...	...
		8C2Z-18125-D		...	...	–|o	**G63623**	...
		8C24-18045-DA	–|o	**G63622**	...		...	...
		8C24-18080-DB		...	...	–|o	**G63623**	...
		8C2418045DA	–|o	**G63622**	...		...	...
		8C2418080DB		...	...	–|o	**G63623**	...
		ASH1136		...	...	–|o	**G63623**	...
		ASH1154	–|o	**G63622**	...		...	...
		ASH-1136		...	...	–|o	**G63623**	...
		ASH-1154	–|o	**G63622**	...		...	...
		AT163G	–|o	**G63622**	...		...	...
		AT164G		...	...	–|o	**G63623**	...
		AT-163G	–|o	**G63622**	...		...	...
		AT-164G		...	...	–|o	**G63623**	...
1999	MotorHomes with Ford E350 or E450 Chassis	8C2Z18124D	–|o	**G63622**	...		...	...
		8C2Z18125D		...	...	–|o	**G63623**	...
		8C2Z-18124-D	–|o	**G63622**	...		...	...
		8C2Z-18125-D		...	...	–|o	**G63623**	...
		8C24-18045-DA	–|o	**G63622**	...		...	...
		8C24-18080-DB		...	...	–|o	**G63623**	...
		8C2418045DA	–|o	**G63622**	...		...	...
		8C2418080DB		...	...	–|o	**G63623**	...
		ASH1136		...	...	–|o	**G63623**	...
		ASH1154	–|o	**G63622**	...		...	...
		ASH-1136		...	...	–|o	**G63623**	...

Year Ano Année	Model Modelo Modle	OEM #		Front			Rear	
				Fleetline	GasSLX		Fleetline	GasSLX
WINNEBAGO (CONT'D)								
MINNIE (cont'd)								
1999	MotorHomes with Ford E350 or E450 Chassis	ASH-1154	−|o	**G63622**	...		...	...
		AT163G	−|o	**G63622**	...		...	...
		AT164G		...	...	−|o	**G63623**	...
		AT-163G	−|o	**G63622**	...		...	...
		AT-164G		...	...	−|o	**G63623**	...
OUTLOOK								
11-18	MotorHomes with Ford E350 or E450 Chassis	8C2Z18124D	−|o	**G63622**	...		...	...
		8C2Z18125D		...	...	−|o	**G63623**	...
		8C2Z-18124-D	−|o	**G63622**	...		...	...
		8C2Z-18125-D		...	...	−|o	**G63623**	...
		8C24-18045-DA	−|o	**G63622**	...		...	...
		8C24-18080-DB		...	...	−|o	**G63623**	...
		8C2418045DA	−|o	**G63622**	...		...	...
		8C2418080DB		...	...	−|o	**G63623**	...
		ASH1136		...	...	−|o	**G63623**	...
		ASH1154	−|o	**G63622**	...		...	...
		ASH-1136		...	...	−|o	**G63623**	...
		ASH-1154	−|o	**G63622**	...		...	...
		AT163G	−|o	**G63622**	...		...	...
		AT164G		...	...	−|o	**G63623**	...
		AT-163G	−|o	**G63622**	...		...	...
		AT-164G		...	...	−|o	**G63623**	...
SPIRIT								
08-15	MotorHomes with Ford E350 or E450 Chassis	8C2Z18124D	−|o	**G63622**	...		...	...
		8C2Z18125D		...	...	−|o	**G63623**	...
		8C2Z-18124-D	−|o	**G63622**	...		...	...
		8C2Z-18125-D		...	...	−|o	**G63623**	...
		8C24-18045-DA	−|o	**G63622**	...		...	...
		8C24-18080-DB		...	...	−|o	**G63623**	...
		8C2418045DA	−|o	**G63622**	...		...	...
		8C2418080DB		...	...	−|o	**G63623**	...
		ASH1136		...	...	−|o	**G63623**	...
		ASH1154	−|o	**G63622**	...		...	...
		ASH-1136		...	...	−|o	**G63623**	...
		ASH-1154	−|o	**G63622**	...		...	...
		AT163G	−|o	**G63622**	...		...	...
		AT164G		...	...	−|o	**G63623**	...
		AT-163G	−|o	**G63622**	...		...	...
		AT-164G		...	...	−|o	**G63623**	...
WORKHORSE								
W20								
01-09	...	24-153249	o|o	**85125**	...		...	...
		24-186629	o|o	**85125**	...		...	...
		F4-BE5-A832-MO	o|o	**85125**	...		...	...
		F4-BE5-B492-HO	o|o	**85125**	...		...	...
		F4-BE5-F324-HO	o|o	**85125**	...		...	...
		W0005662	o|o	**85125**	...		...	...
		W0006254	o|o	**85125**	...		...	...
04-09	Models with O.E.M. Number	24-153256		...	...	−|−	**85124**	...
		F4-BE5-F325-HO		...	...	−|−	**85124**	...

Year Ano Année	Model Modelo Modle	OEM #		Front			Rear	
				Fleetline	GasSLX		Fleetline	GasSLX
WORKHORSE (CONT'D)								
W20 (cont'd)								
04-09	Models with O.E.M. Number	W0005663		...	...	–|–	85124	...
W22								
01-09	...	24-153249	o|o	85125	...		...	...
		24-186629	o|o	85125	...		...	...
		F4-BE5-A832-MO	o|o	85125	...		...	...
		F4-BE5-B492-HO	o|o	85125	...		...	...
		F4-BE5-F324-HO	o|o	85125	...		...	...
		W0005662	o|o	85125	...		...	...
		W0006254	o|o	85125	...		...	...
04-09	Models with O.E.M. Number	24-153256		...	...	–|–	85124	...
		F4-BE5-F325-HO		...	...	–|–	85124	...
		W0005663		...	...	–|–	85124	...
W24								
04-09	...	24-153249	o|o	85125	...		...	...
		24-186629	o|o	85125	...		...	...
		F4-BE5-A832-MO	o|o	85125	...		...	...
		F4-BE5-B492-HO	o|o	85125	...		...	...
		F4-BE5-F324-HO	o|o	85125	...		...	...
		W0005662	o|o	85125	...		...	...
		W0006254	o|o	85125	...		...	...
04-09	Models with O.E.M. Number	24-153256		...	...	–|–	85124	...
		F4-BE5-F325-HO		...	...	–|–	85124	...
		W0005663		...	...	–|–	85124	...
98-11	W20 , W22, & W24 MotorHome Chassis with O.E.M. Number	24-153249	o|o	85125	...		...	...
		24-186629	o|o	85125	...		...	...
		24153249	o|o	85125	...		...	...
		24186629	o|o	85125	...		...	...
		F4BE5A832MO	o|o	85125	...		...	...
		F4BE5B492HO	o|o	85125	...		...	...
		F4BE5F324HO	o|o	85125	...		...	...
		F4-BE5-A832-MO	o|o	85125	...		...	...
		F4-BE5-B492-HO	o|o	85125	...		...	...
		F4-BE5-F324-HO	o|o	85125	...		...	...
		W0005662	o|o	85125	...		...	...
		W0006254	o|o	85125	...		...	...
	Models with O.E.M. Number	659223		...	...	o|o	G63866	...
		680672		...	...	o|o	85919	...
		W0011635	o|o	83221	...		...	...
		W0011636		...	...	o|o	G63366	...
	Models with RSAS Rear Suspension	7805X1012		...	...	o|o	85919	...
		7805-X-1012		...	...	o|o	85919	...
	Step Van Models with O.E.M. Number	W0007365		...	...	o|o	G63866	...
	UFO Motorhome Chassis with Hendrickson Softek Front Suspension	66153-002	o|o	83124	89407		...	...
		66153002	o|o	83124	89407		...	...
		F4BE5C832MO	o|o	83124	89407		...	...
		F4-BE5-C832-MO	o|o	83124	89407		...	...
W20								
98-00	W20 , W22, & W24 MotorHome Chassis with O.E.M. Number	24-153249	o|o	85125	...		...	...
		24-186629	o|o	85125	...		...	...
		F4-BE5-A832-MO	o|o	85125	...		...	...
		F4-BE5-B492-HO	o|o	85125	...		...	...

Year Ano Année	Model Modelo Modle	OEM #		Front			Rear	
				Fleetline	GasSLX		Fleetline	GasSLX
WORKHORSE (CONT'D)								
W20 (cont'd)								
98-00	W20 , W22, & W24 MotorHome Chassis with O.E.M. Number	F4-BE5-F324-HO	O|O	**85125**	...		...	...
		W0005662	O|O	**85125**	...		...	...
		W0006254	O|O	**85125**	...		...	...
10-11	W20 , W22, & W24 MotorHome Chassis with O.E.M. Number	24-153249	O|O	**85125**	...		...	...
		24-186629	O|O	**85125**	...		...	...
		F4-BE5-A832-MO	O|O	**85125**	...		...	...
		F4-BE5-B492-HO	O|O	**85125**	...		...	...
		F4-BE5-F324-HO	O|O	**85125**	...		...	...
		W0005662	O|O	**85125**	...		...	...
		W0006254	O|O	**85125**	...		...	...
W22								
98-00	W20 , W22, & W24 MotorHome Chassis with O.E.M. Number	24-153249	O|O	**85125**	...		...	...
		24-186629	O|O	**85125**	...		...	...
		F4-BE5-A832-MO	O|O	**85125**	...		...	...
		F4-BE5-B492-HO	O|O	**85125**	...		...	...
		F4-BE5-F324-HO	O|O	**85125**	...		...	...
		W0005662	O|O	**85125**	...		...	...
		W0006254	O|O	**85125**	...		...	...
10-14	W20 , W22, & W24 MotorHome Chassis with O.E.M. Number	24-153249	O|O	**85125**	...		...	...
		24-186629	O|O	**85125**	...		...	...
		F4-BE5-A832-MO	O|O	**85125**	...		...	...
		F4-BE5-B492-HO	O|O	**85125**	...		...	...
		F4-BE5-F324-HO	O|O	**85125**	...		...	...
		W0005662	O|O	**85125**	...		...	...
		W0006254	O|O	**85125**	...		...	...
W24								
98-03	W20 , W22, & W24 MotorHome Chassis with O.E.M. Number	24-153249	O|O	**85125**	...		...	...
		24-186629	O|O	**85125**	...		...	...
		F4-BE5-A832-MO	O|O	**85125**	...		...	...
		F4-BE5-B492-HO	O|O	**85125**	...		...	...
		F4-BE5-F324-HO	O|O	**85125**	...		...	...
		W0005662	O|O	**85125**	...		...	...
		W0006254	O|O	**85125**	...		...	...
10-11	W20 , W22, & W24 MotorHome Chassis with O.E.M. Number	24-153249	O|O	**85125**	...		...	...
		24-186629	O|O	**85125**	...		...	...
		F4-BE5-A832-MO	O|O	**85125**	...		...	...
		F4-BE5-B492-HO	O|O	**85125**	...		...	...
		F4-BE5-F324-HO	O|O	**85125**	...		...	...
		W0005662	O|O	**85125**	...		...	...
		W0006254	O|O	**85125**	...		...	...
WORLD TRANS BUS CO.								
	E & G Series Commercial buses on Ford E350 or E450 Chassis	ASH1136		...	...	–|O	**G63623**	...
		ASH1154	–|O	**G63622**	...		...	...
		ASH-1136		...	...	–|O	**G63623**	...
		ASH-1154	–|O	**G63622**	...		...	...
XOS TRUCK COMPANY								
ADDITIONAL O.E.M. INTERCHANGES								
	Medium Duty Electric Trucks with Hendrickson Softek Suspension (10K Capacity)	58913-009	O|O	**85959**	...		...	...

XOS TRUCK COMPANY (CONT'D)

ADDITIONAL O.E.M. INTERCHANGES (cont'd)

Year Ano Année	Model Modelo Modle	OEM #		Front			Rear	
				Fleetline	GasSLX		Fleetline	GasSLX
	Medium Duty Electric Trucks with Hendrickson Softek Suspension (10K Capacity)	58913-009L	○|○	**85959**	...		...	...
		58913009	○|○	**85959**	...		...	...
		58913009L	○|○	**85959**	...		...	...
	Medium Duty Trucks With Hendrickson HTS Suspension (16K Capacity)	60665-025		...	...	○|○	**85036**	**89405**
		60665-025L		...	...	○|○	**85036**	**89405**
		60665025		...	...	○|○	**85036**	**89405**
		60665025L		...	...	○|○	**85036**	**89405**

NUMERICAL LISTING
LISTA NUMÉRICA
LISTE NUMÉRIQUE

GABRIEL PART #	APPLICATION	POP CODE	MTG ACC PKG #
632147	CHALLENGE COOK	W	Not Req'd.
	LINK MANUFACTURING LTD.		
	MC NEILUS TRUCK & MAN.		
	WATSON & CHALIN MFG. INC.		
646155	ADVANCE MIXER	A	Not Req'd.
	CHALLENGE COOK		
	GRANNING SUSPENSION		
	HENDRICKSON TRAILER SUSPENSION		
	HENDRICKSON TRUCK SUSPENSION		
	KIMBLE MIXER CO		
	LINK MANUFACTURING LTD.		
	LONDON MIXER		
	MC NEILUS TRUCK & MAN.		
	REX MIXER		
	RIDEWELL CORPORATION		
	SAF HOLLAND		
	SUSPENSIONS INC.		
	TEREX CORPORATION		
	TUTHILL TECHNOLOGIES		
	VOLVO		
	WATSON & CHALIN MFG. INC.		
646177	CHALLENGE COOK	A	Not Req'd.
	KENWORTH		
	LINK MANUFACTURING LTD.		
	OSHKOSH MOTORS		
	PETERBILT		
	PIERCE MANUFACTURING INC.		
	SAF HOLLAND		
	SPRING VALLEY		
	WATSON & CHALIN MFG. INC.		
	WESTPORT AXLE CORP.		
665472	INGERSALL MACHINE	W	Not Req'd.
665937	CRANE CARRIER	C	Not Req'd.
	LINK MANUFACTURING LTD.		
	REYCO SUSPENSION		
	RIDEWELL CORPORATION		
83001	FREIGHTLINER	B	Not Req'd.
83002	KENWORTH	C	Not Req'd.
	LINK MANUFACTURING LTD.		
83003	MACK	W	140455(1)
83004	VOLVO	W	Not Req'd.
83005	INTERNATIONAL	W	140455(1)
	LINK MANUFACTURING		

GABRIEL PART #	APPLICATION	POP CODE	MTG ACC PKG #
83006	FREIGHTLINER	W	Not Req'd.
83007	MACK	W	140702(1)
83008	PETERBILT	A	Not Req'd.
83009	FREIGHTLINER	B	Not Req'd.
	MC NEILUS TRUCK & MAN.		
	OSHKOSH MOTORS		
	VOLVO		
83010	WESTERN STAR	X	Not Req'd.
83011	KENWORTH	W	Not Req'd.
	PETERBILT		
83012	KENWORTH	W	Not Req'd.
	PETERBILT		
83013	INTERNATIONAL	W	Not Req'd.
	LINK MANUFACTURING		
83015	INTERNATIONAL	W	140455(1)
83016	CHEVROLET	W	Not Req'd.
	FORD		
	FREIGHTLINER		
	GMC		
	INTERNATIONAL		
	KENWORTH		
	LINK MANUFACTURING LTD.		
	MACK		
	PETERBILT		
	VOLVO		
	WESTERN STAR		
83017	FREIGHTLINER	W	Not Req'd.
83018	MACK	W	140780(1)
83019	MACK	W	140780(1)
	VOLVO		
83021	CHEVROLET	C	Not Req'd.
	CNH Global NV		
	FREIGHTLINER		
	GMC		
	INTERNATIONAL		
	KENWORTH		
	LINK MANUFACTURING LTD.		
	MARMON		
	OSHKOSH MOTORS		
	PETERBILT		
83022	CNH GLOBAL N V	W	Not Req'd.
	WESTERN STAR		

GABRIEL PART #	APPLICATION	POP CODE	MTG ACC PKG #
83023	CHEVROLET	W	Not Req'd.
	FORD		
	FREIGHTLINER		
	GMC		
	INTERNATIONAL		
	KENWORTH		
	LINK MANUFACTURING LTD.		
	MACK		
	MACK		
	PETERBILT		
	VOLVO		
	WESTERN STAR		
83024	KENWORTH	W	Not Req'd.
	LINK MANUFACTURING LTD.		
	PETERBILT		
83025	FORD	C	Not Req'd.
	FREIGHTLINER		
	GMC		
	INTERNATIONAL		
	KENWORTH		
	LINK MANUFACTURING LTD.		
	PETERBILT		
	STERLING TRUCK		
83026	FREIGHTLINER	W	Not Req'd.
	WESTERN STAR		
83027	FREIGHTLINER	D	140126(1)
	WESTERN STAR		
83028	VOLVO	D	Not Req'd.
83029	VOLVO	D	Not Req'd.
83030	VOLVO	W	Not Req'd.
83031	KENWORTH	C	Not Req'd.
	LINK MANUFACTURING LTD.		
83034	FORD	W	Not Req'd.
	FREIGHTLINER		
	STERLING TRUCK		
83035	KENWORTH	C	Not Req'd.
	PETERBILT		
83038	FREIGHTLINER	A	Not Req'd.
83039	FREIGHTLINER	W	Not Req'd.
83040	FREIGHTLINER	W	Not Req'd.
83041	MACK	C	140780(1)
	VOLVO		
83042	KENWORTH	D	Not Req'd.
	PETERBILT		

NUMERICAL LISTING
LISTA NUMÉRICA
LISTE NUMÉRIQUE

GABRIEL PART #	APPLICATION	POP CODE	MTG ACC PKG #
83044	FREIGHTLINER	W	Not Req'd.
83045	MACK	D	140780(1)
	VOLVO		
83047	FREIGHTLINER	D	Not Req'd.
83048	VOLVO	C	Not Req'd.
83049	KENWORTH	D	Not Req'd.
	LINK MANUFACTURING LTD.		
	PETERBILT		
83050	MACK	W	140780(1)
	VOLVO		
83051	INTERNATIONAL	C	Not Req'd.
	LINK MANUFACTURING LTD.		
83053	INTERNATIONAL	W	Not Req'd.
	LINK MANUFACTURING LTD.		
83054	INTERNATIONAL	W	Not Req'd.
	LINK MANUFACTURING LTD.		
83056	KENWORTH	W	Not Req'd.
	LINK MANUFACTURING LTD.		
83059	KENWORTH	W	Not Req'd.
	PETERBILT		
	POWERPACKER		
83062	INTERNATIONAL	C	145128(1)
	LINK MANUFACTURING LTD.		
83065	WESTERN STAR	X	Not Req'd.
83066	MACK	W	Not Req'd.
83067	KENWORTH	X	Not Req'd.
	PETERBILT		
83081	KENWORTH	N	Not Req'd.
	PETERBILT		
83101	FORD	W	Not Req'd.
	IC CORPORATION		
	INTERNATIONAL		
	MACK		
	VOLVO		
83102	THOMAS SCHOOL BUS	W	145089-000(2)
83103	AUTOCAR LLC.	W	145054(2)
	INTERNATIONAL		
	MITSUBISHI-FUSO		
	MOR-RYDE SUSPENSION		
	VOLVO		
83105	MACK	W	140780(1)
	VOLVO		
83107	FORD	W	145080(2)
	STERLING TRUCK		

GABRIEL PART #	APPLICATION	POP CODE	MTG ACC PKG #
83109	FORD	W	145128(1)
	HENDRICKSON TRUCK SUSPENSION		
	MC NEILUS TRUCK & MAN.		
	STERLING TRUCK		
83110	HENDRICKSON TRUCK SUSPENSION	D	145128(1)
	MACK		
	VOLVO		
83111	HENDRICKSON TRUCK SUSPENSION	D	145128(1)
	MACK		
	VOLVO		
	WESTERN STAR		
83112	ADVANCE MIXER	C	145128(1)
	AUTOCAR LLC.		
	HENDRICKSON TRUCK SUSPENSION		
	INTERNATIONAL		
	MACK		
	MC NEILUS TRUCK & MAN.		
	PETERBILT		
	VOLVO		
	WESTERN STAR		
83113	SAF HOLLAND	X	Not Req'd.
	STOUGHTON TRAILERS INC.		
	TRAILMOBILE CANADA CORP.		
	WABASH NATIONAL		
83114	CHEVROLET	W	140780(1)
	GMC		
	INTERNATIONAL		
	ISUZU		
	UD NISSAN		
83118	FREIGHTLINER	X	Not Req'd.
	OSHKOSH MOTORS		
	UPS TRUCK		
83119	FREIGHTLINER	W	Not Req'd.
	OSHKOSH MOTORS		
83120	FREIGHTLINER	W	145089-000(1) & 145143(1)
	OSHKOSH MOTORS		
	STERLING TRUCK		
	THOMAS SCHOOL BUS		
	UPS TRUCK		
	VOLVO		

GABRIEL PART #	APPLICATION	POP CODE	MTG ACC PKG #
83122	ALLCO TRAILER	W	Not Req'd.
	AUTOCAR LLC.		
	CHEVROLET		
	COACHMEN		
	DAMON		
	ENTEGRA COACH		
	FLEETWOOD		
	FORD		
	FOREST RIVER		
	FREIGHTLINER		
	FRUEHAUF		
	GEORGIE BOY MANUFACTURING		
	GILLIG BROS.		
	GMC		
	GREAT DANE TRAILER		
	HENDRICKSON TRUCK SUSPENSION		
	HOLIDAY RAMBLER		
	ISUZU		
	ITASCA		
	JAYCO RV INC		
	KENWORTH		
	LODAL, INC.		
	MACK		
	MARMON		
	MC NEILUS TRUCK & MAN.		
	MONACO COACH		
	NATIONAL RV INC.		
	NEWMAR CORP		
	NEXUS RV		
	OSHKOSH MOTORS		
	PETERBILT		
	REYCO SUSPENSION		
	SAF HOLLAND		
	THOR MOTOR COACH		
	TUTHILL TECHNOLOGIES		
	VOLVO		
	WESTERN STAR		
	WINNEBAGO		

NUMERICAL LISTING
LISTA NUMÉRICA
LISTE NUMÉRIQUE

GABRIEL PART #	APPLICATION	POP CODE	MTG ACC PKG #
83123	FORD	D	Not Req'd.
	GILLIG BROS.		
	HENDRICKSON TRUCK SUSPENSION		
	IC CORPORATION		
	INTERNATIONAL		
	KENWORTH		
	MACK		
	MARMON		
	MC NEILUS TRUCK & MAN.		
	PETERBILT		
	REYCO SUSPENSION		
	SAF HOLLAND		
	TUTHILL TECHNOLOGIES		
	VOLVO		
	WATSON & CHALIN MFG. INC.		
83124	BENSON TRUCK BODIES INC.	C	Not Req'd.
	BLUE BIRD		
	COACHMEN		
	EAST MANUFACTURING CORP.		
	FOREST RIVER		
	GEORGIE BOY MANUFACTURING		
	ITASCA		
	KENWORTH		
	MONACO COACH		
	PETERBILT		
	SAF HOLLAND		
	TRAILMOBILE CANADA CORP.		
	TWIN COACH		
	VOLVO		
	WABASH NATIONAL		
	WINNEBAGO		
	WORKHORSE		

GABRIEL PART #	APPLICATION	POP CODE	MTG ACC PKG #
83125	CASCADE TRAILER	C	Not Req'd.
	EAST MANUFACTURING CORP.		
	FORD		
	GENERAL TRAILER CO		
	HENDRICKSON TRUCK SUSPENSION		
	HOLLAND - BINKLEY		
	MACK		
	PEERLESS TRAILER		
	SAF HOLLAND		
	STERLING TRUCK		
	THE BINKLEY COMPANY		
	TRAILMOBILE CANADA CORP.		
	VOLVO		
	WABASH NATIONAL		
	WATSON & CHALIN MFG. INC.		
83126	CHEVROLET	D	Not Req'd.
	FREIGHTLINER		
	GMC		
	HINO		
	INTERNATIONAL		
	KENWORTH		
	PETERBILT		
	REYCO SUSPENSION		
	SAF HOLLAND		
	SAFARI MOTOR COACH		
	TUTHILL TECHNOLOGIES		
	VOLVO		
	WABASH NATIONAL		
	WESTERN STAR		
83127	BLUE BIRD	C	Not Req'd.
	FREIGHTLINER		
	HOLIDAY RAMBLER		
	MACK		
	MC NEILUS TRUCK & MAN.		
	OSHKOSH MOTORS		
	SAF HOLLAND		
	TRAILMOBILE CANADA CORP.		
	VOLVO		
	WABASH NATIONAL		

GABRIEL PART #	APPLICATION	POP CODE	MTG ACC PKG #
83128	EAST MANUFACTURING CORP.	A	Not Req'd.
	FREIGHTLINER		
	HENDRICKSON TRAILER SUSPENSION		
	MC NEILUS TRUCK & MAN.		
	REYCO SUSPENSION		
	SAF HOLLAND		
	STOUGHTON TRAILERS INC.		
	TWIN COACH		
	VOLVO		
	WABASH NATIONAL		
83130	RIDEWELL CORPORATION	D	Not Req'd.
	SAF HOLLAND		
	VOLVO		
	WABASH NATIONAL		
83131	FORD	W	Not Req'd.
83134	FREIGHTLINER	W	145054(1)
83135	FORD	C	Not Req'd.
	IC CORPORATION		
	INTERNATIONAL		
83136	CHAMPION BUS INC	D	145054(2)
	CHEVROLET		
	GMC		
	GULF STREAM COACH		
	ISUZU		
	KENWORTH		
	PETERBILT		
	VOLVO		

NUMERICAL LISTING
LISTA NUMÉRICA
LISTE NUMÉRIQUE

GABRIEL PART #	APPLICATION	POP CODE	MTG ACC PKG #
83137	AUTOCAR LLC.	D	Not Req'd.
	BERING TRUCK CORP.		
	BLUE BIRD		
	CATERPILLAR		
	CHEVROLET		
	GMC		
	HENDRICKSON TRUCK SUSPENSION		
	HINO		
	INTERNATIONAL		
	ISUZU		
	KENWORTH		
	MACK		
	MC NEILUS TRUCK & MAN.		
	PETERBILT		
	SAF HOLLAND		
	VOLVO		
	WESTERN STAR		
83140	FORD	D	415010-802(2) 145148(2)
	HINO		
83141	HINO	W	415010-802(2) 145148(2)
83142	AUTOCAR LLC.	D	145128(1)
	CATERPILLAR		
	FREIGHTLINER		
	HENDRICKSON TRUCK SUSPENSION		
	INTERNATIONAL		
	KENWORTH		
	MACK		
	MC NEILUS TRUCK & MAN.		
	PETERBILT		
	VOLVO		
	WESTERN STAR		

GABRIEL PART #	APPLICATION	POP CODE	MTG ACC PKG #
83143	AUTOCAR LLC.	D	145128(1)
	CATERPILLAR		
	CRANE CARRIER		
	FREIGHTLINER		
	HENDRICKSON TRUCK SUSPENSION		
	INTERNATIONAL		
	KENWORTH		
	MACK		
	MC NEILUS TRUCK & MAN.		
	PETERBILT		
	VOLVO		
	WESTERN STAR		
83144	HENDRICKSON TRUCK SUSPENSION	W	Not Req'd.
	HOLIDAY RAMBLER		
	INTERNATIONAL		
	MONACO COACH		
83147	HENDRICKSON TRUCK SUSPENSION	B	Not Req'd.
	MACK		
	MC NEILUS TRUCK & MAN.		
	THOMAS SCHOOL BUS		
83148	FORD	W	Not Req'd.
	HENDRICKSON TRUCK SUSPENSION		
	HINO		
	MC NEILUS TRUCK & MAN.		
	VOLVO		
83149	HENDRICKSON TRUCK SUSPENSION	W	Not Req'd.
83150	HENDRICKSON TRAILER SUSPENSION	W	Not Req'd.
	SAF HOLLAND		
83154	FREIGHTLINER	D	145089-000(1)
83157	FREIGHTLINER	W	Not Req'd.
83158	MOTOR COACH INDUSTRIES	W	Not Req'd.
83159	ISUZU	W	TR0027(4)
	GMC		

GABRIEL PART #	APPLICATION	POP CODE	MTG ACC PKG #
83160	COACHMEN	W	Not Req'd.
	FLEETWOOD		
	FOREST RIVER		
	FREIGHTLINER		
	GULF STREAM COACH		
	HOLIDAY RAMBLER		
	ITASCA		
	KING OF THE ROAD		
	MANDALAY COACH		
	MONACO COACH		
	NEWMAR CORP		
	THOR MOTOR COACH		
	WINNEBAGO		
83162	ISUZU	W	140780(1) 406422 & 145116 415010-802(1)
	MITSUBISHI-FUSO		
	UD NISSAN		
83163	FORD	D	Not Req'd.
	IC CORPORATION		
	INTERNATIONAL		
83164	ARVIN MERITOR	X	Not Req'd.
	FREIGHTLINER		
83166	HINO	D	Not Req'd.
	HENDRICKSON TRUCK SUSPENSION		
	LION ELECTRIC		
83168	FORD	W	Not Req'd.
	HENDRICKSON TRUCK SUSPENSION		
	HINO		
	MC NEILUS TRUCK & MAN.		
83169	IC CORPORATION	W	Not Req'd.
	INTERNATIONAL		
83175	FORD	W	Not Req'd.
	GLAVAL BUS CO.		
	INTERNATIONAL		
	STARCRAFT BUS CO.		
83176	VARIOUS	X	Not Req'd.
83180	INTERNATIONAL	X	Not Req'd.

NUMERICAL LISTING
LISTA NUMÉRICA
LISTE NUMÉRIQUE

GABRIEL PART #	APPLICATION	POP CODE	MTG ACC PKG #
83203	BATCO	B	Not Req'd.
	CHANCE COACH		
	CHEVROLET		
	DURA SUSPENSION		
	FRUEHAUF		
	GMC		
	HUTCHENS SUSPENSION		
	MACK		
	MOHAWK		
	ORION BUS INDUSTRIES		
	PAGE SUSPENSION		
	PETERBILT		
	REYCO SUSPENSION		
	RIDEWELL CORPORATION		
	SAF HOLLAND		
	TUTHILL TECHNOLOGIES		
	VOLVO		
	WABASH NATIONAL		
	WATSON & CHALIN MFG. INC.		
83204	BATCO	W	Not Req'd.
	DUPLEX TRUCK		
	DURA SUSPENSION		
	PAGE SUSPENSION		
	REYCO SUSPENSION		
	SAF HOLLAND		
	TRAILMOBILE CANADA CORP.		
	TUTHILL TECHNOLOGIES		
	VOLVO		
	WATSON & CHALIN MFG. INC.		

GABRIEL PART #	APPLICATION	POP CODE	MTG ACC PKG #
83207	ADVANCE MIXER	C	Not Req'd.
	ARVIN MERITOR		
	BATCO		
	BLUE BIRD		
	BROCKWAY SCHOOL BUS		
	CHANCE COACH		
	CHEVROLET		
	DURA SUSPENSION		
	FORD		
	GILLIG BROS.		
	GMC		
	GREAT DANE TRAILER		
	HENDRICKSON TRUCK SUSPENSION		
	INTERNATIONAL		
	MACK		
	MC NEILUS TRUCK & MAN.		
	MOHAWK		
	NATIONAL COACH CORP		
	OSHKOSH MOTORS		
	REYCO SUSPENSION		
	RIDEWELL CORPORATION		
	SAF HOLLAND		
	TRAILMOBILE CANADA CORP.		
	TUTHILL TECHNOLOGIES		
	TWIN COACH		
	VOLVO		
	WABASH NATIONAL		

GABRIEL PART #	APPLICATION	POP CODE	MTG ACC PKG #
83209	ADVANCE MIXER	D	Not Req'd.
	ARVIN MERITOR		
	BATCO		
	CHEVROLET		
	COACHMEN		
	DAMON		
	ENTEGRA COACH		
	FLEETWOOD		
	FORD		
	FOREST RIVER		
	GEORGIE BOY MANUFACTURING		
	GMC		
	HENDRICKSON TRAILER SUSPENSION		
	HOLIDAY RAMBLER		
	INTERNATIONAL		
	ITASCA		
	JAYCO RV INC		
	KENWORTH		
	MACK		
	MC NEILUS TRUCK & MAN.		
	MONACO COACH		
	NATIONAL RV INC.		
	NEWMAR CORP		
	NEXUS RV		
	PETERBILT		
	REYCO SUSPENSION		
	SAF HOLLAND		
	THOR MOTOR COACH		
	TRAILMOBILE CANADA CORP.		
	TUTHILL TECHNOLOGIES		
	VOLVO		
	WESTERN STAR		
	WINNEBAGO		
83214	ARVIN MERITOR	W	401754(4)
	CHEVROLET		
	DIAMOND-REO		
	EAST MANUFACTURING CORP.		
	GMC		
	GRANNING SUSPENSION		
	OSTERLUND TRUCK		
	OTTAWA TRUCK		
	SPARTAN MOTORS		
	TUTHILL TECHNOLOGIES		
	VOLVO		

NUMERICAL LISTING
LISTA NUMÉRICA
LISTE NUMÉRIQUE

GABRIEL PART #	APPLICATION	POP CODE	MTG ACC PKG #
83215	ACF BRILL BUS	W	401754(4)
	ARVIN MERITOR		
	BROCKWAY SCHOOL BUS		
	CHEVROLET		
	FORD		
	GMC		
	HINO		
	INTERNATIONAL		
	KENWORTH		
	MACK		
	PAI CORP		
	PETERBILT		
	REYCO SUSPENSION		
	STERLING TRUCK		
	TUTHILL TECHNOLOGIES		
	VOLVO		
83216	ARVIN MERITOR	W	140149(1)
	AUTOCAR LLC.		
	BROCKWAY SCHOOL BUS		
	CHEVROLET		
	FORD		
	GILLIG BROS.		
	GMC		
	HINO		
	INTERNATIONAL		
	MACK		
	MARMON		
	MOHAWK		
	NEOPLAN BUS		
	ONEIDA PRODUCTS		
	STERLING TRUCK		
	VOLVO		
	WESTERN STAR		
83219	ARVIN MERITOR	C	140149(1)
	CHEVROLET		
	FORD		
	GILLIG BROS.		
	GMC		
	PETERBILT		
	VOLVO		

GABRIEL PART #	APPLICATION	POP CODE	MTG ACC PKG #
83221	BATCO	C	Not Req'd.
	CHEVROLET		
	GMC		
	MACK		
	OSHKOSH MOTORS		
	PAI CORP		
	VOLVO		
	WORKHORSE		
83225	ACF BRILL BUS	W	401754(4)
	ARVIN MERITOR		
	BATCO		
	FORD		
	FREIGHTLINER		
	HENDRICKSON TRUCK SUSPENSION		
	INTERNATIONAL		
	MACK		
	MOHAWK		
	TRAILMOBILE CANADA CORP.		
	VOLVO		
83242	ARVIN MERITOR	W	Not Req'd.
	MACK		
	VOLVO		
83243	CHEVROLET	N	Not Req'd.
	INTERNATIONAL		
83301	ARVIN MERITOR	W	141083(1)
	INTERNATIONAL		
	VOLVO		
83303	ARVIN MERITOR	W	140702(1)
	CHEVROLET		
	GMC		
	VOLVO		
83308	ARVIN MERITOR	W	140149(1)
	CHEVROLET		
	FORD		
	GMC		
	INTERNATIONAL		
	STERLING TRUCK		
83308	VOLVO	W	140149(1)
83309	ARVIN MERITOR	W	140149(1)
	FORD		
	INTERNATIONAL		
	STERLING TRUCK		
	VOLVO		

GABRIEL PART #	APPLICATION	POP CODE	MTG ACC PKG #
83312	ARVIN MERITOR	W	140149(1)
	FORD		
	KENWORTH		
	OSHKOSH MOTORS		
	PETERBILT		
	PIERCE MANUFACTURING INC.		
	VOLVO		
83314	ARVIN MERITOR	W	140149(1)
	FORD		
	GMC		
	INTERNATIONAL		
	STERLING TRUCK		
	VOLVO		
83317	BATCO	W	141083(1)
	FORD		
	GLAVAL BUS CO.		
	IC CORPORATION		
	INTERNATIONAL		
	STARCRAFT BUS CO.		
	VOLVO		
83318	ARVIN MERITOR	W	141083(2)
	INTERNATIONAL		
	VOLVO		
83363	SAF HOLLAND	W	Not Req'd.
	WABASH NATIONAL		
83364	FORD	W	Not Req'd.
	INTERNATIONAL		
	STERLING TRUCK		
83389	GREAT DANE TRAILER	W	Not Req'd.
	HENDRICKSON TRAILER SUSPENSION		
	SAF HOLLAND		
	STOUGHTON TRAILERS INC.		
	UTILITY TRAILER MAN. CO.		
	WABASH NATIONAL		
83391	HINO	W	145177(2)
83395	INTERNATIONAL	W	145054(1)
83396	FREIGHTLINER	N	Not Req'd.
83397	CHEVROLET	N	Not Req'd.
	INTERNATIONAL		
83398	CHEVROLET	N	Not Req'd.
	INTERNATIONAL		

NUMERICAL LISTING
LISTA NUMÉRICA
LISTE NUMÉRIQUE

GABRIEL PART #	APPLICATION	POP CODE	MTG ACC PKG #
83400	CHEVROLET	W	140455(2)
	GMC		
	MOR-RYDE SUSPENSION		
	VOLVO		
	WATSON & CHALIN MFG. INC.		
	WESTERN STAR		
83401	CHEVROLET	W	Not Req'd.
	GMC		
	VOLVO		
	WESTERN STAR		
83456	IC CORPORATION	C	142998(2)
	INTERNATIONAL		
	MITSUBISHI-FUSO		
	VOLVO		
83515	CHEVROLET	W	141041(1)
	GMC		
	ISUZU		
	UD NISSAN		
	VOLVO		
83518	HINO	W	141041(1) TR0027(2)
83519	HINO	W	401011(4)
83613	ARVIN MERITOR	W	141083(2)
	INTERNATIONAL		
	ISUZU		
	THOMAS SCHOOL BUS		
	VOLVO		
83635	SAF HOLLAND	W	145054(1)
	VOLVO		
	WESTERN STAR		
83901	MACK	W	Not Req'd.
83905	VOLVO	W	Not Req'd.
83906	FREIGHTLINER	W	Not Req'd.
83907	INTERNATIONAL	N	Not Req'd.
83908	KENWORTH	N	Not Req'd.
	PETERBILT		
83909	INTERNATIONAL	N	Not Req'd.
83910	MACK	N	Not Req'd.
83911	FREIGHTLINER	N	Not Req'd.

GABRIEL PART #	APPLICATION	POP CODE	MTG ACC PKG #
85000	ARVIN MERITOR	A	Not Req'd.
	BENSON TRUCK BODIES INC.		
	CUSH CORPORATION		
	EAST MANUFACTURING CORP.		
	FREIGHTLINER		
	GREAT DANE TRAILER		
	HENDRICKSON TRAILER SUSPENSION		
	KENWORTH		
	MC NEILUS TRUCK & MAN.		
	ORION BUS INDUSTRIES		
	PETERBILT		
	RIDEWELL CORPORATION		
	SAF HOLLAND		
	STOUGHTON TRAILERS INC.		
	THOMAS SCHOOL BUS		
	TRAILMOBILE CANADA CORP.		
	TWIN COACH		
	UTILITY TRAILER MAN. CO.		
	VOLVO		
	WABASH NATIONAL		
	WATSON & CHALIN MFG. INC.		
85001	ARVIN MERITOR	A	401754(4)
	FORD		
	INTERNATIONAL		
	KENWORTH		
	MACK		
	PETERBILT		
	REYCO SUSPENSION		
	STERLING TRUCK		
	TUTHILL TECHNOLOGIES		
	VOLVO		
85003	ARVIN MERITOR	A	Not Req'd.
	BATCO		
	IC CORPORATION		
	INTERNATIONAL		
	KENWORTH		
	MARMON		
	PETERBILT		
	VOLVO		
85004	ARVIN MERITOR	W	401754(4)
	PETERBILT		
	SAF HOLLAND		

GABRIEL PART #	APPLICATION	POP CODE	MTG ACC PKG #
85005	ARVIN MERITOR	B	Not Req'd.
	AUTOCAR LLC.		
	BATCO		
	BLUE BIRD		
	BOYDSTUN EQUIPMENT MAN.		
	CHEVROLET		
	CUSH CORPORATION		
	EAST MANUFACTURING CORP.		
	FREIGHTLINER		
	GMC		
	HENDRICKSON TRAILER SUSPENSION		
	HENDRICKSON TRUCK SUSPENSION		
	INTERNATIONAL		
	MACK		
	REYCO SUSPENSION		
	RIDEWELL CORPORATION		
	SAF HOLLAND		
	TUTHILL TECHNOLOGIES		
	VOLVO		
	WATSON & CHALIN MFG. INC.		
85006	ARVIN MERITOR	B	Not Req'd.
	BLUE BIRD		
	BUILT RITE		
	DEXTER AXLE		
	FORD		
	FREIGHTLINER		
	GREAT DANE TRAILER		
	HENDRICKSON TRAILER SUSPENSION		
	HENDRICKSON TRUCK SUSPENSION		
	REYCO SUSPENSION		
	RIDEWELL CORPORATION		
	SAF HOLLAND		
	STERLING TRUCK		
	STOUGHTON TRAILERS INC.		
	THE BINKLEY COMPANY		
	THOMAS SCHOOL BUS		
	TRAILMOBILE CANADA CORP.		
	TUTHILL TECHNOLOGIES		
	VOLVO		
	WESTERN STAR		

NUMERICAL LISTING
LISTA NUMÉRICA
LISTE NUMÉRIQUE

GABRIEL PART #	APPLICATION	POP CODE	MTG ACC PKG #
85007	ARVIN MERITOR	W	401754(4)
	BATCO		
	FREIGHTLINER		
	KENWORTH		
	MACK		
	PETERBILT		
	REYCO SUSPENSION		
	SPARTAN MOTORS		
	TUTHILL TECHNOLOGIES		
	VOLVO		
85009	ARVIN MERITOR	W	145054(1)
	FREIGHTLINER		
	MITSUBISHI-FUSO		
	NEOPLAN BUS		
	WATSON & CHALIN MFG. INC.		
85010	ARVIN MERITOR	W	Not Req'd.
	BLUE BIRD		
	FORD		
	HENDRICKSON TRAILER SUSPENSION		
	HOLIDAY RAMBLER		
	MACK		
	MONACO COACH		
85012	ARVIN MERITOR	B	145080(2)
	BLUE BIRD		
	BROCKWAY SCHOOL BUS		
	CHANCE COACH		
	CHEVROLET		
	FORD		
	INTERNATIONAL		
	ISUZU		
	KENWORTH		
	PETERBILT		
	VOLVO		

GABRIEL PART #	APPLICATION	POP CODE	MTG ACC PKG #
85013	ARVIN MERITOR	C	Not Req'd.
	BLUE BIRD		
	FORD		
	HENDRICKSON TRAILER SUSPENSION		
	HENDRICKSON TRUCK SUSPENSION		
	INTERNATIONAL		
	KENWORTH		
	MC NEILUS TRUCK & MAN.		
	PETERBILT		
	REYCO SUSPENSION		
	SAF HOLLAND		
	SPARTAN MOTORS		
	STERLING TRUCK		
	TRAILMOBILE CANADA CORP.		
	TUTHILL TECHNOLOGIES		
	VOLVO		
85014	ARVIN MERITOR	D	Not Req'd.
	CHANCE COACH		
	CUSH CORPORATION		
	HENDRICKSON TRAILER SUSPENSION		
	INTERNATIONAL		
	MACK		
	REYCO SUSPENSION		
	RIDEWELL CORPORATION		
	SAF HOLLAND		
	THOMAS SCHOOL BUS		
	TUTHILL TECHNOLOGIES		
	WATSON & CHALIN MFG. INC.		
85023	INTERNATIONAL	C	140149(1)
	KENWORTH		
	MACK		
	PETERBILT		
	VOLVO		
85024	AUTOCAR LLC.	W	140149(1)
	INTERNATIONAL		
	MACK		
	VOLVO		
85026	ARVIN MERITOR	W	145054(1)
	AUTOCAR LLC.		
	GMC		
	VOLVO		

GABRIEL PART #	APPLICATION	POP CODE	MTG ACC PKG #
85027	ARVIN MERITOR	W	145054(2)
	AUTOCAR LLC.		
	INTERNATIONAL		
	VOLVO		
85029	ARVIN MERITOR	B	Not Req'd.
	BLUE BIRD		
	COACHMEN		
	DURA SUSPENSION		
	EAST MANUFACTURING CORP.		
	FLEETWOOD		
	FOREST RIVER		
	FREIGHTLINER		
	GULF STREAM COACH		
	HENDRICKSON TRAILER SUSPENSION		
	HOLIDAY RAMBLER		
	INTERNATIONAL		
	ITASCA		
	KENWORTH		
	KING OF THE ROAD		
	MANDALAY COACH		
	MONACO COACH		
	NEWMAR CORP		
	PAGE SUSPENSION		
	PETERBILT		
	RIDEWELL CORPORATION		
	SAF HOLLAND		
	SPARTAN MOTORS		
	THOR MOTOR COACH		
	TRAILMOBILE CANADA CORP.		
	WATSON & CHALIN MFG. INC.		
	WINNEBAGO		

NUMERICAL LISTING
LISTA NUMÉRICA
LISTE NUMÉRIQUE

GABRIEL PART #	APPLICATION	POP CODE	MTG ACC PKG #
85030	ARVIN MERITOR	C	Not Req'd.
	BLUE BIRD		
	CHEVROLET		
	EAST MANUFACTURING CORP.		
	FORD		
	FRUEHAUF		
	GMC		
	HENDRICKSON TRAILER SUSPENSION		
	HENDRICKSON TRUCK SUSPENSION		
	INTERNATIONAL		
	OSHKOSH MOTORS		
	PACIFIC TRUCK & TRAILER		
	PIERCE MANUFACTURING INC.		
	REYCO SUSPENSION		
	SAF HOLLAND		
	SPARTAN MOTORS		
	STERLING TRUCK		
	THOMAS SCHOOL BUS		
	TUTHILL TECHNOLOGIES		
	VOLVO		
	WABASH NATIONAL		
85031	KENWORTH	D	145147(1) & TR0027(2)
	PETERBILT		
85033	INTERNATIONAL	A	145099(1)
	KENWORTH		
	MACK		
	PACCAR		
	PETERBILT		
	VOLVO		
85036	AUTOCAR LLC.	D	Not Req'd.
	BLUE BIRD		
	HENDRICKSON TRUCK SUSPENSION		
	KENWORTH		
	LION BUS		
	MACK		
	PETERBILT		
	SPARTAN MOTORS		
	VOLVO		
	XOS TRUCK COMPANY		
85040	FORD	W	401754(4)
	STERLING TRUCK		
	VOLVO		

GABRIEL PART #	APPLICATION	POP CODE	MTG ACC PKG #
85042	FREIGHTLINER	X	401754(4)
85043	FREIGHTLINER	D	Not Req'd.
	HENDRICKSON TRAILER SUSPENSION		
	HENDRICKSON TRUCK SUSPENSION		
	LINK MANUFACTURING LTD.		
85045	ARVIN MERITOR	A	Not Req'd.
	CUSH CORPORATION		
	HENDRICKSON TRAILER SUSPENSION		
	INGERSOLL AXLES		
	MUNCIE RECLAMATION		
	REYCO SUSPENSION		
	RIDEWELL CORPORATION		
	SAF HOLLAND		
	TUTHILL TECHNOLOGIES		
	UTILITY TRAILER MAN. CO.		
	VOLVO		
	WABASH NATIONAL		
	WATSON & CHALIN MFG. INC.		
85046	AUTOCAR LLC.	W	140149(1)
	VOLVO		
85047	FORD	D	140149(1)
	KENWORTH		
	PETERBILT		
	STERLING TRUCK		
	VOLVO		
85051	BLUE BIRD	D	Not Req'd.
	GILLIG BROS.		
	MUNCIE RECLAMATION		
	OSHKOSH MOTORS		
	REYCO SUSPENSION		
	SAF HOLLAND		
	STOUGHTON TRAILERS INC.		
	TRAILMOBILE CANADA CORP.		
	TUTHILL TECHNOLOGIES		
	WABASH NATIONAL		

GABRIEL PART #	APPLICATION	POP CODE	MTG ACC PKG #
85052	ARVIN MERITOR	A	Not Req'd.
	BLUE BIRD		
	GREAT DANE TRAILER		
	HENDRICKSON TRAILER SUSPENSION		
	INGERSOLL AXLES		
	REYCO SUSPENSION		
	SAF HOLLAND		
	TUTHILL TECHNOLOGIES		
	VOLVO		
	WABASH NATIONAL		
	WATSON & CHALIN MFG. INC.		
85053	WESTERN STAR	C	145126(2)
85054	FORD	W	145080(2)
	STERLING TRUCK		
85055	FORD	W	145080(2)
	STERLING TRUCK		
85058	BLUE BIRD	B	Not Req'd.
	FREIGHTLINER		
	INTERNATIONAL		
	OSHKOSH MOTORS		
	PIERCE MANUFACTURING INC.		
	SAFARI MOTOR COACH		
	THOMAS SCHOOL BUS		
	VOLVO		
85059	RED LION TRAILER	W	Not Req'd.
	SAF HOLLAND		
	STOUGHTON TRAILERS INC.		
	TRAILMOBILE CANADA CORP.		
	WABASH NATIONAL		
85060	AUTOCAR LLC.	C	Not Req'd.
	CHALMERS SUSPENSION		
	FREIGHTLINER		
	INTERNATIONAL		
	KENWORTH		
	PETERBILT		
	SAF HOLLAND		
	VOLVO		
	WATSON & CHALIN MFG. INC.		
	WESTERN STAR		
85061	MACK	A	Not Req'd.
	POWERHOUSE COACH INC.		
	RENEGADE RV		
	VOLVO		

NUMERICAL LISTING
LISTA NUMÉRICA
LISTE NUMÉRIQUE

GABRIEL PART #	APPLICATION	POP CODE	MTG ACC PKG #
85062	KENWORTH	A	145080(2)
	PETERBILT		
	VOLVO		
85063	FORD	W	145080(2)
	STERLING TRUCK		
85064	CUSH CORPORATION	C	Not Req'd.
	GREAT DANE TRAILER		
	HENDRICKSON TRAILER SUSPENSION		
	WATSON & CHALIN MFG. INC.		
85065	MACK	W	145128(1)
	VOLVO		
85066	MACK	A	Not Req'd.
	POWERHOUSE COACH INC.		
	RENEGADE RV		
	VOLVO		
85067	KENWORTH	A	Not Req'd.
	PETERBILT		
	VOLVO		
85069	ARVIN MERITOR	A	145089-000(2)
	KENWORTH		
	PETERBILT		
	VOLVO		
85070	KENWORTH	A	401754(2)
	PETERBILT		
	VOLVO		
85071	CHEVROLET	W	145054(2)
	GMC		
	ISUZU		
85072	AUTOCAR LLC.	C	Not Req'd.
	CATERPILLAR		
	HENDRICKSON TRUCK SUSPENSION		
	INTERNATIONAL		
	KENWORTH		
	MACK		
	MC NEILUS TRUCK & MAN.		
	VOLVO		
	WESTERN STAR		
85078	DANA	W	Not Req'd.
	WABASH NATIONAL		
85079	HENDRICKSON TRAILER SUSPENSION	W	Not Req'd.
	MC NEILUS TRUCK & MAN.		
85080	MACK	W	145054(1)
	VOLVO		

GABRIEL PART #	APPLICATION	POP CODE	MTG ACC PKG #
85081	VOLVO	W	145090(1)
85082	IC CORPORATION	W	Not Req'd.
	INTERNATIONAL		
85084	KENWORTH	C	Not Req'd.
	PETERBILT		
85086	AUTOCAR LLC.	W	Not Req'd.
	BLUE BIRD		
	REYCO SUSPENSION		
85087	HENDRICKSON TRUCK SUSPENSION	W	Not Req'd.
	MC NEILUS TRUCK & MAN.		
85088	MACK	A	Not Req'd.
	POWERHOUSE COACH INC.		
	RENEGADE RV		
	VOLVO		
85090	BLUE BIRD	W	Not Req'd.
85098	MACK	A	Not Req'd.
	POWERHOUSE COACH INC.		
	RENEGADE RV		
	VOLVO		
85102	HENDRICKSON TRUCK SUSPENSION	W	Not Req'd.
	INTERNATIONAL		
85106	BLUE BIRD	W	Not Req'd.
85109	KENWORTH	W	Not Req'd.
	PETERBILT		
	SAF HOLLAND		
	VOLVO		
	WESTERN STAR		
85119	KENWORTH	W	Not Req'd.
	PETERBILT		
85120	MACK	X	Not Req'd.
85122	FREIGHTLINER	X	145089-000(1)
	THOMAS SCHOOL BUS		
85124	DAMON	W	145054(2)
	FLEETWOOD		
	HOLIDAY RAMBLER		
	ITASCA		
	MONACO COACH		
	NATIONAL RV INC.		
	WINNEBAGO		
	WORKHORSE		

GABRIEL PART #	APPLICATION	POP CODE	MTG ACC PKG #
85125	DAMON	W	Not Req'd.
	HOLIDAY RAMBLER		
	ITASCA		
	MONACO COACH		
	NATIONAL RV INC.		
	WINNEBAGO		
	WORKHORSE		
85180	FORD	X	Not Req'd.
	GLAVAL BUS CO.		
	STARCRAFT BUS CO.		
85181	FORD	W	Not Req'd.
	GLAVAL BUS CO.		
	STARCRAFT BUS CO.		
85182	KENWORTH	W	145089-200(2)
	PETERBILT		
85188	MACK	N	Not Req'd.
	VOLVO		
85200	FREIGHTLINER	N	Not Req'd.
85300	ARVIN MERITOR	D	401754(4)
	BATCO		
	CHEVROLET		
	FREIGHTLINER		
	FRUEHAUF		
	GMC		
	GRANNING SUSPENSION		
	HOBBS TRAILERS		
	INTERNATIONAL		
	MUNCIE RECLAMATION		
	OSHKOSH MOTORS		
	OSTERLUND TRUCK		
	OTTAWA TRUCK		
	PIERCE MANUFACTURING INC.		
	REYCO SUSPENSION		
	SAF HOLLAND		
	SEAGRAVE FIRE APPARATUS LLC		
	TUTHILL TECHNOLOGIES		
	VOLVO		
	WABASH NATIONAL		
	WATSON & CHALIN MFG. INC.		
	WESTERN UNIT STABILAIRE SUSP.		

NUMERICAL LISTING
LISTA NUMÉRICA
LISTE NUMÉRIQUE

GABRIEL PART #	APPLICATION	POP CODE	MTG ACC PKG #
85301	BATCO	W	401754(4)
	BECK BUS		
	CHEVROLET		
	CLARK EQUIPMENT		
	FLXIBLE BUS		
	FORD		
	FREIGHTLINER		
	GMC		
	HENDRICKSON TRAILER SUSPENSION		
	SAF HOLLAND		
	STERLING TRUCK		
	VOLVO		
85302	AM GENERAL	W	401754(4)
	ARVIN MERITOR		
	CHEVROLET		
	CRANE CARRIER		
	FORD		
	FREIGHTLINER		
	FWD TRUCK		
	GILLIG BROS.		
	GMC		
	KENWORTH		
	MACK		
	MOTOR COACH INDUSTRIES		
	PETERBILT		
	RIDEWELL CORPORATION		
	VOLVO		

GABRIEL PART #	APPLICATION	POP CODE	MTG ACC PKG #
85303	ACF BRILL BUS	W	401754(4)
	BROCKWAY SCHOOL BUS		
	BUILT RITE		
	BUS & TRUCK CO.		
	CHEVROLET		
	CONTINENTAL TRAILWAYS-EAGLE INTL		
	CRANE CARRIER		
	CROWN COACH		
	EAGLE MOTOR COACH		
	GMC		
	GREYHOUND BUS		
	HENDRICKSON TRUCK SUSPENSION		
	INTERNATIONAL		
	KENWORTH		
	MACK		
	MATSON SCHOOL BUS		
	MC NEILUS TRUCK & MAN.		
	MOHAWK		
	MOTOR COACH INDUSTRIES		
	ORION BUS INDUSTRIES		
	OSHKOSH MOTORS		
	OTTAWA TRUCK		
	PETERBILT		
	PREVOST		
	TRANSPORTATION MFG. CORP		
	VOLVO		
	WESTERN STAR		

GABRIEL PART #	APPLICATION	POP CODE	MTG ACC PKG #
85304	ARVIN MERITOR	W	401754(4)
	BECK BUS		
	BLUE BIRD		
	BROCKWAY SCHOOL BUS		
	CHEVROLET		
	CONTINENTAL TRAILWAYS-EAGLE INTL		
	CRANE CARRIER		
	CROWN COACH		
	DIAMOND T		
	DIAMOND-REO		
	EAGLE MOTOR COACH		
	FLXIBLE BUS		
	FORD		
	FRUEHAUF		
	GILLIG BROS.		
	GMC		
	MACK		
	OSHKOSH MOTORS		
	PIERCE MANUFACTURING INC.		
	RIDEWELL CORPORATION		
	SAF HOLLAND		
	SOUTHERN COACH		
	SPARTAN MOTORS		
	THOMAS SCHOOL BUS		
	UNITED MANUFACTURING		
	VOLVO		
	WESTERN STAR		
	WESTERN UNIT STABILAIRE SUSP.		

NUMERICAL LISTING
LISTA NUMÉRICA
LISTE NUMÉRIQUE

GABRIEL PART #	APPLICATION	POP CODE	MTG ACC PKG #
85305	ARVIN MERITOR	W	401754(4)
	BATCO		
	BROCKWAY SCHOOL BUS		
	BUILT RITE		
	BUS & TRUCK CO.		
	CHEVROLET		
	CONTINENTAL TRAILWAYS-EAGLE INTL		
	EAGLE MOTOR COACH		
	FLXIBLE BUS		
	FORD		
	FRUEHAUF		
	GMC		
	HENDRICKSON TRUCK SUSPENSION		
	MACK		
	MC NEILUS TRUCK & MAN.		
	MOHAWK		
	PAI CORP		
	RIDEWELL CORPORATION		
	VOLVO		
	WESTERN STAR		
	WESTERN UNIT STABILAIRE SUSP.		

GABRIEL PART #	APPLICATION	POP CODE	MTG ACC PKG #
85307	ACF BRILL BUS	W	401754(4)
	ARVIN MERITOR		
	BECK BUS		
	BLUE BIRD		
	BROCKWAY SCHOOL BUS		
	CHEVROLET		
	CLARK EQUIPMENT		
	CONTINENTAL TRAILWAYS-EAGLE INTL		
	CRANE CARRIER		
	DIAMOND-REO		
	EAGLE MOTOR COACH		
	FLXIBLE BUS		
	FORD		
	GMC		
	HENDRICKSON TRUCK SUSPENSION		
	INTERNATIONAL		
	MACK		
	ORION BUS INDUSTRIES		
	PIERCE MANUFACTURING INC.		
	REYCO SUSPENSION		
	RIDEWELL CORPORATION		
	SPARTAN MOTORS		
	THOMAS SCHOOL BUS		
	VOLVO		
	WESTERN STAR		
	WESTERN UNIT STABILAIRE SUSP.		

GABRIEL PART #	APPLICATION	POP CODE	MTG ACC PKG #
85308	ACF BRILL BUS	W	401754(4)
	ARVIN MERITOR		
	BATCO		
	CHEVROLET		
	EAGLE MOTOR COACH		
	FREIGHTLINER		
	GMC		
	HINO		
	INTERNATIONAL		
	KENWORTH		
	MACK		
	MOHAWK		
	ORION BUS INDUSTRIES		
	PETERBILT		
	PREVOST		
	THOMAS SCHOOL BUS		
	UD NISSAN		
	VOLVO		
	WESTERN STAR		
	WESTERN UNIT STABILAIRE SUSP.		
85310	ARVIN MERITOR	B	141108(1)
	INTERNATIONAL		
	KENWORTH		
	MACK		
	OTTAWA TRUCK		
	PETERBILT		
	VOLVO		
85311	ARVIN MERITOR	A	141247(1)
	BATCO		
	FLXIBLE BUS		
	INTERNATIONAL		
	KENWORTH		
	LEYLAND TRUCK		
	MACK		
	PETERBILT		
	VOLVO		
85312	ARVIN MERITOR	S	141247(1)
	MOTOR COACH INDUSTRIES		
	TRANSPORTATION MFG. CORP		

NUMERICAL LISTING
LISTA NUMÉRICA
LISTE NUMÉRIQUE

GABRIEL PART #	APPLICATION	POP CODE	MTG ACC PKG #
85314	ARVIN MERITOR	W	401754(4)
	AUTOCAR LLC.		
	CHALMERS SUSPENSION		
	EAGLE MOTOR COACH		
	FORD		
	KENWORTH		
	PETERBILT		
	STERLING TRUCK		
	VOLVO		
85315	CLARK EQUIPMENT	W	401754(4)
	CUNHA PRODUCTS OHD		
	FORD		
	JIFFLOX		
	KWK-LOC (JIFFLOX)		
	VOLVO		
	WESTERN STAR		
85316	INTERNATIONAL	C	145090(1)
	MACK		
	OSHKOSH MOTORS		
	PIERCE MANUFACTURING INC.		
	VOLVO		
85318	ARVIN MERITOR	W	145054(2)
	GILLIG BROS.		
	HAUSMAN		
	VOLVO		
85319	FREIGHTLINER	C	145089-000(1)
	INTERNATIONAL		
	KENWORTH		
	MACK		
	PETERBILT		
	VOLVO		
85320	FREIGHTLINER	A	401754(4)
	KENWORTH		
	PETERBILT		
	VOLVO		
85321	ARVIN MERITOR	W	Not Req'd.
	FRUEHAUF		
	HOLLAND - BINKLEY		
	MACK		
	SAF HOLLAND		
	VOLVO		
	WABASH NATIONAL		
	WATSON & CHALIN MFG. INC.		

GABRIEL PART #	APPLICATION	POP CODE	MTG ACC PKG #
85322	FRUEHAUF	W	401754(2)
	VOLVO		
	WABASH NATIONAL		
85323	ARVIN MERITOR	A	Not Req'd.
	EAST MANUFACTURING CORP.		
	GREAT DANE TRAILER		
	HENDRICKSON TRAILER SUSPENSION		
	INGERSOLL AXLES		
	KENWORTH		
	MC NEILUS TRUCK & MAN.		
	REYCO SUSPENSION		
	SAF HOLLAND		
	UTILITY TRAILER MAN. CO.		
	VOLVO		
	WABASH NATIONAL		
	WATSON & CHALIN MFG. INC.		
85329	ARVIN MERITOR	W	401754(4)
	BLUE BIRD		
	E-ONE		
	PREVOST		
85331	FREIGHTLINER	C	Not Req'd.
	WESTERN STAR		
85332	IC CORPORATION	W	145128(1)
	INTERNATIONAL		
85333	INTERNATIONAL	W	145128(1)
85334	ADVANCE MIXER	W	401754(4)
	MC NEILUS TRUCK & MAN.		
	REYCO SUSPENSION		
85335	FREIGHTLINER	W	Not Req'd.
85337	HENDRICKSON TRAILER SUSPENSION	W	Not Req'd.
85338	HENDRICKSON TRAILER SUSPENSION	D	Not Req'd.
	UTILITY TRAILER MAN. CO.		
85339	MOTOR COACH INDUSTRIES	W	401754(4)
	PREVOST		
	TRANSPORTATION MFG. CORP		
	VOLVO		
85340	MOTOR COACH INDUSTRIES	W	145089-000(1)
85341	MOTOR COACH INDUSTRIES	W	145089-000(1)
85343	KENWORTH	D	145089-000(1) 401754(2)
	PETERBILT		
85344	HENDRICKSON TRAILER SUSPENSION	X	Not Req'd.
	WATSON & CHALIN MFG. INC.		

GABRIEL PART #	APPLICATION	POP CODE	MTG ACC PKG #
85345	HENDRICKSON TRAILER SUSPENSION	W	Not Req'd.
	MC NEILUS TRUCK & MAN.		
	WATSON & CHALIN MFG. INC.		
85351	IC CORPORATION	X	145090(1)
	INTERNATIONAL		
85376	FORD	W	401754(4)
	STERLING TRUCK		
85377	NOVA BUS	W	Not Req'd.
85382	HENDRICKSON TRAILER SUSPENSION	W	Not Req'd.
	WATSON & CHALIN MFG. INC.		
85637	INTERNATIONAL	W	Not Req'd.
85638	HENDRICKSON TRUCK SUSPENSION	W	Not Req'd.
85639	INTERNATIONAL	W	Not Req'd.
85642	INTERNATIONAL	N	Not Req'd.
85648	INTERNATIONAL	N	Not Req'd.
85649	RAM	N	143146(1)
	STERLING TRUCK		
85650	RAM	N	Not Req'd.
	STERLING TRUCK		
85656	INTERNATIONAL	N	Not Req'd.
85670	CHEVROLET	N	Not Req'd.
	INTERNATIONAL		
85700	ABC BUS	W	401754(4)
	AM GENERAL		
	ARVIN MERITOR		
	CHEVROLET		
	FLXIBLE BUS		
	FLYER INDUSTRIES		
	GMC		
	GREYHOUND BUS		
	GRUMMAN BUS		
	JAY MADSEN		
	KENWORTH		
	MOHAWK		
	MOTOR COACH INDUSTRIES		
	MUNCIE RECLAMATION		
	NOVA BUS		
	ORION BUS INDUSTRIES		
	PREVOST		
	SICARD		
	TRANSPORTATION MFG. CORP		
	VOLVO		

NUMERICAL LISTING
LISTA NUMÉRICA
LISTE NUMÉRIQUE

GABRIEL PART #	APPLICATION	POP CODE	MTG ACC PKG #
85702	ACF BRILL BUS	W	401754(4)
	ARVIN MERITOR		
	CHEVROLET		
	FLXIBLE BUS		
	GMC		
	HAUSMAN		
	MACK		
	MOHAWK		
	MOTOR COACH INDUSTRIES		
	MUNCIE RECLAMATION		
	NOVA BUS		
	PREVOST		
	REYCO SUSPENSION		
	RIDEWELL CORPORATION		
	SPARTAN MOTORS		
	TRANSPORTATION MFG. CORP		
	TUTHILL TECHNOLOGIES		
	VOLVO		
85704	ARVIN MERITOR	W	401754(4)
	CHEVROLET		
	FLXIBLE BUS		
	GMC		
	GRUMMAN BUS		
	MOHAWK		
	MOTOR COACH INDUSTRIES		
	MUNCIE RECLAMATION		
	REYCO SUSPENSION		
	RIDEWELL CORPORATION		
	TUTHILL TECHNOLOGIES		
	VOLVO		
85705	ARVIN MERITOR	W	145090(2)
	FLXIBLE BUS		
	INTERNATIONAL		
	MUNCIE RECLAMATION		
	NEOPLAN BUS		
	VOLVO		

GABRIEL PART #	APPLICATION	POP CODE	MTG ACC PKG #
85708	ABC BUS	W	145090(2)
	ARVIN MERITOR		
	CHEVROLET		
	FLXIBLE BUS		
	FLYER INDUSTRIES		
	GILLIG BROS.		
	GMC		
	MAN BUS		
	MOTOR COACH INDUSTRIES		
	MUNCIE RECLAMATION		
	NEW FLYER		
	NORTH AMERICAN BUS INDUSTRIES		
	PREVOST		
	VAN HOOL		
	VOLVO		
85709	ABC BUS	W	145090(2)
	MAN BUS		
	MOTOR COACH INDUSTRIES		
	MUNCIE RECLAMATION		
	VOLVO		
85711	ARVIN MERITOR	W	145054(1) & 401754(2)
	CHEVROLET		
	FLXIBLE BUS		
	FLYER INDUSTRIES		
	GMC		
	MOTOR COACH INDUSTRIES		
	NEW FLYER		
	ORION BUS INDUSTRIES		
	TRANSPORTATION MFG. CORP		
	VOLVO		

GABRIEL PART #	APPLICATION	POP CODE	MTG ACC PKG #
85712	ARVIN MERITOR	D	401754(4)
	BLUE BIRD		
	CARPENTER BUS		
	CRANE CARRIER		
	DIAMOND-REO		
	FLUIDRIVE		
	FLXIBLE BUS		
	FORD		
	GILLIG BROS.		
	GRANNING SUSPENSION		
	HENDRICKSON TRAILER SUSPENSION		
	MERITOR		
	ORION BUS INDUSTRIES		
	OSTERLUND TRUCK		
	RAYDAN MANUFACTURING		
	RIDEWELL CORPORATION		
	SEAGRAVE FIRE APPARATUS LLC		
	SPARTAN MOTORS		
	THOMAS SCHOOL BUS		
	TUTHILL TECHNOLOGIES		
	VOLVO		
85713	CARPENTER BUS	W	401754(4)
	CRANE CARRIER		
	EAGLE MOTOR COACH		
	MOTOR COACH INDUSTRIES		
	MUNCIE RECLAMATION		
	NOVA BUS		
	PREVOST		
	THOMAS SCHOOL BUS		
	TRANSPORTATION MFG. CORP		
85716	CRANE CARRIER	W	145093(1)
	FLXIBLE BUS		
	FORD		
	GILLIG BROS.		
	NEW FLYER		
	ORION BUS INDUSTRIES		
85720	NEW FLYER	W	401754(4)
	ORION BUS INDUSTRIES		
	OTTAWA TRUCK		

NUMERICAL LISTING
LISTA NUMÉRICA
LISTE NUMÉRIQUE

GABRIEL PART #	APPLICATION	POP CODE	MTG ACC PKG #
85722	ARVIN MERITOR	W	145090(2)
	FLYER INDUSTRIES		
	GILLIG BROS.		
	GMC		
	MAN BUS		
	MUNCIE RECLAMATION		
	NEW FLYER		
	VOLVO		
85723	GILLIG BROS.	W	145075(1)
	MOTOR COACH INDUSTRIES		
	MUNCIE RECLAMATION		
	VOLVO		
85724	DYNAMAX CORP.	A	Not Req'd.
	FEDERAL COACH		
	FREIGHTLINER		
	RENEGADE RV		
	STERLING TRUCK		
	THOMAS SCHOOL BUS		
	VOLVO		
	WESTERN STAR		
85727	ABC BUS	W	145176(2)
	MOTOR COACH INDUSTRIES		
85728	MOTOR COACH INDUSTRIES	W	145176(2)
	PREVOST		
85729	ABC BUS	W	145176(1) & 401754(2)
	MOTOR COACH INDUSTRIES		
	ORION BUS INDUSTRIES		
	PREVOST		
	UNIVERSAL COACH		
85732	ABC BUS	W	145116(2)
	ARVIN MERITOR		
	FLXIBLE BUS		
	MOHAWK		
	NEW FLYER		
	ORION BUS INDUSTRIES		

GABRIEL PART #	APPLICATION	POP CODE	MTG ACC PKG #
85733	ABC BUS	W	145089-000(1)
	CHEVROLET		
	EAGLE MOTOR COACH		
	FLXIBLE BUS		
	GMC		
	MOHAWK		
	MOTOR COACH INDUSTRIES		
	NOVA BUS		
	TRANSPORTATION MFG. CORP		
	VOLVO		
85734	BATCO	W	401754(4)
	BLUE BIRD		
	CHEVROLET		
	CROWN COACH		
	FLXIBLE BUS		
	GILLIG BROS.		
	GMC		
	INTERNATIONAL		
	LINK MANUFACTURING LTD.		
	OSHKOSH MOTORS		
	RIDEWELL CORPORATION		
	SAF HOLLAND		
	VOLVO		
85736	ACF BRILL BUS	W	401754(4)
	ARVIN MERITOR		
	BATCO		
	BLUE BIRD		
	FLXIBLE BUS		
	MOHAWK		
	PREVOST		
	RIDEWELL CORPORATION		
	THOMAS SCHOOL BUS		
	VOLVO		
85737	MERITOR	W	Not Req'd.
	SUSPENSYS		
85738	EAST MANUFACTURING CORP.	B	Not Req'd.
	HENDRICKSON TRAILER SUSPENSION		
	MC NEILUS TRUCK & MAN.		
	REYCO SUSPENSION		
	TUTHILL TECHNOLOGIES		
	UTILITY TRAILER MAN. CO.		

GABRIEL PART #	APPLICATION	POP CODE	MTG ACC PKG #
85739	INTERNATIONAL	W	Not Req'd.
	MACK		
	MERITOR		
	RAYDAN MANUFACTURING		
85740	KENWORTH	W	145090(1) & 401754(2)
	MOTOR COACH INDUSTRIES		
	PREVOST		
85900	COACHMEN	B	145054(2)
	FLEETWOOD		
	FOREST RIVER		
	FREIGHTLINER		
	GULF STREAM COACH		
	ITASCA		
	KENWORTH		
	KING OF THE ROAD		
	MANDALAY COACH		
	NEWMAR CORP		
	PETERBILT		
	THOR MOTOR COACH		
	VOLVO		
	WINNEBAGO		
85901	FREIGHTLINER	C	401754(4)
	KENWORTH		
	PETERBILT		
	RIDEWELL CORPORATION		
85902	KENWORTH	D	145054(2)
	PETERBILT		
85906	FORD	W	Not Req'd.
	KENWORTH		
	MACK		
	MC NEILUS TRUCK & MAN.		
	PETERBILT		
	SAF HOLLAND		
	STERLING TRUCK		
	VOLVO		
	WESTERN STAR		
85908	SAF HOLLAND	W	Not Req'd.

NUMERICAL LISTING
LISTA NUMÉRICA
LISTE NUMÉRIQUE

GABRIEL PART #	APPLICATION	POP CODE	MTG ACC PKG #
85909	FORD	D	Not Req'd.
	FREIGHTLINER		
	HENDRICKSON TRUCK SUSPENSION		
	KENWORTH		
	MACK		
	MC NEILUS TRUCK & MAN.		
	NEWMAR CORP		
	PETERBILT		
	ROADMASTER (MONACO)		
	SAF HOLLAND		
	SPARTAN MOTORS		
85910	BLUE BIRD	W	Not Req'd.
	FREIGHTLINER		
	KENWORTH		
	PETERBILT		
	ROADMASTER (MONACO)		
	SAF HOLLAND		
	SAFARI MOTOR COACH		
	SPARTAN MOTORS		
85911	HENDRICKSON TRAILER SUSPENSION	W	Not Req'd.
	SAF HOLLAND		
	UTILITY TRAILER MAN. CO.		
85916	GILLIG BROS.	W	Not Req'd.
	HENDRICKSON TRAILER SUSPENSION		
	HENDRICKSON TRUCK SUSPENSION		
	MC NEILUS TRUCK & MAN.		
	SAF HOLLAND		
	VOLVO		
85918	DYNAMAX CORP.	A	Not Req'd.
	FREIGHTLINER		
	STERLING TRUCK		
	THOMAS SCHOOL BUS		
	VOLVO		
	WESTERN STAR		
85919	BLUE BIRD	A	Not Req'd.
	FREIGHTLINER		
	GREAT DANE TRAILER		
	HENDRICKSON TRUCK SUSPENSION		
	MC NEILUS TRUCK & MAN.		
	MERITOR		
	PIERCE MANUFACTURING INC.		
	WABASH NATIONAL		
	WORKHORSE		

GABRIEL PART #	APPLICATION	POP CODE	MTG ACC PKG #
85920	DYNAMAX CORP.	C	Not Req'd.
	FREIGHTLINER		
	FEDERAL COACH		
	STERLING TRUCK		
85921	FREIGHTLINER	W	145054(1)
85923	INTERNATIONAL	D	Not Req'd.
85924	INTERNATIONAL	C	Not Req'd.
85925	INTERNATIONAL	W	Not Req'd.
85926	FORD	C	Not Req'd.
	IC CORPORATION		
	INTERNATIONAL		
	GLAVAL BUS CO.		
	STARCRAFT BUS CO.		
	STERLING TRUCK		
85927	FORD	W	Not Req'd.
	MACK		
	INTERNATIONAL		
85928	FORD	D	Not Req'd.
	INTERNATIONAL		
	GLAVAL BUS CO.		
	STARCRAFT BUS CO.		
85929	INTERNATIONAL	W	Not Req'd.
85931	INTERNATIONAL	A	Not Req'd.
85932	FREIGHTLINER	C	Not Req'd.
	HENDRICKSON TRUCK SUSPENSION		
	MC NEILUS TRUCK & MAN.		
	STERLING TRUCK		
	WESTERN STAR		
85933	HENDRICKSON TRUCK SUSPENSION	C	Not Req'd.
	MACK		
	MC NEILUS TRUCK & MAN.		
	POWERHOUSE COACH INC.		
	VOLVO		
85934	RIDEWELL CORPORATION	A	Not Req'd.
	WATSON & CHALIN MFG. INC.		
85935	INTERNATIONAL	W	145090(1)
85936	KENWORTH	B	145089-200(1)
	PETERBILT		
85937	KENWORTH	B	145089-200(1)
	PETERBILT		

GABRIEL PART #	APPLICATION	POP CODE	MTG ACC PKG #
85938	ARVIN MERITOR	B	Not Req'd.
	HENDRICKSON TRAILER SUSPENSION		
	INGERSOLL AXLES		
	REYCO SUSPENSION		
	TUTHILL TECHNOLOGIES		
	WATSON & CHALIN MFG. INC.		
85939	ARVIN MERITOR	D	Not Req'd.
	HENDRICKSON TRAILER SUSPENSION		
	TIMBREN INDUSTRIES		
	UTILITY TRAILER MAN. CO.		
	WATSON & CHALIN MFG. INC.		
85954	INTERNATIONAL	A	Not Req'd.
85955	HENDRICKSON TRUCK SUSPENSION	W	Not Req'd.
	INTERNATIONAL		
85956	FREIGHTLINER	C	Not Req'd.
	STERLING TRUCK		
	WESTERN STAR		
	VOLVO		
85957	FORD	C	Not Req'd.
	INTERNATIONAL		
	STERLING TRUCK		
85958	DYNAMAX CORP.	A	Not Req'd.
	FREIGHTLINER		
	WESTERN STAR		
	RENEGADE RV		
85959	BLUE BIRD	B	Not Req'd.
	DYNAMAX CORP.		
	FEDERAL COACH		
	FREIGHTLINER		
	HENDRICKSON TRUCK SUSPENSION		
	KENWORTH		
	LION BUS		
	MC NEILUS TRUCK & MAN.		
	PETERBILT		
	RENEGADE RV		
	SPARTAN MOTORS		
	TIFFIN MOTORHOMES INC		
	XOS TRUCK COMPANY		
85961	HENDRICKSON TRUCK SUSPENSION	W	Not Req'd.
85962	HENDRICKSON TRUCK SUSPENSION	W	Not Req'd.
	MC NEILUS TRUCK & MAN.		
	PIERCE MANUFACTURING INC.		
	SPARTAN MOTORS		

NUMERICAL LISTING
LISTA NUMÉRICA
LISTE NUMÉRIQUE

GABRIEL PART #	APPLICATION	POP CODE	MTG ACC PKG #
85963	INTERNATIONAL	D	Not Req'd.
85964	INTERNATIONAL	D	Not Req'd.
85965	AUTOCAR LLC.	W	Not Req'd.
	HENDRICKSON TRUCK SUSPENSION		
	INTERNATIONAL		
	KENWORTH		
	MC NEILUS TRUCK & MAN.		
	PIERCE MANUFACTURING INC.		
85967	AUTOCAR LLC.	W	Not Req'd.
	CATERPILLAR		
	HENDRICKSON TRUCK SUSPENSION		
	KENWORTH		
	MC NEILUS TRUCK & MAN.		
85970	MOTOR COACH INDUSTRIES	W	145089-000(1)
85972	MACK	W	Not Req'd.
85976	AUTOCAR LLC.	D	Not Req'd.
	BLUE BIRD		
	FORD		
	HENDRICKSON TRUCK SUSPENSION		
	INTERNATIONAL		
	MC NEILUS TRUCK & MAN.		
	VOLVO		
	WESTERN STAR		
85977	HENDRICKSON TRUCK SUSPENSION	W	145128(1)
	MC NEILUS TRUCK & MAN.		
85978	FORD	C	Not Req'd.
	HENDRICKSON TRUCK SUSPENSION		
	MACK		
	VOLVO		
85979	HENDRICKSON TRUCK SUSPENSION	W	Not Req'd.
	KENWORTH		
	MC NEILUS TRUCK & MAN.		
	WESTERN STAR		
85985	KENWORTH	W	145089-200(1)
	PETERBILT		
85986	HENDRICKSON TRUCK SUSPENSION	X	Not Req'd.
	IC CORPORATION		
	INTERNATIONAL		
85988	KENWORTH	W	145099(1)
	PETERBILT		
85989	KENWORTH	B	Not Req'd.
	PETERBILT		
85994	INTERNATIONAL	C	Not Req'd.

GABRIEL PART #	APPLICATION	POP CODE	MTG ACC PKG #
85995	INTERNATIONAL	W	Not Req'd.
85998	INTERNATIONAL	X	Not Req'd.
86200	MERITOR	C	Not Req'd.
87015	ARVIN MERITOR	W	Not Req'd.
	EAST MANUFACTURING CORP.		
	MERITOR		
87016	NEW FLYER	W	145116(1) 145090(1)
	ORION BUS INDUSTRIES		
87018	HENDRICKSON TRAILER SUSPENSION	W	Not Req'd.
89402	BLUE BIRD	W	140149(1)
	FORD		
	STERLING TRUCK		
	VOLVO		
89405	AUTOCAR	W	Not Req'd.
	BLUEBIRD SCHOOL BUS		
	FORD		
	GILLIG BROS.		
	HENDRICKSON TRUCK SUSPENSION		
	IC CORPORATION		
	INTERNATIONAL (NAVISTAR)		
	KENWORTH		
	LION BUS		
	MACK		
	PETERBILT		
	REYCO SUSPENSION		
	SAF HOLLAND		
	SPARTAN MOTORS		
	TUTHILL TECHNOLOGIES		
	VOLVO		
	WATSON & CHALIN MFG. INC.		
	XOS TRUCK COMPANY		

GABRIEL PART #	APPLICATION	POP CODE	MTG ACC PKG #
89406	ALLCO TRAILER	W	Not Req'd.
	AUTOCAR		
	CHEVROLET		
	COACHMEN RV		
	COUNTRY COACH		
	DAMON MOTOR COACH		
	ENTEGRA COACH		
	FLEETWOOD RV		
	FORD		
	FOREST RIVER INC		
	FREIGHTLINER		
	FRUEHAUF		
	GILLIG BROS.		
	GMC TRUCK		
	GREAT DANE TRAILER		
	HENDRICKSON TRUCK SUSPENSION		
	HOLIDAY RAMBLER		
	ISUZU		
	KENWORTH		
	MACK		
	MC NEILUS TRUCK & MAN.		
	OSHKOSH MOTORS		
	PETERBILT		
	REYCO SUSPENSION		
	SAF HOLLAND		
	THOR MOTOR COACH		
	TUTHILL TECHNOLOGIES		
	VOLVO		
	WESTERN STAR		
	WINNEBAGO		

NUMERICAL LISTING
LISTA NUMÉRICA
LISTE NUMÉRIQUE

GABRIEL PART #	APPLICATION	POP CODE	MTG ACC PKG #
89407	ADVANCE MIXER	W	Not Req'd.
	BLUEBIRD SCHOOL BUS		
	BROCKWAY SCHOOL BUS		
	COACHMEN RV		
	DURA SUSPENSION		
	FORD		
	FOREST RIVER INC		
	GILLIG BROS.		
	GMC TRUCK		
	GREAT DANE TRAILER		
	HENDRICKSON TRUCK SUSPENSION		
	INTERNATIONAL (NAVISTAR)		
	ITASCA		
	KENWORTH		
	MACK		
	MC NEILUS TRUCK & MAN.		
	OSHKOSH MOTORS		
	PETERBILT		
	REYCO SUSPENSION		
	RIDEWELL CORPORATION		
	SAF HOLLAND		
	STERLING TRUCK		
	TRAILMOBILE CANADA CORP.		
	TUTHILL TECHNOLOGIES		
	TWIN COACH		
	VOLVO		
	WABASH NATIONAL		
	WESTERN STAR		
	WINNEBAGO		
	WORKHORSE		
89408	KENWORTH	B	145080(2)
	PETERBILT		
	VOLVO		
89409	FORD	W	140149(1)
	KENWORTH		
	OSHKOSH MOTORS		
	PETERBILT		
	PIERCE MANUFACTURING INC.		
	VOLVO		

GABRIEL PART #	APPLICATION	POP CODE	MTG ACC PKG #
89410	FORD	C	401754(4)
	INTERNATIONAL (NAVISTAR)		
	KENWORTH		
	MACK		
	PETERBILT		
	REYCO SUSPENSION		
	STERLING TRUCK		
	TUTHILL TECHNOLOGIES		
	VOLVO		
89411	IC CORPORATION	W	Not Req'd.
	INTERNATIONAL (NAVISTAR)		
	KENWORTH		
	PETERBILT		
	VOLVO		
89413	BLUEBIRD SCHOOL BUS	D	145080(2)
	BROCKWAY SCHOOL BUS		
	CHANCE COACH		
	CHEVROLET TRUCK		
	FORD		
	GMC TRUCK		
	INTERNATIONAL (NAVISTAR)		
	ISUZU		
	KENWORTH		
	PETERBILT		
	VOLVO		

GABRIEL PART #	APPLICATION	POP CODE	MTG ACC PKG #
89414	ADVANCE MIXER	W	Not Req'd.
	BLUEBIRD SCHOOL BUS		
	CHEVROLET TRUCK		
	COACHMEN RV		
	COUNTRY COACH		
	DAMON MOTOR COACH		
	ENTEGRA COACH		
	FLEETWOOD RV		
	FORD		
	FOREST RIVER INC		
	GEORGIE BOY MANUFACTURING		
	GMC TRUCK		
	HENDRICKSON TRAILER SUSPENSION		
	HENDRICKSON TRUCK SUSPENSION		
	HOLIDAY RAMBLER		
	INTERNATIONAL (NAVISTAR)		
	ITASCA		
	JAYCO RV INC		
	KENWORTH		
	MACK		
	MC NEILUS TRUCK & MAN.		
	MONACO		
	NATIONAL RV INC.		
	PETERBILT		
	REYCO SUSPENSION		
	SAF HOLLAND		
	SPARTAN MOTORS		
	STERLING TRUCK		
	THOR MOTOR COACH		
	TRAILMOBILE CANADA CORP.		
	TUTHILL TECHNOLOGIES		
	VOLVO		
	WESTERN STAR		
	WINNEBAGO		
89415	INTERNATIONAL (NAVISTAR)	W	140149(1)
	KENWORTH		
	MACK		
	PETERBILT		
	VOLVO		

NUMERICAL LISTING
LISTA NUMÉRICA
LISTE NUMÉRIQUE

GABRIEL PART #	APPLICATION	POP CODE	MTG ACC PKG #
89418	AUTOCAR	X	145054(2)
	INTERNATIONAL (NAVISTAR)		
	VOLVO		
89419	CHEVROLET TRUCK	W	401754(4)
	FREIGHTLINER		
	FRUEHAUF		
	GMC TRUCK		
	GRANNING SUSPENSION		
	HOBBS TRAILERS		
	INTERNATIONAL (NAVISTAR)		
	MUNCIE RECLAMATION		
	OSHKOSH MOTORS		
	OSTERLUND TRUCK		
	OTTAWA TRUCK		
	PIERCE MANUFACTURING INC.		
	REYCO SUSPENSION		
	SAF HOLLAND		
	SEAGRAVE FIRE APPARATUS LLC		
	TUTHILL TECHNOLOGIES		
	VOLVO		
	WABASH NATIONAL		
	WATSON & CHALIN MFG. INC.		
89420	CHEVROLET TRUCK	W	401754(4)
	CRANE CARRIER		
	FORD		
	FREIGHTLINER		
	GILLIG BROS.		
	GMC TRUCK		
	KENWORTH		
	MACK		
	MOTOR COACH INDUSTRIES		
	PETERBILT		
	RIDEWELL CORPORATION		
	VOLVO		

GABRIEL PART #	APPLICATION	POP CODE	MTG ACC PKG #
89422	ACF BRILL BUS	W	401754(4)
	BECK BUS		
	BROCKWAY SCHOOL BUS		
	BUILT RITE		
	BUS & TRUCK CO.		
	CHEVROLET TRUCK		
	CONTINENTAL TRAILWAYS		
	CRANE CARRIER		
	CROWN COACH		
	EAGLE MOTOR COACH		
	FREIGHTLINER		
	GMC TRUCK		
	GREYHOUND BUS		
	HENDRICKSON TRUCK SUSPENSION		
	HINO		
	INTERNATIONAL (NAVISTAR)		
	ISUZU		
	KENWORTH		
	MACK		
	MATSON SCHOOL BUS		
	MC NEILUS TRUCK & MAN.		
	MCI		
	MOHAWK		
	MOTOR COACH INDUSTRIES		
	ORION BUS INDUSTRIES		
	OSHKOSH MOTORS		
	OTTAWA TRUCK		
	PETERBILT		
	PREVOST		
	THOMAS SCHOOL BUS		
	TRANSPORTATION MFG. CORP		
	VOLVO		
	WESTERN STAR		
89423	INTERNATIONAL (NAVISTAR)	D	141108(1)
	KENWORTH		
	MACK		
	OTTAWA TRUCK		
	PETERBILT		
	VOLVO		

GABRIEL PART #	APPLICATION	POP CODE	MTG ACC PKG #
89424	FLXIBLE BUS	B	141247(1)
	INTERNATIONAL (NAVISTAR)		
	KENWORTH		
	LEYLAND TRUCK		
	MACK		
	PETERBILT		
	VOLVO		
89425	AUTOCAR	W	401754(4)
	CHALMERS SUSPENSION		
	EAGLE MOTOR COACH		
	FORD		
	KENWORTH		
	PETERBILT		
	STERLING TRUCK		
	VOLVO		
89426	INTERNATIONAL (NAVISTAR)	W	145090(1)
	MACK		
	OSHKOSH MOTORS		
	PIERCE MANUFACTURING INC.		
	VOLVO		
89427	INTERNATIONAL (NAVISTAR)	C	145099(1)
	KENWORTH		
	MACK		
	PACCAR		
	PETERBILT		
	VOLVO		
89428	FREIGHTLINER	W	145089-000(1)
	INTERNATIONAL (NAVISTAR)		
	KENWORTH		
	MACK		
	PETERBILT		
	VOLVO		
89429	FREIGHTLINER	D	401754(4)
	KENWORTH		
	PETERBILT		
	VOLVO		

NUMERICAL LISTING
LISTA NUMÉRICA
LISTE NUMÉRIQUE

GABRIEL PART #	APPLICATION	POP CODE	MTG ACC PKG #
89430	AUTOCAR	D	Not Req'd.
	BLUEBIRD SCHOOL BUS		
	FREIGHTLINER		
	GMC TRUCK		
	HENDRICKSON TRAILER SUSPENSION		
	HENDRICKSON TRUCK SUSPENSION		
	HINO		
	INTERNATIONAL (NAVISTAR)		
	MACK		
	MC NEILUS TRUCK & MAN.		
	OSHKOSH MOTORS		
	REYCO SUSPENSION		
	RIDEWELL CORPORATION		
	SAF HOLLAND		
	TUTHILL TECHNOLOGIES		
	VOLVO		
	WABASH NATIONAL		
	WATSON & CHALIN MFG. INC.		
89431	BLUEBIRD SCHOOL BUS	W	Not Req'd.
	FREIGHTLINER		
	INTERNATIONAL (NAVISTAR)		
	OSHKOSH MOTORS		
	PIERCE MANUFACTURING INC.		
	THOMAS SCHOOL BUS		
	VOLVO		
89432	KENWORTH	W	Not Req'd.
89434	AUTOCAR	W	140149(1)
	VOLVO		
89435	FORD	W	140149(1)
	KENWORTH		
	PETERBILT		
	STERLING TRUCK		
	VOLVO		

GABRIEL PART #	APPLICATION	POP CODE	MTG ACC PKG #
89436	BENSON TRUCK BODIES INC.	B	Not Req'd.
	CHEVROLET TRUCK		
	FREIGHTLINER		
	FRUEHAUF		
	GREAT DANE TRAILER		
	HENDRICKSON TRAILER SUSPENSION		
	HUTCHENS SUSPENSION		
	INGERSOLL AXLES		
	KENWORTH		
	MACK		
	MC NEILUS TRUCK & MAN.		
	MOHAWK		
	ORION BUS INDUSTRIES		
	PETERBILT		
	REYCO SUSPENSION		
	RIDEWELL CORPORATION		
	SAF HOLLAND		
	STOUGHTON TRAILERS INC.		
	THOMAS SCHOOL BUS		
	TRAILMOBILE CANADA CORP.		
	TUTHILL TECHNOLOGIES		
	TWIN COACH		
	VOLVO		
	WABASH NATIONAL		
	WATSON & CHALIN MFG. INC.		
89437	EAST MANUFACTURING CORP.	W	Not Req'd.
	HENDRICKSON TRAILER SUSPENSION		
	THOMAS SCHOOL BUS		
89439	FORD	W	145080(2)

GABRIEL PART #	APPLICATION	POP CODE	MTG ACC PKG #
89440	BLUEBIRD SCHOOL BUS	W	Not Req'd.
	FORD		
	FREIGHTLINER		
	FRUEHAUF		
	HENDRICKSON TRAILER SUSPENSION		
	HENDRICKSON TRUCK SUSPENSION		
	INTERNATIONAL (NAVISTAR)		
	KENWORTH		
	OSHKOSH MOTORS		
	PETERBILT		
	PIERCE MANUFACTURING INC.		
	REYCO SUSPENSION		
	SAF HOLLAND		
	STERLING TRUCK		
	THOMAS SCHOOL BUS		
	TUTHILL TECHNOLOGIES		
	VOLVO		
	WABASH NATIONAL		
	WESTERN STAR		
89442	WESTERN STAR	W	145126(2)
89443	DYNAMAX CORP (COUNTRY COACH)	B	Not Req'd.
	FEDERAL COACH		
	FREIGHTLINER		
	RENEGADE RV		
	STERLING TRUCK		
	THOMAS SCHOOL BUS		
	VOLVO		
	WESTERN STAR		
89447	BLUEBIRD SCHOOL BUS	W	141108(1)
	FLXIBLE BUS		
	IC CORPORATION		
	INTERNATIONAL (NAVISTAR)		
	MERCEDES BENZ		
	MITSUBISHI-FUSO		
	MUNCIE RECLAMATION		
	NEOPLAN BUS		
	SCANIA		
	VOLVO		

NUMERICAL LISTING
LISTA NUMÉRICA
LISTE NUMÉRIQUE

GABRIEL PART #	APPLICATION	POP CODE	MTG ACC PKG #
89448	MACK	D	Not Req'd.
	POWERHOUSE COACH INC.		
	RENEGADE RV		
	VOLVO		
89449	DYNAMAX CORP (COUNTRY COACH)	C	Not Req'd.
	FREIGHTLINER		
	STERLING TRUCK		
	THOMAS SCHOOL BUS		
	VOLVO		
	WESTERN STAR		
89450	MACK	W	Not Req'd.
	POWERHOUSE COACH INC.		
	RENEGADE RV		
	VOLVO		
89451	KENWORTH	C	Not Req'd.
	PETERBILT		
	VOLVO		
89453	FREIGHTLINER	W	Not Req'd.
	HENDRICKSON TRUCK SUSPENSION		
	MC NEILUS TRUCK & MAN.		
	STERLING TRUCK		
	WESTERN STAR		
89454	HENDRICKSON TRUCK SUSPENSION	W	Not Req'd.
	MACK		
	MC NEILUS TRUCK & MAN.		
	POWERHOUSE COACH INC.		
	VOLVO		
89455	DAF	B	141108(1)
	KENWORTH		
	PETERBILT		
	VOLVO		
89456	KENWORTH	D	145089-200(1)
	PETERBILT		
89457	INTERNATIONAL (NAVISTAR)	W	Not Req'd.
89458	INTERNATIONAL (NAVISTAR)	D	Not Req'd.
89459	KENWORTH	C	401754(2)
	PETERBILT		
89460	KENWORTH	W	Not Req'd.
	PETERBILT		

GABRIEL PART #	APPLICATION	POP CODE	MTG ACC PKG #
89502	MACK	W	Not Req'd.
	POWERHOUSE COACH INC.		
	RENEGADE RV		
	VOLVO		
89503	DYNAMAX CORP (COUNTRY COACH)	W	Not Req'd.
	FEDERAL COACH		
	FREIGHTLINER		
	RENEGADE RV		
	STERLING TRUCK		
G63183	CHEVROLET	W	Not Req'd.
	DODGE TRUCK		
	FREIGHTLINER		
	HOLIDAY RAMBLER		
	JOHN DEERE		
	MOR-RYDE SUSPENSION		
	OSHKOSH MOTORS		
	VOLVO		
G63299	FORD	W	140885(1)
	INTERNATIONAL		
	MITSUBISHI-FUSO		
G63306	FORD	W	Not Req'd.
	INTERNATIONAL		
G63347	CHEVROLET	W	Not Req'd.
	GMC		
G63350	FORD	W	140126
G63355	CHALMERS SUSPENSION	W	140702
G63357	WATSON & CHALIN MFG. INC.	W	Not Req'd.
G63386	FORD	W	140780
	STERLING TRUCK		
G63387	FORD	W	140126
	STERLING TRUCK		
G63403	FREIGHTLINER	W	Not Req'd.
	VOLVO		
G63405	MITSUBISHI-FUSO	W	140884
G63406	FORD	W	Not Req'd.
G63409	FORD	W	Not Req'd.
G63419	HINO	W	Not Req'd.
G63432	INTERNATIONAL	W	141349 140169
	UD NISSAN		
G63455	FORD	W	Not Req'd.
G63461	FORD	W	Not Req'd.
G63500	FORD	W	140780
G63511	FORD	W	141353

GABRIEL PART #	APPLICATION	POP CODE	MTG ACC PKG #
G63524	FORD	W	Not Req'd.
G63525	FORD	W	Not Req'd.
G63605	DODGE TRUCK	W	140169
	FREIGHTLINER		
	JOHN DEERE		
	OSHKOSH MOTORS		
	VOLVO		
G63607	FORD	W	140719
G63608	FORD	W	140780
G63610	HINO	W	142389
	INTERNATIONAL		
	MITSUBISHI-FUSO		
	UD NISSAN		
G63614	FORD	W	140780

NUMERICAL LISTING
LISTA NUMÉRICA
LISTE NUMÉRIQUE

GABRIEL PART #	APPLICATION	POP CODE	MTG ACC PKG #
G63622	BERKSHIRE COACH	W	142617
	BLUE BIRD		
	CHAMPION BUS INC		
	COACH HOUSE		
	COACHMEN		
	COLLINS BUS CORP		
	DIAMOND COACH		
	DUTCHMEN RV		
	DYNAMAX CORP.		
	ELDORADO NATIONAL		
	ENTEGRA COACH		
	FEDERAL COACH		
	FLEETWOOD		
	FORD		
	FOREST RIVER		
	GEORGIE BOY MANUFACTURING		
	GLAVAL BUS CO.		
	GOSHEN COACH		
	GRECH MOTORS		
	GULF STREAM COACH		
	HOLIDAY RAMBLER		
	ITASCA		
	JAYCO RV INC		
	KRYSTAL BUS		
	LGE COACHWORKS		
	NEXUS RV		
	PHOENIX CRUISER RV		
	SHASTA RV		
	STARCRAFT BUS CO.		
	THOMAS SCHOOL BUS		
	THOR MOTOR COACH		
	TURTLETOP BUS		
	WHEELED COACH IND		
	WINNEBAGO		
	WORLD TRANS BUS CO.		

GABRIEL PART #	APPLICATION	POP CODE	MTG ACC PKG #
G63623	BERKSHIRE COACH	W	142617
	BLUE BIRD		
	CHAMPION BUS INC		
	COACH HOUSE		
	COACHMEN		
	COLLINS BUS CORP		
	DIAMOND COACH		
	DUTCHMEN RV		
	DYNAMAX CORP.		
	ELDORADO NATIONAL		
	ENTEGRA COACH		
	FEDERAL COACH		
	FLEETWOOD		
	FORD		
	FOREST RIVER		
	GEORGIE BOY MANUFACTURING		
	GLAVAL BUS CO.		
	GOSHEN COACH		
	GRECH MOTORS		
	GULF STREAM COACH		
	HOLIDAY RAMBLER		
	ITASCA		
	JAYCO RV INC		
	KRYSTAL BUS		
	LGE COACHWORKS		
	NEXUS RV		
	PHOENIX CRUISER RV		
	SHASTA RV		
	STARCRAFT BUS CO.		
	THOMAS SCHOOL BUS		
	THOR MOTOR COACH		
	TURTLETOP BUS		
	WHEELED COACH IND		
	WINNEBAGO		
	WORLD TRANS BUS CO.		
G63624	FORD	W	140780
G63625	VOLVO	W	140702
G63676	FORD	W	Not Req'd.
G63678	FORD	W	Not Req'd.
G63679	FORD	W	140719
G63714	FORD	W	142731
G63716	FORD	W	142731
G63772	FORD	W	141665
G63773	FORD	W	Not Req'd.

GABRIEL PART #	APPLICATION	POP CODE	MTG ACC PKG #
G63775	FORD	W	Not Req'd.
G63778	FORD	W	142700
G63808	FORD	W	Not Req'd.
G63809	FORD	W	Not Req'd.
	STERLING TRUCK		
G63810	FORD	W	Not Req'd.
G63837	FORD	W	Not Req'd.
G63866	MOR-RYDE SUSPENSION	W	Not Req'd.
	WORKHORSE		
G63929	FORD	W	140780
G63969	FORD	W	143146

Fleetline® ⇨ GasSLX® Interchange

Intercambio
Échange

Fleetline	GasSLX
83122	89406
83123	89405
83124	89407
83126	89430
83128	89436
83203	89436
83207	89407
83209	89414
83312	89409
83389	89436
83456	89447
85000	89436
85001	89410
85003	89411
85005	89430
85012	89413
85013	89414
85023	89415
85030	89440
85033	89427
85036	89405
85046	89434
85047	89435
85053	89442
85055	89439
85058	89431
85061	89450
85062	89408
85066	89448

Fleetline	GasSLX
85067	89451
85069	89455
85070	89459
85084	89460
85098	89502
85300	89419
85302	89420
85303	89422
85308	89422
85310	89423
85311	89424
85314	89425
85316	89426
85319	89428
85320	89429
85323	89436
85705	89447
85724	89443
85906	89407
85916	89430
85918	89449
85920	89503
85923	89458
85924	89457
85931	89458
85932	89453
85933	89454
85936	89456

IMPORTANT NOTE: Interchange must only be used for FLEETLINE to GASSLX upgrade. Interchange is NOT REVERSABLE.

NOTA IMPORTANTE: El intercambio se debe utilizar solamente de FLEETLINE a GASSLX mejorado. El intercambio NO ES REVERSIBLE.

REMARQUE IMPORTANTE: L'échange ne peut se faire que pour le surclassement du FLEETLINE au GASSLX. L'échange N'EST PAS REVERSIBLE.

Gabriel® HD
THE ORIGINAL

COMPETITIVE & O.E.M. INTERCHANGE LIST

Lista de Intercambios contra Competidores y Equipo Original.

Liste d'interchange de produits compétitifs & d'équipement original (OEM)

ABC BUS		
O.E.M #	Gabriel	Upgrade
50134513	85732	
12J510	85733	
12J-5-10	85733	
12L5114	85727	
12L-5-114	85727	
12L572	85709	
12L-5-72	85709	
12L588	85729	
12L-5-88	85729	
3166657	85700	
624313790	85708	
6243-13790	85708	
624314040	85708	
6243-14040	85708	
680323	85700	

AC DELCO		
O.E.M #	Gabriel	Upgrade
501-13	83318	
501-75	83303	
507-1	85304	
507-10	85711	
507-11	85308	89422
507-13	85704	
507-16	85702	
507-17	85304	
507-18	85305	
507-19	85700	
507-2	85302	89420
507-3	85307	
507-4	85303	89422
507-5	85308	89422
507-6	85314	89425
507-7	85301	
507-8	85301	
507-9	85700	
508-13	85012	89413
508-14	83216	
508-14	85012	89413
508-15	83216	
508-16	83308	
508-17	83312	89409
508-18	83309	
508-19	83314	
508-20	83207	89407
508-21	83214	
508-23	83225	
508-24	83215	
508-26	83203	89436
508-26	85030	89440
508-28	83207	89407
508-29	85030	89440
508-3	83400	
508-30	85005	89430
508-35	G63306	
508-39	G63347	
508-47	G63350	
508-48	G63409	
508-50	G63299	
508-52	G63405	
508-52	G63419	
508-56	G63605	
508-57	83123	89405
508-59	G63183	
508-68	83209	89414
508-68	85006	
508-71	83314	
508-72	G63386	
508-74	G63511	
508-78	83400	
508-86	83136	
508-87	85071	
508-9	85000	89436
508-90	83136	
550-13	85005	89430
550-73	83303	
550-73	85005	89430
550-75	83303	
550-77	83221	

ACF BRILL BUS		
O.E.M #	Gabriel	Upgrade
610513	85307	
631237	85308	89422
641521	85308	89422
649648	85308	89422
659129	85303	89422
661732	83215	
661733	83225	
995891	85307	

ADVANCE MIXER		
O.E.M #	Gabriel	Upgrade
12111 ADV	646155	
13424 ADV	83207	89407
13883	85334	
13883 ADV	85334	
14626 ADV	83209	89414
23458 ADV	83112	
680087	85334	
85334	85334	

ALLCO TRAILER		
O.E.M #	Gabriel	Upgrade
727602	83122	89406

ALLIANCE		
O.E.M #	Gabriel	Upgrade
ABP N32 G900001	85724	89443
ABP N32 G900002	83203	89436
ABP N32 G900003	85918	89449
ABP N32 G900004	85320	89429
ABP N32 G900005	85001	89410
ABP N32 G900006	83456	89447
ABP N32 G900007	83125	
ABP N32 G900008	83001	
ABP N32 G900009	85006	
ABP N32 G900010	85013	89414
ABP N32 G900011	85323	89436
ABP N32 G900012	83038	
ABP N32 G900013	85931	89458
ABP N32 G900014	83009	
ABP N32 G900015	83128	89436
ABP N32 G900016	85319	89428
ABP N32 G900017	85736	
ABP N32 G900018	83021	
ABP N32 G900019	85062	89408
ABP N32 G900020	85067	89451
ABP N32 G900021	85070	89459
ABP N32 G900022	85003	89411
ABP N32 G900024	85901	
ABP N32 G900025	83017	

COMPETITIVE & O.E.M. INTERCHANGE LIST
Lista de Intercambios contra Competidores y Equipo Original.
Liste d'interchange de produits compétitifs & d'équipement original (OEM)

ABP N32 G900027	85331	
ABP N32 G900028	85000	89436
ABP N32 G900030	83127	
ABP N32 G900031	85311	89424
ABP N32 G900032	85066	89448
ABP N32 G900033	85023	89415
ABP N32 G900034	85310	89423
ABP N32 G900035	85924	89457
ABP N32 G900036	83124	89407
ABP N32 G900037	85052	
ABP N32 G900038	85069	89455
ABP N32 G900039	85033	89427
ABP N32 G900040	85061	89450
ABP N32 G900041	85937	
ABP N32 G900043	85316	89426
ABP N32 G900044	85954	
ABP N32 G900046	85045	
ABP N32 G900047	85900	
ABP N32 G900049	85957	
ABP N32 G900050	83135	
ABP N32 G900051	83317	
ABP N32 G900053	85938	
ABP N32 G900054	85005	89430
ABP N32 G900055	83008	
ABP N32 G900056	83126	89430
ABP N32 G900058	85936	89456
ABP N32 G900061	85072	
ABP N32 G900063	83031	
ABP N32 G900068	85047	89435
ABP N32 G900069	83147	
ABP N32 G900071	83112	
ABP N32 G900072	85926	
ABP N32 G900073	85058	89431
ABP N32 G900074	85933	89454
ABP N32 G900075	85919	
ABP N32 G900076	85012	89413
ABP N32 G900077	85958	
ABP N32 G900078	85088	
ABP N32 G900079	85934	
ABP N32 G900080	85098	89502
ABP N32 G900081	85920	89503
ABP N32 G900082	85738	
ABP N32 G900083	85029	
ABP N32 G900085	83207	89407
ABP N32 G900086	85064	
ABP N32 G900087	85030	89440

ABP N32 G900088	83035	
ABP N32 G900089	85932	89453
ABP N32 G900090	85053	89442
ABP N32 G900091	83396	
ABP N32 O900001	85724	89443
ABP N32 O900002	83203	89436
ABP N32 O900003	85918	89449
ABP N32 O900004	85320	89429
ABP N32 O900005	85001	89410
ABP N32 O900006	83456	89447
ABP N32 O900007	83125	
ABP N32 O900008	83001	
ABP N32 O900009	85006	
ABP N32 O900010	85013	89414
ABP N32 O900011	85323	89436
ABP N32 O900012	83038	
ABP N32 O900013	85931	89458
ABP N32 O900014	83009	
ABP N32 O900015	83128	89436
ABP N32 O900016	85319	89428
ABP N32 O900017	85736	
ABP N32 O900018	83021	
ABP N32 O900019	85062	89408
ABP N32 O900020	85067	89451
ABP N32 O900021	85070	89459
ABP N32 O900022	85003	89411
ABP N32 O900024	85901	
ABP N32 O900025	83017	
ABP N32 O900027	85331	
ABP N32 O900028	85000	89436
ABP N32 O900029	646155	
ABP N32 O900030	83127	
ABP N32 O900031	85311	89424
ABP N32 O900032	85066	89448
ABP N32 O900033	85023	89415
ABP N32 O900034	85310	89423
ABP N32 O900035	85924	89457
ABP N32 O900036	83124	89407
ABP N32 O900037	85052	
ABP N32 O900038	85069	89455
ABP N32 O900039	85033	89427
ABP N32 O900040	85061	89450
ABP N32 O900041	85937	
ABP N32 O900043	85316	89426
ABP N32 O900044	85954	
ABP N32 O900046	85045	
ABP N32 O900047	85900	
ABP N32 O900049	85957	

ABP N32 O900050	83135	
ABP N32 O900051	83317	
ABP N32 O900053	85938	
ABP N32 O900054	85005	89430
ABP N32 O900055	83008	
ABP N32 O900056	83126	89430
ABP N32 O900058	85936	89456
ABP N32 O900061	85072	
ABP N32 O900063	83031	
ABP N32 O900068	85047	89435
ABP N32 O900069	83147	
ABP N32 O900071	83112	
ABP N32 O900072	85926	
ABP N32 O900073	85058	89431
ABP N32 O900074	85933	89454
ABP N32 O900075	85919	
ABP N32 O900076	85012	89413
ABP N32 O900077	85958	
ABP N32 O900078	85088	
ABP N32 O900079	85934	
ABP N32 O900080	85098	89502
ABP N32 O900081	85920	89503
ABP N32 O900082	85738	
ABP N32 O900083	85029	
ABP N32 O900084	85959	
ABP N32 O900085	83207	89407
ABP N32 O900086	85064	
ABP N32 O900087	85030	89440
ABP N32 O900088	83035	
ABP N32 O900089	85932	89453
ABP N32 O900090	85053	89442
ABP N32 O900091	83396	

AM GENERAL		
O.E.M #	Gabriel	Upgrade
3166657	85700	
4975501	85700	
5565748	85700	
5957136	85700	
5969438	85700	
5978712	85700	
5979484	85302	89420
5979574	85700	
5982537	85700	

COMPETITIVE & O.E.M. INTERCHANGE LIST

Lista de Intercambios contra Competidores y Equipo Original.

Liste d'interchange de produits compétitifs & d'équipement original (OEM)

ARALMEX		
O.E.M #	Gabriel	Upgrade
3AMG001	G63355	
3AMG004	G63306	
3AMG007	G63357	
3AMG008	G63500	
3AMG009	G63406	
3AMG021	G63409	
3AMG026	G63455	
3AMG033	G63614	
3AMG034	G63608	
3AMG035	G63607	

ARVIN MERITOR		
O.E.M #	Gabriel	Upgrade
085009	85009	
085014	85014	
085321	85321	
654907	85000	89436
654958	83164	
665044	83209	89414
665724	85000	89436
665746	85000	89436
665760	85045	
665769	85052	
665804	85939	
671091	85069	89455
671092	85012	89413
671507	87015	
671707	85323	89436
680102	85712	
680322	85704	
680331	85702	
680337	85708	
680347	85732	
680464	85005	89430
680518	85700	
680584	85938	
680671	85708	
695180	85705	89447
695214	85722	
695348	87018	
727600	89402	
727607	83207	89407
727609	83209	89414
727614	83214	
727615	83215	
727616	83216	
727619	83219	
727625	83225	
727628	83301	
727630	83303	
727635	83308	
727636	83309	
727639	83312	89409
727641	83314	
727645	83318	
727671	83613	
727672	83242	
728601	85001	89410
728603	85003	89411
728604	85300	89419
728606	85302	89420
728608	85304	
728609	85305	
728611	85307	
728612	85308	89422
728614	85310	89423
728615	85311	89424
728616	85004	
728617	85005	89430
728618	85006	
728619	85007	
728621	85009	
728622	85010	
728624	85012	89413
728625	85013	89414
728626	85312	
728628	85314	89425
728631	85029	
728632	85030	89440
728635	85318	
728639	85026	
728640	85027	
728800	85711	
728806	85736	
728812	85705	89447
7805N1002	85329	
7805-N-1002	85329	
7805S1007	85329	
7805-S-1007	85329	

AUTOCAR LLC.		
O.E.M #	Gabriel	Upgrade
60657003	85072	
60657-003	85072	
60657003L	85072	
60657-003L	85072	
60665011	85967	
60665-011	85967	
60680003	83112	
60680-003	83112	
60680003L	83112	
60680-003L	83112	
60680004	83143	
60680-004	83143	
60680004L	83143	
60680-004L	83143	
60680005	83142	
60680-005	83142	
60680005L	83142	
60680-005L	83142	
800670	85060	
800781	85314	89425
031106460	85005	89430
03-1106460	85005	89430
1011839	83216	
28CFG910	83216	
28CFG-910	83216	
28CFG910Z	83216	
28CFG-910Z	83216	
28R010	83216	
359013201	85024	
35901-3201	85024	
373013201	85027	
37301-3201	85027	
373013202	85026	
37301-3202	85026	
3946210	83103	
60665013	85965	

COMPETITIVE & O.E.M. INTERCHANGE LIST
Lista de Intercambios contra Competidores y Equipo Original.
Liste d'interchange de produits compétitifs & d'équipement original (OEM)

60665-013	85965	
60665025	85036	89405
60665-025	85036	89405
60665025L	85036	89405
60665-025L	85036	89405
60670005	83137	
60670-005	83137	
60670005L	83137	
60670-005L	83137	
60675003	85976	
60675-003	85976	
60675003L	85976	
60675-003L	85976	
660186	83216	
8026658	85046	89434
8071524	85024	
849246	83216	
A3730008001	85086	
A3730008-001	85086	

BATCO		
O.E.M #	Gabriel	Upgrade
1083203	83203	89436
1083204	83204	
1083207	83207	89407
1083209	83209	89414
1083225	83225	
1083310	83221	
1083317	83317	
1085003	85003	89411
1085005	85005	89430
1085007	85007	
1085300	85300	89419
1085301	85301	
1085305	85305	
1085308	85308	89422
1085311	85311	89424
1087001	85734	
1087006	85736	

BECK BUS		
O.E.M #	Gabriel	Upgrade
14QK140	85304	
14QK-140	85304	
14QK2102	85304	
14QK-2102	85304	

BENSON TRUCK BODIES INC.		
O.E.M #	Gabriel	Upgrade
90044089	83124	89407
A20002	85000	89436
A-20002	85000	89436

BERING TRUCK CORP.		
O.E.M #	Gabriel	Upgrade
4790224	83137	
47902-24	83137	

BERKSHIRE COACH		
O.E.M #	Gabriel	Upgrade
ASH1136	G63623	
ASH-1136	G63623	
ASH1154	G63622	
ASH-1154	G63622	

BILSTEIN		
O.E.M #	Gabriel	Upgrade
14-186629	85125	
24-015943	85013	89414
24-017329	85030	89440
24-153249	85125	
24-153256	85124	
24-186414	85029	
B46-1594	85013	89414
B46-1725	85029	
B46-1732	85030	89440
B46-2151	85007	
F4-B46-1594-H0	85013	89414
F4-B46-1725-H2	85029	
F4-B46-1732-H1	85030	89440
F4-BE5-B492-H0	85125	
F4-BE5-F324-H0	85125	
F4-BE5-F325-H0	85124	

BLUE BIRD		
O.E.M #	Gabriel	Upgrade
00020317	85036	89405
00085991	85006	
00110808	83124	89407
00119797	85959	
00119798	85106	
0014605	85036	89405
0014985	83137	
0015222	85919	
0020326	85976	
0040015	85919	
0055008	85959	
0055017	85959	
00614966	85307	
0075916	85086	
0085990	85959	
0088035	85090	
0106303	85106	
01722214	85030	89440
0523047	85736	
060665-003	83137	
060665-004	85036	89405
0823054	85304	
1004167	85712	
1217934	85304	
1316546	85006	
1317767	85029	
1526417	85052	
1658533	85010	
1667831	85029	
1668722	85030	89440
1668730	85013	89414
1707405	85005	89430
1722222	85013	89414
1746163	85006	
1750793	85712	
1962422	85304	
1962430	83207	89407
2021459	85012	89413
2310601	89430	
23106-01	89430	
3000614966	85307	
300-0614966	85307	
3000614974	85304	
300-0614974	85304	
3000823047	85736	
300-0823047	85736	
3000823054	85304	
300-0823054	85304	

COMPETITIVE & O.E.M. INTERCHANGE LIST

Lista de Intercambios contra Competidores y Equipo Original.

Liste d'interchange de produits compétitifs & d'équipement original (OEM)

30009612284	85734	
300-09612284	85734	
3001316546	85006	
300-1316546	85006	
3001317767	85029	
300-1317767	85029	
3031350628	85712	
303-1350628	85712	
3050961284	85734	
305-0961284	85734	
471700000428	85006	
471700000456	85959	
471700000464	85090	
471700002919	85106	
471700131545	85006	
4759272	89447	
4760958	85086	
481700131438	85919	
58913007	85959	
58913-007	85959	
58913007L	85959	
58913-007L	85959	
58913008	85959	
58913-008	85959	
58913008L	85959	
58913-008L	85959	
58913009	85959	
58913-009	85959	
58913009L	85959	
58913-009L	85959	
58913010	85106	
58913-010	85106	
58913010L	85106	
58913-010L	85106	
58913011	85959	
58913-011	85959	
58913011L	85959	
58913-011L	85959	
59057001	83137	
59057-001	83137	
59057002	85036	89405
59057-002	85036	89405
59483000	85919	
59483-000	85919	
60665003	83137	
60665-004	85036	89405
60665005	85919	
60665-005	85919	
60665005L	85919	
60665-005L	85919	
609180	85304	
60998001	85006	
60998-001	85006	
60998002	85919	
60998-002	85919	
60998002L	85919	
60998-002L	85919	
60998003	85006	
60998-003	85006	
614958	85307	
614974	85304	
65992003	85959	
65992-003	85959	
65992004	85106	
65992-004	85106	
671933	85919	
680102	85712	
680155	85712	
680667	89447	
680783	85304	
70317	89402	
70397	85006	
7805M1001	85919	
7805-M-1001	85919	
7805N1002	85329	
7805-N-1002	85329	
7805S1007	85329	
7805-S-1007	85329	
8700101A	85734	
87001-01A	85734	
8C2418045DA	G63622	
8C24-18045-DA	G63622	
8C2418080DB	G63623	
8C24-18080-DB	G63623	
8C2Z18124D	G63622	
8C2Z-18124-D	G63622	
8C2Z18125D	G63623	
8C2Z-18125-D	G63623	
90044448	85051	
90044915	83127	
90045083	85910	
901813	85712	
90-1813	85712	
901951SP1	85734	
90-1951-SP1	85734	
901968	85712	
90-1968	85712	
901968SP1	85712	
90-1968-SP1	85712	
A4890	85712	
A-4890	85712	
AMS65109	85058	89431
AMS65110	85005	89430
AMS65119	85029	
ASH1136	G63623	
ASH-1136	G63623	
ASH1154	G63622	
ASH-1154	G63622	
AT163G	G63622	
AT-163G	G63622	
AT164G	G63623	
AT-164G	G63623	

BOGE		
O.E.M #	Gabriel	Upgrade
40-A85-0	85708	

BOYSTUN EQUIPMENT MAN.		
O.E.M #	Gabriel	Upgrade
1253069B000	85005	89430

BROCKWAY SCHOOL BUS		
O.E.M #	Gabriel	Upgrade
14QK281P10	85305	
14QK-281P10	85305	

COMPETITIVE & O.E.M. INTERCHANGE LIST

Lista de Intercambios contra Competidores y Equipo Original.

Liste d'interchange de produits compétitifs & d'équipement original (OEM)

14QK282P1	83216	
14QK-282P1	83216	
14QK282P3	83216	
14QK-282P3	83216	
152398	85304	
152412	83215	
508657	85307	
515231	85303	89422
530873	83207	89407
532397	85307	

BUILT RITE		
O.E.M #	Gabriel	Upgrade
31806100	85006	
318-06-100	85006	
70039	85303	89422
70041	85305	

BULL DOG		
O.E.M #	Gabriel	Upgrade
HD1113-0406	83400	
HD1114-0257	83026	
HD1114-0258	83169	
HD1116-0033	85311	89424
HD1116-0034	85711	
HD1116-0036	85736	
HD1116-0041	85300	89419
HD1116-0043	85303	89422
HD1116-0044	85302	89420
HD1116-0045	85712	
HD1116-0046	85702	
HD1116-0047	85304	
HD1116-0048	85711	
HD1116-0049	85729	
HD1116-0050	85970	
HD1116-0051	85341	
HD1116-0052	85727	
HD1116-0059	85332	
HD1213-0651	83021	
HD1213-0652	83031	
HD1213-0674	83401	
HD1213-0679	83023	
HD1213-0680	83017	
HD1213-0705	85006	
HD1213-0707	83034	
HD1214-0496	83041	
HD1214-0497	83054	
HD1214-0499	85045	
HD1214-0500	83128	89436
HD1214-0507	646155	
HD1214-0508	83203	89436
HD1214-0526	83613	
HD1214-0528	83112	
HD1214-0530	83123	89405
HD1214-0531	83130	
HD1214-0532	83125	
HD1214-0533	83124	89407
HD1214-0534	83127	
HD1214-0535	83009	
HD1214-0536	83042	
HD1214-0537	83051	
HD1214-0538	83038	
HD1214-0539	83126	89430
HD1214-0540	83029	
HD1214-0540	83515	
HD1214-0541	83019	
HD1214-0542	85052	
HD1214-0544	83001	
HD1214-0545	83456	89447
HD1214-0546	83008	
HD1214-0550	83314	
HD1214-0551	83126	89430
HD1214-0553	83045	
HD1214-0554	83048	
HD1214-0556	83136	
HD1214-0557	83101	
HD1214-0558	83169	
HD1214-0559	83309	
HD1214-0560	83141	
HD1214-0561	85071	
HD1214-0562	83312	89409
HD1214-0563	83215	
HD1214-0564	83312	89409
HD1214-0565	83110	
HD1214-0566	83123	89405
HD1214-0567	83215	
HD1214-0568	83225	
HD1214-0568	85007	
HD1214-0569	83035	
HD1214-0570	89430	
HD1214-0571	83159	
HD1214-0572	83163	
HD1214-0573	83025	
HD1214-0574	83103	
HD1214-0576	83029	
HD1214-0579	83221	
HD1214-0580	83209	89414
HD1214-0593	83120	
HD1214-0595	83308	
HD1214-0595	89435	
HD1214-0597	85066	89448
HD1214-0602	83120	
HD1214-0603	83150	
HD1214-0605	85012	89413
HD1214-0607	83154	
HD1214-0608	83303	
HD1214-0609	85310	89423
HD1214-0610	83027	
HD1214-0611	83134	
HD1214-0612	85033	89427
HD1214-0613	83022	
HD1214-0614	83015	
HD1214-0636	83047	
HD1214-0637	83059	
HD1214-0639	83004	
HD1214-0640	83216	
HD1214-0641	83216	
HD1214-0642	83135	
HD1214-0644	83635	
HD1214-0645	83119	
HD1214-0655	83130	
HD1214-0656	83103	
HD1214-0657	83164	
HD1214-0658	83308	
HD1214-0658	89435	
HD1214-0660	83107	
HD1214-0661	83318	
HD1215-0018	85724	89443

COMPETITIVE & O.E.M. INTERCHANGE LIST

Lista de Intercambios contra Competidores y Equipo Original.

Liste d'interchange de produits compétitifs & d'équipement original (OEM)

HD1215-0020	85070	89459
HD1215-0021	85901	
HD1215-0022	85928	
HD1215-0022	85957	
HD1215-0023	85031	
HD1215-0024	85918	89449
HD1215-0024	85920	89503
HD1215-0025	85918	89449
HD1215-0025	85958	
HD1215-0026	85331	
HD1215-0027	85924	89457
HD1215-0028	85003	89411
HD1215-0029	85320	89429
HD1215-003	85033	89427
HD1215-0030	85066	89448
HD1215-0030	85088	
HD1215-0031	85069	89455
HD1215-0032	85062	89408
HD1215-0033	85311	89424
HD1215-0034	85067	89451
HD1215-0036	85001	89410
HD1215-0038	85023	89415
HD1215-0039	85000	89436
HD1215-0040	83128	89436
HD1215-0041	85923	89458
HD1215-0041	85931	89458
HD1215-0042	85014	
HD1215-0042	85906	89407
HD1215-0043	85013	89414
HD1215-0044	85046	89434
HD1215-0045	85013	89414
HD1215-0046	85045	
HD1215-0046	85939	
HD1215-0047	85934	
HD1215-0048	85084	89460
HD1215-0048	85989	
HD1215-0049	85047	89435
HD1215-0051	85026	
HD1215-0051	85081	
HD1215-0052	85316	89426
HD1215-0053	85933	89454
HD1215-0054	85909	
HD1215-0055	85926	
HD1215-0056	85012	89413
HD1215-0058	85053	89442
HD1215-0059	83123	89405
HD1215-0060	85959	
HD1215-0061	85012	89413
HD1215-0062	85910	
HD1215-0063	83317	
HD1215-0064	85319	89428
HD1215-0065	85937	
HD1215-0066	85029	
HD1215-0067	83111	
HD1215-0069	85072	
HD1215-0071	85005	89430
HD1215-0072	85938	
HD1215-0073	85976	
HD1215-0074	85061	89450
HD1215-0074	85098	89502
HD1215-0075	85052	
HD1215-0076	85069	89455
HD1215-0077	85900	
HD1215-0078	85036	89405
HD1215-0079	85919	
HD1215-0080	85954	
HD1215-0081	83136	
HD1215-0082	85311	89424
HD1215-0083	85978	
HD1215-0084	83135	
HD1215-0084	83163	
HD1215-0085	85310	89423
HD1215-0086	85936	89456
HD1215-0088	85006	
HD1215-0089	85303	89422
HD1215-0090	85972	
HD1215-0091	85321	
HD1215-0091	85916	89430
HD1215-0092	85916	89430
HD1215-0093	83209	89414
HD1215-0094	83142	
HD1215-0095	83175	
HD1215-0096	85029	
HD1215-0097	85300	89419
HD1215-0100	85925	
HD1215-0102	85938	
HD1215-0103	85932	89453
HD1215-0104	85956	
HD1215-0106	85323	89436
HD1215-0106	85738	
HD1215-0107	85001	89410
HD1215-0108	85030	89440
HD1215-0108	89432	
HD1215-0109	85065	
HD1215-0110	83122	89406
HD1215-0111	85043	
HD1215-0113	85736	
HD1215-0114	85058	89431
HD1215-0115	85058	89431
HD1215-0115	89450	
HD1215-0116	85058	89431
HD1215-0117	85910	
HD1215-0118	83160	
HD1215-0119	85954	
HD1215-0122	85090	
HD1215-0123	83131	
HD1215-0124	85024	
HD1215-0125	85080	
HD1215-0125	85081	
HD1215-0126	85376	
HD1215-0127	85082	
HD1215-0128	85054	
HD1215-0129	85967	
HD1215-0132	83143	
HD1215-0133	83122	89406
HD1215-0134	89402	
HD1215-0135	85040	
HD1215-0136	85102	
HD1215-0147	85927	
HD1215-0148	85181	
HD1215-0149	85700	
HD1215-0150	85029	
HD1215-0151	85010	
HD1215-0152	83144	
HD1215-0154	85995	
HD1215-0156	83136	
HD1215-0157	85030	89440
HD1215-0160	85125	
HD1215-0161	85929	
HD1215-0165	85338	
HD1216-0005	87015	
HD1294-0002	632147	
HD5115-0001	665937	

COMPETITIVE & O.E.M. INTERCHANGE LIST
Lista de Intercambios contra Competidores y Equipo Original.
Liste d'interchange de produits compétitifs & d'équipement original (OEM)

BUS & TRUCK CO.		
O.E.M #	Gabriel	Upgrade
680091	85303	89422
70039	85303	89422
70041	85305	

CARGOMAXX		
O.E.M #	Gabriel	Upgrade
441 - 646155	646155	
441 - 65514	89405	
441 - 83001	83001	
441 - 83008	83008	
441 - 83009	83009	
441 - 83021	83021	
441 - 83025	83025	
441 - 83031	83031	
441 - 83038	83038	
441 - 83041	83041	
441 - 83042	83042	
441 - 83048	83048	
441 - 83051	83051	
441 - 83110	83110	
441 - 83111	83111	
441 - 83112	83112	
441 - 83122	83122	89406
441 - 83123	83123	89405
441 - 83124	83124	89407
441 - 83125	83125	
441 - 831266833	83126	89430
441 - 831266897	83126	89430
441 - 831266969	83126	89430
441 - 83127	83127	
441 - 83128	83128	89436
441 - 83130	83130	
441 - 83136	83136	
441 - 83142	83142	
441 - 83143	83143	
441 - 83156	83169	
441 - 831635143	83163	
441 - 831636422	83163	
441 - 832036634	83203	89436
441 - 832036893	83203	89436
441 - 83209	83209	89414
441 - 83215	83215	
441 - 83221	83221	

441 - 83309	83309	
441 - 833126668	83312	89409
441 - 833126811	83312	89409
441 - 83317	83317	
441 - 83456	83456	89447
441 - 83515	83515	
441 - 83613	83613	
441 - 850005416	85000	89436
441 - 850005419	85000	89436
441 - 85001	85001	89410
441 - 85003	85003	89411
441 - 85005	85005	89430
441 - 850065482	85006	
441 - 850065505	85006	
441 - 85012	85012	89413
441 - 850125113	85012	89413
441 - 850135401	85013	89414
441 - 850135420	85013	89414
441 - 85023	85023	89415
441 - 85024	85024	
441 - 85026	85026	
441 - 85029	85029	
441 - 850295451	85029	
441 - 85030	85030	89440
441 - 85031	85031	
441 - 85033	85033	89427
441 - 850365411	85036	89405
441 - 850365481	85036	89405
441 - 85045	85045	
441 - 85046	85046	89434
441 - 85047	85047	89435
441 - 850525510	85052	
441 - 850526607	85052	
441 - 85053	85053	89442
441 - 850585109	85058	89431
441 - 850585478	85058	89431
441 - 85061	85061	89450
441 - 85062	85062	89408
441 - 85066	85066	89448
441 - 85067	85067	89451
441 - 850695468	85069	89455
441 - 850695528	85069	89455
441 - 85070	85070	89459
441 - 85072	85072	
441 - 85084	85084	89460
441 - 85090	85090	
441 - 85119	85119	
441 - 85300	85300	89419
441 - 853006861	85300	89419

441 - 85302	85302	89420
441 - 85303	85303	89422
441 - 85310	85310	89423
441 - 853104409	85310	89423
441 - 853114417	85311	89424
441 - 853115402	85311	89424
441 - 853115444	85311	89424
441 - 85316	85316	89426
441 - 85319	85319	89428
441 - 85320	85320	89429
441 - 85321	85321	
441 - 85323	85323	89436
441 - 85724	85724	89443
441 - 85736	85736	
441 - 85738	85738	
441 - 85900	85900	
441 - 85901	85901	
441 - 85906	85906	89407
441 - 85909	85909	
441 - 85910	85910	
441 - 859185140	85918	89449
441 - 859185148	85918	89449
441 - 85919	85919	
441 - 85924	85924	89457
441 - 85925	85925	
441 - 85926	85926	
441 - 85931	85931	89458
441 - 85932	85932	89453
441 - 85933	85933	89454
441 - 85934	85934	
441 - 85936	85936	89456
441 - 85937	85937	
441 - 85938	85938	
441 - 85939	85939	
441 - 85954	85954	
441 - 85956	85956	
441 - 85957	85957	
441 - 85959	85959	
441 - 85972	85972	
441 - 85976	85976	
441 - 85978	85978	
441 - 87015	87015	

CARPENTER BUS		
O.E.M #	Gabriel	Upgrade
0272SS5	85712	

COMPETITIVE & O.E.M. INTERCHANGE LIST

Lista de Intercambios contra Competidores y Equipo Original.

Liste d'interchange de produits compétitifs & d'équipement original (OEM)

0272-SS5	85712	
630001	85713	
63-0001	85713	

CASCADE TRAILER		
O.E.M #	Gabriel	Upgrade
1201	83125	
120-1	83125	

CATERPILLAR		
O.E.M #	Gabriel	Upgrade
060665-011	85967	
60657003	85072	
60657-003	85072	
60657003L	85072	
60657-003L	85072	
60665011	85967	
60665-011	85967	
60665-011L	85967	
60680004	83143	
60680-004	83143	
60680004L	83143	
60680-004L	83143	
60680005	83142	
60680-005	83142	
60680005L	83142	
60680-005L	83142	
H60680004	83143	
HDR60680005	83142	
HDR60680-005	83142	

CHALLENGE COOK		
O.E.M #	Gabriel	Upgrade
1540212	646155	
1540459	646155	
632147	632147	
632155	646177	

CHALMERS SUSPENSION		
O.E.M #	Gabriel	Upgrade
21335	G63355	
665174	85060	
800670	85060	
800781	85314	89425
K800199	85060	
K880233	85060	
K880247	85060	
K880248	85314	89425
K880642	85060	

CHAMPION BUS INC.		
O.E.M #	Gabriel	Upgrade
22064230	83136	
8C2418045DA	G63622	
8C24-18045-DA	G63622	
8C2418080DB	G63623	
8C24-18080-DB	G63623	
8C2Z18124D	G63622	
8C2Z-18124-D	G63622	
8C2Z18125D	G63623	
8C2Z-18125-D	G63623	
ASH1136	G63623	
ASH-1136	G63623	
ASH1154	G63622	
ASH-1154	G63622	
AT163G	G63622	
AT-163G	G63622	
AT164G	G63623	
AT-164G	G63623	

CHANCE COACH		
O.E.M #	Gabriel	Upgrade
2021459	85012	89413
2706708	85014	
270-6708	85014	
59039	83207	89407
665017	85014	
6892	83207	89407
6893	83203	89436
728600	83203	89436
AS789B	85014	

CHEVROLET		
O.E.M #	Gabriel	Upgrade
12010054	83021	
1201-0054	83021	
12020012	83023	
1202-0012	83023	
12020032	83016	
1202-0032	83016	
12020054	83021	
1202-0054	83021	
12474915	83122	89406
12474917	83137	
15123676	83136	
1516301681	83515	
1-51630-168-1	83515	
1-51630-217-0	83114	
1-51630-217-1	83114	
1-51630-219-1	83114	
15174898	83136	
15174902	85071	
15588554	83136	
15740554	83137	
15887728	83136	
15963161	83122	89406
19152843	83136	
22002293	83126	89430
22002295	83303	
22007700	83207	89407
22007701	83126	89430
22007703	83303	
22007750	83207	89407
22007751	83303	
22007753	83303	
22012065	85304	
22012067	85700	
22012082	85702	
22012083	85711	
22012090	85308	89422
22012091	85303	89422
22012095	83126	89430
22012096	83221	
22012114	85700	
22012131	85711	
22012166	83126	89430
22012169	83221	
22012196	83221	
22017530	83303	

COMPETITIVE & O.E.M. INTERCHANGE LIST
Lista de Intercambios contra Competidores y Equipo Original.
Liste d'interchange de produits compétitifs & d'équipement original (OEM)

22017531	83303	
22045526	85702	
22046481	85702	
22046483	85304	
22046489	85303	89422
2204683	85304	
22052014	85702	
22052336	85304	
22064230	83136	
22064232	85071	
22064233	83136	
22064432	83221	
22064804	83136	
22064805	83136	
22064806	83136	
22064807	83136	
22065218	G63347	
22065251	85030	89440
22165187	83136	
22165188	83136	
22165189	83136	
22166442	83136	
3171068	83216	
3171069	85304	
3171462	83126	89430
3171696	85307	
3172948	85303	89422
3178157	85700	
3178233	85734	
3178507	85700	
3178995	85700	
3188626	85300	89419
3188729	85303	89422
3192657	83216	
3192890	83126	89430
3192892	83221	
4089293C1	83397	
4109458C2	83243	
4109582C1	83397	
4206863C1	83398	
4207304C1	83397	
4208946C1	83398	

4214011C2	85670	
4939852	85308	89422
4939967	85308	89422
4940600	83209	89414
4940601	83216	
4940606	83126	89430
4940614	83216	
4940627	83203	89436
4940640	83216	
4940650	83207	89407
4940654	83216	
4940660	83207	89407
4940662	83126	89430
4963844	85307	
4963853	83216	
4963854	83216	
4974401	85700	
4975429	85300	89419
4975467	83207	89407
4975479	83400	
4975480	83400	
4975494	83207	89407
4975497	83126	89430
4975510	83221	
4975516	85702	
4975518	85704	
4975538	85700	
4975549	83216	
4975550	85702	
4984526	83216	
5073	85307	
507-3	85307	
50886	83136	
508-86	83136	
5171068	83216	
5316784	85700	
5316791	83219	
5316792	85305	
5316793	85305	
5321920	85307	
5321929	85307	
5348631	83203	89436
5352858	85305	
5353054	85303	89422

5355798	85307	
5357955	85300	89419
5357956	85734	
5357959	85300	89419
5361994	85734	
5374779	85308	89422
5374999	85307	
5385939	85307	
5392387	85303	89422
5394448	85305	
5394467	85305	
5455798	85307	
5513489	83216	
5513716	85304	
5516459	85305	
5522794	85308	89422
5522818	85305	
5527001	85300	89419
5527271	85700	
5527272	85700	
5527606	85305	
5531027	85301	
5531435	85307	
5531436	85307	
5531437	85307	
5532026	85304	
5532425	83207	89407
5532433	83207	89407
5532675	85307	
5534430	85303	89422
5534439	85304	
5534447	85303	89422
5544060	85302	89420
5544112	83216	
5544581	85302	89420
5544716	85304	
5544717	85304	
5544812	83308	
5549899	83207	89407
5549924	85700	
5549925	85304	
5552111	85304	
5552112	85307	
5552114	83216	

COMPETITIVE & O.E.M. INTERCHANGE LIST

Lista de Intercambios contra Competidores y Equipo Original.

Liste d'interchange de produits compétitifs & d'équipement original (OEM)

5552206	83214	
5552209	83215	
5552210	85308	89422
5552244	85308	89422
5552285	83214	
5552451	85308	89422
5552452	85303	89422
5552453	85301	
5552456	85307	
5552552	85303	89422
5554184	85302	89420
5554589	85307	
5554596	85303	89422
5554814	85302	89420
5554959	83401	
5554995	85305	
5559363	83203	89436
5585939	85307	
684280	83209	89414
88982682	83136	
88982684	83136	
88982686	85071	
8940575930	83114	
8-94057-593-0	83114	
8944549860	83515	
8-94454-986-0	83515	
8944549870	83515	
8-94454-987-0	83515	
8972019600	83515	
8-97201-960-0	83515	
94033786	83114	
94051090	83114	
94057593	83114	
94454987	83515	
9516306471	83515	
9-51630-647-1	83515	
9516306660	85012	89413
9-51630-666-0	85012	89413
9516306662	85012	89413
9-51630-666-2	85012	89413
97083027	83515	
97083029	83515	
97201960	83515	
97221000164	85708	
97-2210-00164	85708	
97221000170	85733	
97-2210-00170	85733	

CHRYSLER		
O.E.M #	Gabriel	Upgrade
2961043	G63183	
3633744	G63183	
3638112	G63183	

CLARK EQUIPMENT		
O.E.M #	Gabriel	Upgrade
355778	85315	
5532675	85307	
680042	85301	

CNH GLOBAL NV.		
O.E.M #	Gabriel	Upgrade
87019546	83022	
87268250	83021	

COACH HOUSE		
O.E.M #	Gabriel	Upgrade
8C2418045DA	G63622	
8C24-18045-DA	G63622	
8C2418080DB	G63623	
8C24-18080-DB	G63623	
8C2Z18124D	G63622	
8C2Z-18124-D	G63622	
8C2Z18125D	G63623	
8C2Z-18125-D	G63623	
ASH1136	G63623	
ASH-1136	G63623	
ASH1154	G63622	
ASH-1154	G63622	
AT163G	G63622	
AT-163G	G63622	
AT164G	G63623	
AT-164G	G63623	

COACHMEN		
O.E.M #	Gabriel	Upgrade
141700131809	85029	
141700131810	83160	
1616736000	85029	
16-16736-000	85029	
1616737000	83160	
16-16737-000	83160	
1616873000	85029	
16-16873-000	85029	
1616874000	83160	
16-16874-000	83160	
1618103000	85900	
16-18103-000	85900	
1C3418045AA	83209	89414
1C34-18045-AA	83209	89414
1C3418045JA	83209	89414
1C34-18045-JA	83209	89414
481700000493	85900	
66153002	83124	89407
66153-002	83124	89407
8C2418045DA	G63622	
8C24-18045-DA	G63622	
8C2Z18124D	G63622	
8C2Z-18124-D	G63622	
9U9418045AA	83209	89414
9U94-18045-AA	83209	89414
9U9418080AA	83122	89406
9U94-18080-AA	83122	89406
9U9Z18124A	83209	89414
9U9Z-18124-A	83209	89414
9U9Z18125A	83122	89406
9U9Z-18125-A	83122	89406
ASH1022	83209	89414
ASH-1022	83209	89414
ASH1023	83122	89406
ASH-1023	83122	89406
ASH1154	G63622	
ASH-1154	G63622	
ASH1205	83209	89414
ASH-1205	83209	89414
ASH1206	83122	89406
ASH-1206	83122	89406
ASH1228	83209	89414
ASH-1228	83209	89414
ASH1229	83209	89414
ASH-1229	83209	89414
ASH1230	83122	89406
ASH-1230	83122	89406
ASH137	83122	89406
ASH-137	83122	89406

COMPETITIVE & O.E.M. INTERCHANGE LIST

Lista de Intercambios contra Competidores y Equipo Original.

Liste d'interchange de produits compétitifs & d'équipement original (OEM)

ASH25822	83209	89414
ASH-25822	83209	89414
ASH25823	83209	89414
ASH-25823	83209	89414
ASH25824	83122	89406
ASH-25824	83122	89406
ASH294	83209	89414
ASH-294	83209	89414
AT163G	G63622	
AT-163G	G63622	
AT620	83209	89414
AT-620	83209	89414
AT621	83122	89406
AT-621	83122	89406
AT766	83209	89414
AT-766	83209	89414
F4BE5C832MO	83124	89407
F4-BE5-C832-MO	83124	89407

COFAP		
O.E.M #	Gabriel	Upgrade
45011	85702	
45054	85301	
45056	85315	
45058	85301	
45117	85918	89449
45139C-Y	85901	
8482	85026	
ATG-084	G63608	
ATG-085	G63607	
L-12039	85065	
L-12687	83030	
L-12703	85071	
L-12713	83136	

COLLINS BUS CORP.		
O.E.M #	Gabriel	Upgrade
ASH1136	G63623	
ASH-1136	G63623	
ASH1154	G63622	
ASH-1154	G63622	

CONDUMEX		
O.E.M #	Gabriel	Upgrade
43066	83309	
43136	83017	
43137	83009	
43138	83004	
43139	83021	
43145	83021	
53010	83136	
53018	83317	
53019	83456	89447
53039	85006	
53040	85006	
53041	85310	89423
53042	83309	
53043	83215	
53059	85051	
53062	83009	
53063	83025	
53065	83136	
53066	83124	89407
53080	83015	
58012	85314	89425
58034	85013	89414
58038	85001	89410
58040	85026	
58041	83456	89447
58048	83137	
58049	85323	89436
58050	85061	89450
58055	85003	89411
58056	83137	
58057	83456	89447
58058	85031	
58059	85005	89430
58061	83122	89406
58061	85916	89430
69500	83122	89406
69515	83124	89407
69669	83123	89405
69670	85051	
69671	85006	
69672	85043	
69673	83209	89414
69685	83136	
69688	85302	89420
69705	83122	89406
69711	83207	89407
69712	85013	89414
69713	85046	89434
69714	83215	
69715	85000	89436
69716	85024	
69717	85310	89423
69720	85736	
69725	85918	89449
69726	85319	89428
69728	85055	89439
69729	85314	89425
69732	85300	89419
69741	85906	89407
69743	85061	89450
69745	85058	89431
69746	83137	
69747	85003	89411
69748	85001	89410
69750	85314	89425
69752	85316	89426
69753	85031	
78001	85314	89425
78002	85702	
78003	85308	89422
78005	85310	89423
78007	85307	
78009	85303	89422
78013	85323	89436
78015	85724	89443
78016	85001	89410
78020	85712	
78023	85705	89447
78025	85009	
78027	85314	89425
78030	85316	89426
78034	85920	89503
78039	85311	89424

CONTINENTAL TRAILWAYS - EAGLE INTL.		
O.E.M #	Gabriel	Upgrade
010100020	85307	
01-0100-020	85307	
010100905	85303	89422
01-0100-905	85303	89422
5394467	85305	
5532026	85304	
6055	85307	
6-05-5	85307	
680091	85303	89422
70039	85303	89422
70041	85305	

COMPETITIVE & O.E.M. INTERCHANGE LIST

Lista de Intercambios contra Competidores y Equipo Original.

Liste d'interchange de produits compétitifs & d'équipement original (OEM)

COUNTRY COACH		
O.E.M #	Gabriel	Upgrade
1013634000	85918	89449
10-13634-000	85918	89449
1013760000	85959	
10-13760-000	85959	
1013809000	85958	
10-13809-000	85958	
1618708000	85724	89443
16-18708-000	85724	89443
471700000449	85918	89449
471700002809	85724	89443
471700002991	85959	
471700003920	85958	
89406	89406	
89414	89414	
8C2418045DA	G63622	
8C24-18045-DA	G63622	
8C2418080DB	G63623	
8C24-18080-DB	G63623	
8C2Z18124D	G63622	
8C2Z-18124-D	G63622	
8C2Z18125D	G63623	
8C2Z-18125-D	G63623	
ASH1136	G63623	
ASH-1136	G63623	
ASH1154	G63622	
ASH-1154	G63622	
AT163G	G63622	
AT-163G	G63622	
AT164G	G63623	
AT-164G	G63623	
SDA471700002991	85959	

CRANE CARRIER		
O.E.M #	Gabriel	Upgrade
1265157B000	85712	
1310002	665937	
227A14	85716	
227A-14	85716	
277A1	85307	
277A-1	85307	
277A12	85304	
277A-12	85304	
277A13	85302	89420
277A-13	85302	89420
277A14	85304	
277A-14	85304	
277A8	85303	89422
277A-8	85303	89422
277A9	85307	
277A-9	85307	
60680004	83143	
60680-004	83143	
60680004L	83143	
60680-004L	83143	
64178001	83143	
64178-001	83143	
680088	85713	
680091	85303	89422

CROWN COACH		
O.E.M #	Gabriel	Upgrade
3188729	85303	89422
5532026	85304	
5532036	85734	

CUNHA PRODUCT OHD.		
O.E.M #	Gabriel	Upgrade
CP5222	85315	
CP-5222	85315	

CUSH CORPORATION		
O.E.M #	Gabriel	Upgrade
C0062D	85000	89436
C0062-D	85000	89436
C0078	85000	89436
C0226	85064	
C0227	85014	
C0228	85005	89430
C04045	85045	

DAMON MOTOR COACH		
O.E.M #	Gabriel	Upgrade
1C3418045AA	83209	89414
1C34-18045-AA	83209	89414
1C3418045JA	83209	89414
1C34-18045-JA	83209	89414
24153249	85125	
24-153249	85125	
24153256	85124	
24-153256	85124	
24186629	85125	
24-186629	85125	
9U9418045AA	83209	89414
9U94-18045-AA	83209	89414
9U9418080AA	83122	89406
9U94-18080-AA	83122	89406
9U9Z18124A	83209	89414
9U9Z-18124-A	83209	89414
9U9Z18125A	83122	89406
9U9Z-18125-A	83122	89406
ASH1022	83209	89414
ASH-1022	83209	89414
ASH1023	83122	89406
ASH-1023	83122	89406
ASH1205	83209	89414
ASH-1205	83209	89414
ASH1206	83122	89406
ASH-1206	83122	89406
ASH1228	83209	89414
ASH-1228	83209	89414
ASH1229	83209	89414
ASH-1229	83209	89414
ASH1230	83122	89406
ASH-1230	83122	89406
ASH137	83122	89406
ASH-137	83122	89406
ASH25822	83209	89414
ASH-25822	83209	89414
ASH25823	83209	89414
ASH-25823	83209	89414
ASH25824	83122	89406
ASH-25824	83122	89406
ASH294	83209	89414
ASH-294	83209	89414
AT620	83209	89414
AT-620	83209	89414
AT621	83122	89406
AT-621	83122	89406
AT766	83209	89414
AT-766	83209	89414
F4BE5A832MO	85125	
F4-BE5-A832-MO	85125	
F4BE5B492HO	85125	
F4-BE5-B492-HO	85125	
F4BE5F324HO	85125	
F4-BE5-F324-HO	85125	

COMPETITIVE & O.E.M. INTERCHANGE LIST
Lista de Intercambios contra Competidores y Equipo Original.
Liste d'interchange de produits compétitifs & d'équipement original (OEM)

F4BE5F325HO	85124	
F4-BE5-F325-HO	85124	
W0005662	85125	
W0005663	85124	
W0006254	85125	

DANA		
O.E.M #	Gabriel	Upgrade
SR1VJ100	85078	

DEXTER AXLE		
O.E.M #	Gabriel	Upgrade
1816501	85006	
18165-01	85006	

DIAMOND COACH		
O.E.M #	Gabriel	Upgrade
8C2418045DA	G63622	
8C24-18045-DA	G63622	
8C2418080DB	G63623	
8C24-18080-DB	G63623	
8C2Z18124D	G63622	
8C2Z-18124-D	G63622	
8C2Z18125D	G63623	
8C2Z-18125-D	G63623	
ASH1136	G63623	
ASH-1136	G63623	
ASH1154	G63622	
ASH-1154	G63622	
AT163G	G63622	
AT-163G	G63622	
AT164G	G63623	
AT-164G	G63623	

DIAMOND T		
O.E.M #	Gabriel	Upgrade
5549925	85304	

DIAMOND - REO		
O.E.M #	Gabriel	Upgrade
220551	83214	
220-55-1	83214	
220552	85304	
220-55-2	85304	
220556	83214	
220-55-6	83214	
220557	85304	
220-55-7	85304	
220S510	85712	
220-S5-10	85712	

DODGE TRUCK		
O.E.M #	Gabriel	Upgrade
2516009	G63183	
2960707	G63183	
2961043	G63183	
3633643	G63183	
3633744	G63183	
3638112	G63183	
3638631	G63605	
4036892	G63605	

DUPLEX TRUCK		
O.E.M #	Gabriel	Upgrade
59024	83204	
76043371	83204	
7604-3371	83204	

DURA SUSPENSION		
O.E.M #	Gabriel	Upgrade
1080099	83203	89436
12866	83207	89407
59024	83204	
59030	83203	89436
665133	83203	89436
665267	85029	
76043371	83204	
7604-3371	83204	
A2212	85029	
A-2212	85029	

DUTCHMEN RV		
O.E.M #	Gabriel	Upgrade
8C2418045DA	G63622	
8C24-18045-DA	G63622	
8C2418080DB	G63623	
8C24-18080-DB	G63623	
8C2Z18124D	G63622	
8C2Z-18124-D	G63622	
8C2Z18125D	G63623	
8C2Z-18125-D	G63623	
ASH1136	G63623	
ASH-1136	G63623	
ASH1154	G63622	
ASH-1154	G63622	
AT163G	G63622	
AT-163G	G63622	
AT164G	G63623	
AT-164G	G63623	

DYNAMAX CORP.		
O.E.M #	Gabriel	Upgrade
1013634000	85918	89449
10-13634-000	85918	89449
1013760000	85959	
10-13760-000	85959	
1013809000	85958	
10-13809-000	85958	
1618708000	85724	89443
16-18708-000	85724	89443
471700000449	85918	89449
471700002809	85724	89443
471700002991	85959	
471700003920	85958	
8C2418045DA	G63622	
8C24-18045-DA	G63622	
8C2418080DB	G63623	
8C24-18080-DB	G63623	
8C2Z18124D	G63622	
8C2Z-18124-D	G63622	
8C2Z18125D	G63623	
8C2Z-18125-D	G63623	
ASH1136	G63623	
ASH-1136	G63623	
ASH1154	G63622	
ASH-1154	G63622	
AT163G	G63622	
AT-163G	G63622	

COMPETITIVE & O.E.M. INTERCHANGE LIST

Lista de Intercambios contra Competidores y Equipo Original.

Liste d'interchange de produits compétitifs & d'équipement original (OEM)

AT164G	G63623	
AT-164G	G63623	
SDA471700002991	85959	

EAGLE MOTOR COACH		
O.E.M #	Gabriel	Upgrade
010100020	85307	
01-0100-020	85307	
010100905	85303	89422
01-0100-905	85303	89422
0140100905	85308	89422
0140100-905	85308	89422
014-0100-905	85308	89422
101364	85305	
12J510	85733	
12J-5-10	85733	
1540100514	85314	89425
154-0100-514	85314	89425
5394467	85305	
5532026	85304	
6055	85307	
6-05-5	85307	
680091	85303	89422
690060	85713	
70039	85303	89422
70041	85305	

EAST MANUFACTURING CORP.		
O.E.M #	Gabriel	Upgrade
5170500118	87015	
517-05001-18	87015	
5170500123	85005	89430
517-05001-23	85005	89430
5170500620	85030	89440
517-05006-20	85030	89440
5170500914	83125	
517-05009-14	83125	
5170501007	83214	
517-05010-07	83214	
5170511020	85000	89436
517-05110-20	85000	89436
5170551114	83128	89436
517-05511-14	83128	89436
5170580520	85000	89436
517-05805-20	85000	89436
5170580620	85029	
517-05806-20	85029	
5170580820	85738	
517-05808-20	85738	
5170580920	89437	
517-05809-20	89437	
5170591614	83124	89407
517-05916-14	83124	89407
A20002	85000	89436
A-20002	85000	89436
A20126	85323	89436
A-20126	85323	89436

ELDORADO NATIONAL		
O.E.M #	Gabriel	Upgrade
8C2418045DA	G63622	
8C24-18045-DA	G63622	
8C2418080DB	G63623	
8C24-18080-DB	G63623	
8C2Z18124D	G63622	
8C2Z-18124-D	G63622	
8C2Z18125D	G63623	
8C2Z-18125-D	G63623	
ASH1136	G63623	
ASH-1136	G63623	
ASH1154	G63622	
ASH-1154	G63622	
AT163G	G63622	
AT-163G	G63622	
AT164G	G63623	
AT-164G	G63623	

ENTEGRA COACH		
O.E.M #	Gabriel	Upgrade
8C2418045DA	G63622	
8C24-18045-DA	G63622	
8C2418080DB	G63623	
8C24-18080-DB	G63623	
8C2Z18124D	G63622	
8C2Z-18124-D	G63622	
8C2Z18125D	G63623	
8C2Z-18125-D	G63623	
9U9418080AA	83122	89406
9U94-18080-AA	83122	89406
9U9Z18125A	83122	89406
9U9Z-18125-A	83122	89406
ASH1023	83122	89406
ASH-1023	83122	89406
ASH1136	G63623	
ASH-1136	G63623	
ASH1154	G63622	
ASH-1154	G63622	
ASH1206	83122	89406
ASH-1206	83122	89406
ASH1229	83209	89414
ASH-1229	83209	89414
ASH1230	83122	89406
ASH-1230	83122	89406
ASH137	83122	89406
ASH-137	83122	89406
ASH25822	83209	89414
ASH-25822	83209	89414
ASH25823	83209	89414
ASH-25823	83209	89414
ASH25824	83122	89406
ASH-25824	83122	89406
AT163G	G63622	
AT-163G	G63622	
AT164G	G63623	
AT-164G	G63623	
AT621	83122	89406
AT-621	83122	89406

E-ONE		
O.E.M #	Gabriel	Upgrade
90-2572	85329	

EUCLID		
O.E.M #	Gabriel	Upgrade
E14009	85933	89454
E14021	85955	
E14022	85955	
E14037	85967	
E14042	85965	
E14045	83143	
E14046	83142	
E83203	83203	89436
E83204	83204	
E83205	83209	89414
E83207	83207	89407
E83209	83209	89414
E83214	83214	
E83215	83215	

COMPETITIVE & O.E.M. INTERCHANGE LIST

Lista de Intercambios contra Competidores y Equipo Original.

Liste d'interchange de produits compétitifs & d'équipement original (OEM)

E83216	83216	
E83218	83122	89406
E83219	83219	
E83221	83221	
E83225	83225	
E83242	83242	
E83301	83301	
E83303	83303	
E83308	83308	
E83309	83309	
E83310	83221	
E83312	83312	89409
E83314	83314	
E83318	83318	
E83353	85740	
E83400	83400	
E83401	83401	
E85000	85000	89436
E85001	85001	89410
E85003	85003	89411
E85005	85005	89430
E85006	85006	
E85007	85007	
E85010	85010	
E85012	85012	89413
E85013	85013	89414
E85014	85014	
E85024	85024	
E85026	85026	
E85029	85029	
E85030	85030	89440
E85300	85300	89419
E85302	85302	89420
E85303	85303	89422
E85304	85304	
E85305	85305	
E85307	85307	
E85308	85308	89422
E85310	85310	89423
E85311	85311	89424
E85312	85733	
E85314	85314	89425
E85318	85318	
E85700	85700	
E85702	85702	
E85704	85704	
E85705	85705	89447
E85709	85709	
E85711	85711	
E85712	85712	
E85713	85713	
E87000	85711	
E87001	85734	
E87003	85700	
E87006	85736	
E87012	85705	89447

FCS		
O.E.M #	Gabriel	Upgrade
F343368	85069	89455
F343371	85708	
F343372	83136	
F343373	83456	89447
F343374	85722	
F343375	85310	89423
F343376	85900	
F343378	85902	
F343379	85728	
F343380	85727	
F343381	83400	
F343382	83613	
F344342	85936	89456
F344343	85937	
F344344	83027	
F344345	83112	
F344347	83062	
F344348	83041	
F344349	83045	
F344350	83050	
F344351	83019	
F344352	85729	
F344353	83142	
F344354	83111	
F344355	83143	
F344356	83154	
F344357	83110	
F344358	85026	
F344360	83109	
F346598	85033	89427
F346599	85311	89424
F346601	85319	89428
F346603	85316	89426
F346632	83317	
F346633	85988	
F346634	83515	
F346635	83518	
F346636	83395	
F346637	85649	
F347193	85030	89440
F347194	83203	89436
F347195	85053	89442
F347196	85052	
F347197	85088	
F347198	85058	89431
F347199	85738	
F347200	85072	
F347201	85064	
F347202	85045	
F347203	83127	
F347204	83008	
F347205	85061	89450
F347206	85029	
F347207	85098	89502
F347208	85938	
F347209	83124	89407
F347210	83207	89407
F347211	85066	89448
F347212	83125	
F347213	85931	89458
F347214	83048	
F347215	85067	89451
F347216	83389	89436
F347216	85000	89436
F347217	83128	89436
F347218	83147	
F347219	85006	
F347220	85954	
F347221	85924	89457
F347222	83021	
F347223	85934	
F347224	85919	
F347225	85958	
F347226	85012	89413

COMPETITIVE & O.E.M. INTERCHANGE LIST

Lista de Intercambios contra Competidores y Equipo Original.

Liste d'interchange de produits compétitifs & d'équipement original (OEM)

F347227	85062	89408
F347231	83001	
F347232	85959	
F347233	85070	89459
F347234	85933	89454
F347235	85978	
F347236	83137	
F347238	85331	
F347239	85976	
F347241	85928	
F347242	85957	
F347243	83209	89414
F347244	85043	
F347245	83029	
F347246	83130	
F347247	83135	
F347248	83123	89405
F347249	85084	89460
F347250	85300	89419
F347251	85023	89415
F347252	83002	
F347253	83025	
F347254	83051	
F347255	83035	
F347256	83028	
F347257	83031	
F347260	85724	89443
F347261	85918	89449
F347262	83038	
F347263	85001	89410
F347264	85323	89436
F347265	85320	89429
F347266	85003	89411
F347267	83009	
F347268	85920	89503
F347269	85013	89414
F347270	85005	89430
F347271	85901	
F347272	85932	89453
F347273	85047	89435
F347274	85956	
F347275	83042	
F347276	85923	89458
F347277	83148	
F347278	83017	
F347279	85014	
F347280	85010	
F347291	83047	
F347292	83049	
F347293	83024	
F347294	83026	
F347295	83011	
F347296	83006	
F347297	83053	
F347298	83044	
F347299	83081	
F347300	85989	
F347302	85926	
F347303	85060	
F347304	83163	
F347305	85939	
F347306	85909	
F347307	85036	89405
F347308	85051	
F347309	83122	89406
F347310	85031	
F347311	85343	
F347312	85712	
F347313	83140	
F347314	85301	
F347314	85302	89420
F347315	83126	89430
F347316	85303	89422
F347317	83166	
F347318	85305	
F347318	85307	
F347319	83221	
F347319	85071	
F347320	87015	
F347321	85007	
F347322	85334	
F347323	83101	
F347324	85338	
F347325	83312	89409
F347326	85046	89434
F347327	83150	
F347328	83204	
F347329	85906	89407
F347330	85337	
F347331	85916	89430
F347332	85911	
F347333	83215	
F347334	85055	89439
F347335	85304	
F347335	85734	
F347336	85321	
F347337	83309	
F347339	85967	
F347340	85308	89422
F347341	85024	
F347342	83169	
F347343	83905	
F347344	83906	
F347345	85637	
F347346	85642	
F347347	83519	
F347348	83391	
F347349	83363	
F347350	85639	
F347351	83901	
F347352	83389	89436
F347353	83364	
F347354	85638	
F347355	85648	
F347356	85650	
F442755	646155	
F442790	646177	
F442791	665937	

FEDERAL COACH		
O.E.M #	Gabriel	Upgrade
1012388000	85920	89503
10-12388-000	85920	89503
1012390000	85920	89503
10-12390-000	85920	89503
1013760000	85959	
10-13760-000	85959	
1618708000	85724	89443
16-18708-000	85724	89443
471700002809	85724	89443
471700002991	85959	
ASH1136	G63623	

COMPETITIVE & O.E.M. INTERCHANGE LIST
Lista de Intercambios contra Competidores y Equipo Original.
Liste d'interchange de produits compétitifs & d'équipement original (OEM)

ASH-1136	G63623	
ASH1154	G63622	
ASH-1154	G63622	
SDA471700002991	85959	

FLEETRITE		
O.E.M #	Gabriel	Upgrade
AMS600101	85003	89411
AMS600102	85005	89430
AMS600103	85014	
AMS600104	85000	89436
AMS600106	83312	89409
AMS600107	83309	
AMS600108	83209	89414
AMS600110	83303	
AMS600111	83301	
AMS600112	83456	89447
AMS600113	83215	
AMS600114	83125	
AMS600116	83216	
AMS600117	83308	
AMS600118	83219	
AMS600119	83314	
AMS600120	G63605	
AMS600123	G63183	
AMS600125	83123	89405
AMS600126	83400	
AMS600128	83401	
AMS600129	83317	
AMS600130	83204	
AMS600131	83318	
AMS600132	83215	
AMS600134	83221	
AMS600136	85740	
AMS600139	85740	
AMS600142	83209	89414
AMS600145	85040	
AMS600146	83105	
AMS600147	83216	
AMS600148	85026	
AMS600150	85009	
AMS600151	85024	
AMS600152	83242	
AMS600153	85003	89411
AMS600155	83103	
AMS600156	83103	
AMS600157	83221	
AMS600162	83103	
AMS600163	83101	
AMS600164	83613	
AMS600166	85052	
AMS600167	83128	89436
AMS600168	83635	
AMS600169	85051	
AMS600172	85005	89430
AMS600173	85043	
AMS600174	83125	
AMS600175	83120	
AMS600202	83009	
AMS650101	85062	89408
AMS650102	85001	89410
AMS650103	85320	89429
AMS650105	85026	
AMS650107	85316	89426
AMS650108	85030	89440
AMS650109	85058	89431
AMS650110	85005	89430
AMS650111	85006	
AMS650112	89402	
AMS650113	85012	89413
AMS650114	85006	
AMS650115	85027	
AMS650116	85303	89422
AMS650118	83215	
AMS650119	85029	
AMS650120	85010	
AMS650121	89432	
AMS650122	85063	
AMS650123	85054	
AMS650124	85053	89442
AMS650128	85031	
AMS650130	85061	89450
AMS650139	85918	89449
AMS650400	85033	89427
AMS650401	85013	89414
AMS650402	85311	89424
AMS650404	85310	89423
AMS650405	85023	89415
AMS650406	85024	
AMS650407	85736	
AMS650408	85319	89428
AMS650409	85003	89411
AMS650410	85300	89419
AMS650411	85036	89405
AMS650412	83122	89406
AMS650415	85046	89434
AMS650416	85323	89436
AMS650417	85322	
AMS650418	85906	89407
AMS650419	85000	89436
AMS650420	85013	89414
AMS650421	85916	89430
AMS650426	85054	
AMS650428	85321	
AMS650429	85030	89440
AMS650430	85712	
AMS650431	85909	
AMS650432	85910	
AMS650433	85910	
AMS650434	85012	89413
AMS650435	85901	
AMS650436	85900	
AMS650439	85732	
AMS650440	85711	
AMS650441	85704	
AMS650442	85700	
AMS650444	85311	89424
AMS650448	85700	
AMS650449	85702	
AMS650451	85029	
AMS650452	85733	
AMS650453	85043	
AMS650454	85713	
AMS650455	85716	
AMS650456	85376	
AMS650458	85908	
AMS650459	85043	
AMS650463	85040	
AMS650464	85716	
AMS650466	85047	89435
AMS650468	85069	89455
AMS650471	85302	89420
AMS650473	85329	
AMS650474	85712	

COMPETITIVE & O.E.M. INTERCHANGE LIST

Lista de Intercambios contra Competidores y Equipo Original.

Liste d'interchange de produits compétitifs & d'équipement original (OEM)

AMS650475	85065	
AMS650478	85030	89440
AMS650479	83122	89406
AMS650480	83109	
AMS650480	83111	
AMS650481	83123	89405
AMS650482	85006	
AMS650486	85066	89448
AMS65107	85316	89426
AMS65109	85058	89431
AMS65144	85957	
AMS65146	85925	
AMS65158	85954	
AMS660102	85005	89430
AMS660103	85014	
AMS660104	85000	89436
AMS660106	83312	89409
AMS660107	83309	
AMS660108	83209	89414
AMS660110	83303	
AMS660111	83301	
AMS660112	83456	89447
AMS660113	83215	
AMS660114	85006	
AMS660116	83216	
AMS660117	83308	
AMS660118	85012	89413
AMS660119	83314	
AMS660120	G63605	
AMS660123	G63183	
AMS660125	83123	89405
AMS660126	83400	
AMS660128	83401	
AMS660129	83317	
AMS660130	83204	
AMS660131	83318	
AMS660132	83215	
AMS660134	83221	
AMS660136	85740	
AMS660142	83209	89414
AMS660145	85040	
AMS660146	83105	
AMS660147	83216	
AMS660148	85026	
AMS660149	85042	
AMS660153	85003	89411
AMS660155	83103	
AMS660157	85030	89440
AMS660160	83114	
AMS660161	G63610	
AMS660162	83103	
AMS660164	83613	
AMS660166	85052	
AMS660167	83128	89436
AMS660168	83635	
AMS660169	85051	
AMS660170	83016	
AMS660171	83017	
AMS660172	83126	89430
AMS660173	85043	
AMS660174	83125	
AMS660175	83120	
AMS660176	83018	
AMS660177	83019	
AMS660179	83162	
AMS660182	83004	
AMS660183	85012	89413
AMS660187	85071	
AMS660188	85045	
AMS660189	83136	
AMS660190	83107	
AMS660191	83216	
AMS660192	85001	89410
AMS660193	83001	
AMS660194	83207	89407
AMS660195	83130	
AMS660196	G63610	
AMS660197	G63866	
AMS660198	83007	
AMS660200	83008	
AMS660201	83308	
AMS660202	83009	
AMS660203	83112	
AMS660204	83010	
AMS660205	83003	
AMS660211	83110	
AMS660212	83015	
AMS660213	85009	
AMS660214	83002	
AMS660215	85059	
AMS660216	83123	89405
AMS660218	83137	
AMS660219	83215	
AMS660220	83109	
AMS660223	85055	89439
AMS660224	83111	
AMS660232	83114	
AMS660233	83023	
AMS660234	83013	
AMS660236	83025	
AMS660237	83005	
AMS660238	83101	
AMS660244	83125	
AMS660247	83118	
AMS660502	646155	
AMS660504	632147	
AMS700101	85308	89422
AMS700102	85303	89422
AMS700103	85302	89420
AMS700104	85304	
AMS700105	85314	89425
AMS700106	85301	
AMS700107	85307	
AMS700108	85315	
AMS700111	85320	89429
AMS700112	85722	
AMS700113	85736	
AMS700115	85712	
AMS700116	83136	
AMS700120	85332	
AMS700121	83136	
AMS700401	85700	
AMS700402	85310	89423
AMS700403	85702	
AMS700404	85311	89424
AMS700405	85300	89419
AMS700406	85711	
AMS700407	85712	
AMS700408	85704	

COMPETITIVE & O.E.M. INTERCHANGE LIST
Lista de Intercambios contra Competidores y Equipo Original.
Liste d'interchange de produits compétitifs & d'équipement original (OEM)

AMS700410	85314	89425
AMS700413	85705	89447
AMS700414	85723	
AMS700415	85318	
AMS700416	85709	
AMS700418	85003	89411
AMS700419	85708	
AMS700420	85733	
AMS700421	85712	
AMS700422	85308	89422
AMS700423	85724	89443
AMS700424	85333	
AMS74421	85708	
AMS85722	83400	
AMS85768	83209	89414
AMS85802	83216	
AMS85803	G63306	
AMS85821	G63406	
AMS85853	G63183	
AMS85895	83207	89407
AMS85900	G63386	
AMS85901	G63387	
AMS85904	G63299	
AMS85905	G63405	
AMS85960	G63366	

FLEETWOOD		
O.E.M #	Gabriel	Upgrade
141700131809	85029	
141700131810	83160	
1616736000	85029	
16-16736-000	85029	
1616737000	83160	
16-16737-000	83160	
1616873000	85029	
16-16873-000	85029	
1616874000	83160	
16-16874-000	83160	
1618103000	85900	
16-18103-000	85900	
1C3418045AA	83209	89414
1C34-18045-AA	83209	89414
1C3418045JA	83209	89414
1C34-18045-JA	83209	89414

24153256	85124	
24-153256	85124	
481700000493	85900	
8C2418045DA	G63622	
8C24-18045-DA	G63622	
8C2418080DB	G63623	
8C24-18080-DB	G63623	
8C2Z18124D	G63622	
8C2Z-18124-D	G63622	
8C2Z18125D	G63623	
8C2Z-18125-D	G63623	
9U9418045AA	83209	89414
9U94-18045-AA	83209	89414
9U9418080AA	83122	89406
9U94-18080-AA	83122	89406
9U9Z18124A	83209	89414
9U9Z-18124-A	83209	89414
9U9Z18125A	83122	89406
9U9Z-18125-A	83122	89406
ASH1022	83209	89414
ASH-1022	83209	89414
ASH1023	83122	89406
ASH-1023	83122	89406
ASH1136	G63623	
ASH-1136	G63623	
ASH1154	G63622	
ASH-1154	G63622	
ASH1205	83209	89414
ASH-1205	83209	89414
ASH1206	83122	89406
ASH-1206	83122	89406
ASH1228	83209	89414
ASH-1228	83209	89414
ASH1229	83209	89414
ASH-1229	83209	89414
ASH1230	83122	89406
ASH-1230	83122	89406
ASH137	83122	89406
ASH-137	83122	89406
ASH25822	83209	89414
ASH-25822	83209	89414
ASH25823	83209	89414
ASH-25823	83209	89414
ASH25824	83122	89406
ASH-25824	83122	89406
ASH294	83209	89414
ASH-294	83209	89414
AT163G	G63622	
AT-163G	G63622	

AT164G	G63623	
AT-164G	G63623	
AT620	83209	89414
AT-620	83209	89414
AT621	83122	89406
AT-621	83122	89406
AT766	83209	89414
AT-766	83209	89414
F4BE5F325HO	85124	
F4-BE5-F325-HO	85124	
W0005663	85124	

FLUIDRIVE		
O.E.M #	Gabriel	Upgrade
2697	85712	

FLXIBLE BUS		
O.E.M #	Gabriel	Upgrade
015813	85708	
06036700151	85700	
06-0367-00151	85700	
06036700156	85702	
06-0367-00156	85702	
22012067	85700	
22012114	85700	
22024061	85704	
22025067	85704	
22025305	85704	
3166657	85700	
3192333	85700	
481239	85736	
48-1-239	85736	
481241	85712	
48-1-241	85712	
4975518	85704	
6051	85736	
6-05-1	85736	
60510	85734	
6-05-10	85734	
60513	85304	
6-05-13	85304	
6052	85736	
6-05-2	85736	

COMPETITIVE & O.E.M. INTERCHANGE LIST

Lista de Intercambios contra Competidores y Equipo Original.

Liste d'interchange de produits compétitifs & d'équipement original (OEM)

6053	85736	
6-05-3	85736	
6054	85736	
6-05-4	85736	
6055	85307	
6-05-5	85307	
6056	85736	
6-05-6	85736	
6057	85736	
6-05-7	85736	
6058	85736	
6-05-8	85736	
6059	85304	
6-05-9	85304	
63671	85711	
6-367-1	85711	
636711	85711	
6-367-11	85711	
636712	85700	
6-367-12	85700	
636714	85700	
6-367-14	85700	
636716	85700	
6-367-16	85700	
636717	85700	
6-367-17	85700	
63672	85736	
6-367-2	85736	
63673	85304	
6-367-3	85304	
63676	85711	
6-367-6	85711	
63677	85305	
6-367-7	85305	
63678	85700	
6-367-8	85700	
63679	85711	
6-367-9	85711	
680029	85301	
680155	85712	

695125	85704	
74412	85704	
87252000001	85704	
87-2520-00001	85704	
87252000003	85704	
87-2520-00003	85704	
97220100151	85700	
97-2201-00151	85700	
97221000001	85704	
97-2210-00001	85704	
97221000002	85704	
97-2210-00002	85704	
97221000003	85704	
97-2210-00003	85704	
97221000004	85704	
97-2210-00004	85704	
97221000005	85704	
97-2210-00005	85704	
97221000006	85704	
97-2210-00006	85704	
97221000009	85704	
97-2210-00009	85704	
97221000011	85704	
97-2210-00011	85704	
97221000156	85702	
97-2210-00156	85702	
97221000157	85708	
97-2210-00157	85708	
97221000160	85705	89447
97-2210-00160	85705	89447
97221000164	85708	
97-2210-00164	85708	
97221000170	85733	
97-2210-00170	85733	
97999900807	85307	
97-9999-00807	85307	
97999902514	85700	
97-9999-02514	85700	
97999902515	85702	
97-9999-02515	85702	
97999902632	85711	

97-9999-02632	85711	
97999902633	85311	89424
97-9999-02633	85311	89424
97999902634	85733	
97-9999-02634	85733	
97999902635	85732	
97-9999-02635	85732	
97999902636	85716	
97-9999-02636	85716	

FLYER INDUSTRIES		
O.E.M #	Gabriel	Upgrade
009863	85722	
015915	85711	
15813	85708	
22012067	85700	
22012114	85700	
3166657	85700	
3192333	85700	
4975501	85700	
4975552	85711	
5926568	85700	
592-6568	85700	
5979574	85700	

FORD		
O.E.M #	Gabriel	Upgrade
12010012	83023	
1201-0012	83023	
12011043	83025	
1201-1043	83025	
12011044	83025	
1201-1044	83025	
12020012	83023	
1202-0012	83023	
12020032	83016	
1202-0032	83016	
12020042	83025	
1202-0042	83025	
12021043	83025	
1202-1043	83025	
12021044	83025	

COMPETITIVE & O.E.M. INTERCHANGE LIST
Lista de Intercambios contra Competidores y Equipo Original.
Liste d'interchange de produits compétitifs & d'équipement original (OEM)

1202-1044	83025	
1C3418045AA	83209	89414
1C34-18045-AA	83209	89414
1C3418045JA	83209	89414
1C34-18045-JA	83209	89414
1C4418080AA	83123	89405
1C44-18080-AA	83123	89405
2C4418045BA	83175	
2C44-18045-BA	83175	
2C4Z18124BA	83175	
2C4Z-18124-BA	83175	
2C7Z18125AA	G63837	
2C7Z-18125-AA	G63837	
2C7Z18125CA	G63607	
2C7Z-18125-CA	G63607	
3199942	89402	
3553628C1	85927	
3553628C2	85927	
3578858C1	85926	
3578858C2	85926	
3584116C1	83175	
3584116C2	83175	
3584117C2	83135	
3584118C2	85928	
3919942	89402	
3U2Z18124BAA	G63809	
3U2Z-18124-BAA	G63809	
3U2Z18124BV	G63614	
3U2Z-18124-BV	G63614	
3U2Z18124BW	G63614	
3U2Z-18124-BW	G63614	
3U2Z18124EA	G63772	
3U2Z-18124-EA	G63772	
3U2Z18124FA	G63608	
3U2Z-18124-FA	G63608	
3U2Z18124FAA	G63809	
3U2Z-18124-FAA	G63809	
3U2Z18124JAA	G63614	
3U2Z-18124-JAA	G63614	
3U2Z18124MAA	83131	
3U2Z-18124-MAA	83131	
3U2Z18124YAA	G63809	

3U2Z-18124-YAA	G63809	
3U2Z18125AD	69575	
3U2Z-18125-AD	69575	
3U2Z18125CA	G63607	
3U2Z-18125-CA	G63607	
3U2Z18125DA	G63525	
3U2Z-18125-DA	G63525	
3U2Z18125EA	G63524	
3U2Z-18125-EA	G63524	
3U2Z18125RA	G63623	
3U2Z-18125-RA	G63623	
47 1700 007 203	85013	89414
471700007117	85010	
471700009775	85010	
471700011530	85181	
471700011531	85180	
4790213	83122	89406
47902-13	83122	89406
4790228	85013	89414
47902-28	85013	89414
479028	83122	89406
47902-8	83122	89406
4C4O18045AA	83163	
4C4O-18045-AA	83163	
4C4O18045BB	83135	
4C4O-18045-BB	83135	
4C4O18045CA	85957	
4C4O-18045-CA	85957	
4C4O18045DB	85927	
4C4O-18045-DB	85927	
4C4O18045EA	85926	
4C4O-18045-EA	85926	
4C4O18045GA	83175	
4C4O-18045-GA	83175	
4C4O18045HA	83135	
4C4O-18045-HA	83135	
4C4O18045JA	85928	
4C4O-18045-JA	85928	
4C4O18045KA	85976	
4C4O-18045-KA	85976	
4C4O18045LA	85976	
4C4O-18045-LA	85976	

4C4O18045MA	85926	
4C4O-18045-MA	85926	
4C4O18080AA	83101	
4C4O-18080-AA	83101	
4C4O18080BA	83317	
4C4O-18080-BA	83317	
4C4Z18124AB	83163	
4C4Z-18124-AB	83163	
4C4Z18124BB	83135	
4C4Z-18124-BB	83135	
4C4Z18124CB	85957	
4C4Z-18124-CB	85957	
4C4Z18124DC	85927	
4C4Z-18124-DC	85927	
4C4Z18124EA	85926	
4C4Z-18124-EA	85926	
4C4Z18124GB	83175	
4C4Z-18124-GB	83175	
4C4Z18124HB	83135	
4C4Z-18124-HB	83135	
4C4Z18124JB	85928	
4C4Z-18124-JB	85928	
4C4Z18124KA	85976	
4C4Z-18124-KA	85976	
4C4Z18124LA	85976	
4C4Z-18124-LA	85976	
4C4Z18124M	85926	
4C4Z-18124-M	85926	
4C4Z18124P	83135	
4C4Z-18124-P	83135	
4C4Z18124QA	83175	
4C4Z-18124-QA	83175	
4C4Z18124RA	85928	
4C4Z-18124-RA	85928	
4C4Z18125AB	83101	
4C4Z-18125-AB	83101	
4C4Z18125B	83317	
4C4Z-18125-B	83317	
4C4Z18125CA	85976	
4C4Z-18125-CA	85976	

COMPETITIVE & O.E.M. INTERCHANGE LIST

Lista de Intercambios contra Competidores y Equipo Original.

Liste d'interchange de produits compétitifs & d'équipement original (OEM)

4C4Z18125DA	85926	
4C4Z-18125-DA	85926	
4U2Z18V124AA	G63678	
4U2Z-18V124-AA	G63678	
501906C91	83317	
501906C92	83317	
572412	83109	
57241-2	83109	
57365111	85006	
57365-111	85006	
5C3Z18124JA	G63969	
5C3Z-18124-JA	G63969	
5C3Z18125CF	77969	
5C3Z-18125-CF	77969	
5C3Z18125DA	77968	
5C3Z-18125-DA	77968	
5U2Z18V124AA	G63714	
5U2Z-18V124-AA	G63714	
5U2Z18V124AHA	G63622	
5U2Z-18V124-AHA	G63622	
5U2Z18V124AU	G63772	
5U2Z-18V124-AU	G63772	
5U2Z18V124BA	G63716	
5U2Z-18V124-BA	G63716	
5U2Z18V124CAA	G63809	
5U2Z-18V124-CAA	G63809	
5U2Z18V124DB	G63455	
5U2Z-18V124-DB	G63455	
5U2Z18V124GA	G63809	
5U2Z-18V124-GA	G63809	
5U2Z18V124LA	G63929	
5U2Z-18V124-LA	G63929	
5U2Z18V125AE	G63808	
5U2Z-18V125-AE	G63808	
5U2Z18V125AF	G63810	
5U2Z-18V125-AF	G63810	
5U2Z18V125BDA	G63623	
5U2Z-18V125-BDA	G63623	
5U2Z18V125BGA	G63778	
5U2Z-18V125-BGA	G63778	
5U2Z18V125BS	G63607	
5U2Z-18V125-BS	G63607	
5U2Z18V125BT	G63525	
5U2Z-18V125-BT	G63525	
5U2Z18V125BU	G63524	
5U2Z-18V125-BU	G63524	
5U2Z18V125F	G63676	
5U2Z-18V125-F	G63676	
5U2Z18V125G	G63837	
5U2Z-18V125-G	G63837	
5U2Z18V125H	G63406	
5U2Z-18V125-H	G63406	
60670008	83123	89405
60670-008	83123	89405
60670008L	83123	89405
60670-008L	83123	89405
60670011	83148	
60670-011	83148	
60670012	83168	
60670-012	83168	
60675003	85976	
60675-003	85976	
60675003L	85976	
60675-003L	85976	
60675014	85978	
60675-014	85978	
680029	85301	
6C2Z18124B	G63929	
6C2Z-18124-B	G63929	
6E7O18B038AA	83364	
6E7O-18B038-AA	83364	
6E7Z18124AB	83364	
6E7Z-18124-AB	83364	
6ETZ18125A	83364	
6ETZ-18125-A	83364	
6U2Z18V125A	G63837	
6U2Z18V125B	G63607	
6U2Z-18V125-B	G63607	
70127	85006	
70128	85006	
7C3418045HB	G63969	
7C34-18045-HB	G63969	
7C3418080DCB	77968	
7C34-18080-DCB	77968	
7W7Z18125B	69574	
7W7Z-18125-B	69574	
87HU18045AA	85301	
87HU-18045-AA	85301	
8C2418045DA	G63622	
8C2418045DA	G63625	
8C24-18045-DA	G63622	
8C2418080DB	G63623	
8C24-18080-DB	G63623	
8C2Z18124D	G63622	
8C2Z18124D	G63624	
8C2Z-18124-D	G63622	
8C2Z18125A	G63623	
8C2Z-18125-A	G63623	
8C2Z18125B	G63623	
8C2Z-18125-B	G63623	
8C2Z18125C	G63623	
8C2Z-18125-C	G63623	
8C2Z18125D	G63623	
8C2Z-18125-D	G63623	
90044769	83207	89407
90044770	83207	89407
90045099	85906	89407
90045132	85906	89407
90045132	85909	
9U9418045AA	83209	89414
9U94-18045-AA	83209	89414
9U9418080AA	83122	89406
9U94-18080-AA	83122	89406
9U9Z18124A	83209	89414
9U9Z-18124-A	83209	89414
9U9Z18124B	83209	89414
9U9Z18125A	83122	89406
9U9Z-18125-A	83122	89406
9U9Z18125B	83122	89406
9U9Z-18125-B	83122	89406
AA494	83131	
AA-494	83131	
AA615	83135	
AA-615	83135	
AA616	83175	

COMPETITIVE & O.E.M. INTERCHANGE LIST
Lista de Intercambios contra Competidores y Equipo Original.
Liste d'interchange de produits compétitifs & d'équipement original (OEM)

AA-616	83175	
AA617	85928	
AA-617	85928	
AA619	85927	
AA-619	85927	
AA620	83101	
AA-620	83101	
ASH1022	83209	89414
ASH-1022	83209	89414
ASH1023	83122	89406
ASH-1023	83122	89406
ASH1105	85976	
ASH-1105	85976	
ASH1136	G63623	
ASH-1136	G63623	
ASH1154	G63622	
ASH-1154	G63622	
ASH1205	83209	89414
ASH-1205	83209	89414
ASH1206	83122	89406
ASH-1206	83122	89406
ASH12251	85013	89414
ASH-12251	85013	89414
ASH12261	85010	
ASH-12261	85010	
ASH1228	83209	89414
ASH-1228	83209	89414
ASH1229	83209	89414
ASH-1229	83209	89414
ASH1230	83122	89406
ASH-1230	83122	89406
ASH137	83122	89406
ASH-137	83122	89406
ASH23486	G63461	
ASH-23486	G63461	
ASH23488	G63461	
ASH-23488	G63461	
ASH24446	83215	
ASH-24446	83215	
ASH2447	83140	
ASH-2447	83140	
ASH24473	85013	89414
ASH-24473	85013	89414
ASH24474	85010	
ASH-24474	85010	
ASH24492	83175	

ASH-24492	83175	
ASH24522	85013	89414
ASH-24522	85013	89414
ASH-24523	85010	
ASH24589	85010	
ASH-24589	85010	
ASH24634	85013	89414
ASH-24634	85013	89414
ASH24634	85013	89414
ASH24658	85181	
ASH-24658	85181	
ASH24659	85181	
ASH-24659	85181	
ASH24660	85180	
ASH-24660	85180	
ASH24661	83317	
ASH-24661	83317	
ASH24662	83168	
ASH-24662	83168	
ASH24663	83148	
ASH-24663	83148	
ASH247	G63461	
ASH-247	G63461	
ASH25822	83209	89414
ASH-25822	83209	89414
ASH25823	83209	89414
ASH-25823	83209	89414
ASH25824	83122	89406
ASH-25824	83122	89406
ASH25825	83122	89406
ASH-25825	83122	89406
ASH25838	85978	
ASH-25838	85978	
ASH294	83209	89414
ASH-294	83209	89414
ASH397	83131	
ASH-397	83131	
ASH722	85976	
ASH-722	85976	
AT163G	G63622	
AT163G	G63623	
AT-163G	G63622	
AT164G	G63623	
AT-164G	G63623	

AT504G	G63679	
AT-504G	G63679	
AT610	G63461	
AT-610	G63461	
AT611	G63461	
AT-611	G63461	
AT620	83209	89414
AT-620	83209	89414
AT621	83122	89406
AT-621	83122	89406
AT696	83140	
AT-696	83140	
AT766	83209	89414
AT-766	83209	89414
AT811	83135	
AT-811	83135	
AT812	85928	
AT-812	85928	
AX267A	83309	
AX-267A	83309	
AX310	83215	
AX-310	83215	
AX85A	83219	
B3Q18124A	83219	
B3Q-18124-A	83219	
B6TZ18124A	83219	
B6TZ-18124-A	83219	
B7T18124C	83225	
B7T-18124-C	83225	
B7TZ18124B	83216	
B7TZ-18124-B	83216	
B7TZ18124C	83216	
B7TZ-18124-C	83216	
B7TZ18124D	83219	
B7TZ-18124-D	83219	
B8Q18125A	85307	
B8Q-18125-A	85307	
B8QZ18124A	83312	89409
B8QZ-18124-A	83312	89409
B8TZ18124A	83219	
B8TZ-18124-A	83219	
B9TT18045C	83219	

COMPETITIVE & O.E.M. INTERCHANGE LIST

Lista de Intercambios contra Competidores y Equipo Original.

Liste d'interchange de produits compétitifs & d'équipement original (OEM)

B9TT-18045-C	83219	
B9TT18045D	83219	
B9TT-18045-D	83219	
BU9Z18124A	85013	89414
BU9Z-18124-A	85013	89414
BU9Z18125A	85010	
BU9Z-18125-A	85010	
C0TT18045A	83219	
C0TT-18045-A	83219	
C0TT18045D	83216	
C0TT-18045-D	83216	
C0TZ18124A	83216	
C0TZ-18124-A	83216	
C1TT18045C	83312	89409
C1TT-18045-C	83312	89409
C1TT18045D	G63406	
C1TT-18045-D	G63406	
C1TT18045E	83314	
C1TT-18045-E	83314	
C1TT18045G	83216	
C1TT-18045-G	83216	
C1TZ18045C	83312	89409
C1TZ-18045-C	83312	89409
C1TZ18124B	83216	
C1TZ-18124-B	83216	
C1TZ18124C	83312	89409
C1TZ-18124-C	83312	89409
C1TZ18124D	83309	
C1TZ-18124-D	83309	
C1TZ18124E	83312	89409
C1TZ-18124-E	83312	89409
C1TZ18124F	83312	89409
C1TZ-18124-F	83312	89409
C1TZ18124N	83314	
C1TZ-18124-N	83314	
C1TZ18124P	83312	89409
C1TZ-18124-P	83312	89409
C2TA18045A	83216	
C2TA-18045-A	83216	
C2TA18045B	83308	
C2TA-18045-B	83308	
C2TZ18124A	83308	
C2TZ-18124-A	83308	
C3TA18045A	83216	
C3TA-18045-A	83216	
C3TZ18124A	83308	
C3TZ-18124-A	83308	
C4HZ18124A	83312	89409
C4HZ-18124-A	83312	89409
C4HZ18124B	83309	
C4HZ-18124-B	83309	
C4HZ18124C	83314	
C4HZ-18124-C	83314	
C4HZ18124D	83312	89409
C4HZ-18124-D	83312	89409
C4HZ18124E	83309	
C4HZ-18124-E	83309	
C4HZ18124F	83308	
C4HZ-18124-F	83308	
C4PF18045H	83216	
C4PF-18045-H	83216	
C4TZ18124AA	83308	
C4TZ-18124-AA	83308	
C4TZ18124AB	83308	
C4TZ-18124-AB	83308	
C4TZ18124B	83308	
C4TZ-18124-B	83308	
C5TZ18124A	83308	
C5TZ-18124-A	83308	
C6PF18077A	G63306	
C6PF-18077-A	G63306	
C6PF18077DD	83216	
C6PF-18077-DD	83216	
C6PF18077DE	83219	
C6PF-18077-DE	83219	
C6PF18077DL	83312	89409
C6PF-18077-DL	83312	89409
C6PF18077DN	83314	
C6PF-18077-DN	83314	
C6PF18077F	83225	
C6PF-18077-F	83225	
C6TA18045U	85301	
C6TA-18045-U	85301	
C6TA18045V	85301	
C6TA-18045-V	85301	
C6TA18045Y	85301	
C6TA-18045-Y	85301	
C6TA18045Z	85301	
C6TA-18045-Z	85301	
C6TZ18124D	85301	
C6TZ-18124-D	85301	
C6TZ18124E	85301	
C6TZ-18124-E	85301	
C6TZ18124H	85301	
C6TZ-18124-H	85301	
C6TZ18124J	85301	
C6TZ-18124-J	85301	
C7HZ18124A	83312	89409
C7HZ-18124-A	83312	89409
C7PF18077A	83225	
C7PF-18077-A	83225	
C7TA18045R	83216	
C7TA-18045-R	83216	
C7TA18045Z	85301	
C7TA-18045-Z	85301	
C8HA18045A	83312	89409
C8HA-18045-A	83312	89409
C8PF18045CM	83216	
C8PF-18045-CM	83216	
C8TA18045AA	G63386	
C8TA-18045-AA	G63386	
CU9Z18124A	85013	89414
CU9Z-18124-A	85013	89414
CU9Z18125A	85010	
CU9Z-18125-A	85010	
D0HA18045D	83309	
D0HA-18045-D	83309	
D0HA18045E	83312	89409
D0HA-18045-E	83312	89409
D0HZ18124A	83309	
D0HZ-18124-A	83309	
D0HZ18124B	83312	89409
D0HZ-18124-B	83312	89409
D0HZ18124C	83314	
D0HZ-18124-C	83314	
D1TF18045LA	83312	89409
D1TF-18045-LA	83312	89409
D1TZ18124D	83308	
D1TZ-18124-D	83308	

COMPETITIVE & O.E.M. INTERCHANGE LIST
Lista de Intercambios contra Competidores y Equipo Original.
Liste d'interchange de produits compétitifs & d'équipement original (OEM)

D1TZ18124E	83216	
D1TZ-18124-E	83216	
D1TZ18124F	83312	89409
D1TZ-18124-F	83312	89409
D2EF18045AA	83312	89409
D2EF-18045-AA	83312	89409
D2EF18124AA	83312	89409
D2EF-18124-AA	83312	89409
D2HA18045E1A	85304	
D2HA-18045-E1A	85304	
D2HA18045E1B	85304	
D2HA-18045-E1B	85304	
D2HA18045E2A	85304	
D2HA-18045-E2A	85304	
D2HA18045E2B	85304	
D2HA-18045-E2B	85304	
D2HA18045EB	85301	
D2HA-18045-EB	85301	
D2HA18045F1A	85301	
D2HA-18045-F1A	85301	
D2HA18045F1B	85301	
D2HA-18045-F1B	85301	
D2HA18045F2A	85301	
D2HA-18045-F2A	85301	
D2HA18045F2B	85301	
D2HA-18045-F2B	85301	
D2HF18045A	83314	
D2HF-18045-A	83314	
D2HF18045AA	83314	
D2HF-18045-AA	83314	
D2HF18045BA	83309	
D2HF-18045-BA	83309	
D2HF18045CA	83308	
D2HF-18045-CA	83308	
D2HF18045DA	83312	89409
D2HF-18045-DA	83312	89409
D2HF18124AA	83314	
D2HF-18124-AA	83314	
D2HT18045CA	83314	
D2HT-18045-CA	83314	
D2HT18045EA	83312	89409
D2HT-18045-EA	83312	89409
D2HT18045GA	83308	

D2HT-18045-GA	83308	
D2HT18080HA	83225	
D2HT-18080-HA	83225	
D2HZ18080A	83209	89414
D2HZ-18080-A	83209	89414
D2HZ18125A	83209	89414
D2HZ-18125-A	83209	89414
D2HZ18125B	83209	89414
D2HZ-18125-B	83209	89414
D2KF18045AA	83312	89409
D2KF-18045-AA	83312	89409
D2KF18124AA	83312	89409
D2KF-18124-AA	83312	89409
D2TA18045AAA	83219	
D2TA-18045-AAA	83219	
D2TA18045ZA	83219	
D2TA-18045-ZA	83219	
D2TF18045AA	83312	89409
D2TF-18045-AA	83312	89409
D2TF18045FA	83312	89409
D2TF-18045-FA	83312	89409
D2TF18045GA	83308	
D2TF-18045-GA	83308	
D2TF18080HA	83225	
D2TF-18080-HA	83225	
D2TF18124F	83309	
D2TF-18124-F	83309	
D2TZ18124A	83308	
D2TZ-18124-A	83308	
D2TZ18124E	83312	89409
D2TZ-18124-E	83312	89409
D2TZ18124F	83309	
D2TZ-18124-F	83309	
D2TZ18124G	83314	
D2TZ-18124-G	83314	
D2TZ18124H	83308	
D2TZ-18124-H	83308	
D2TZ18124J	83312	89409
D2TZ-18124-J	83312	89409
D3TA18045BA	83219	
D3TA-18045-BA	83219	
D3TZ18124B	83219	
D3TZ-18124-B	83219	
D4HA18080A	83209	89414
D4HA-18080-A	83209	89414
D4HA18080AA	83209	89414

D4HA-18080-AA	83209	89414
D4TF18045AA	83312	89409
D4TF-18045-AA	83312	89409
D4TZ18124J	83308	
D4TZ-18124-J	83308	
D5TZ18124B	83308	
D5TZ-18124-B	83308	
D5TZ18124C	83312	89409
D5TZ-18124-C	83312	89409
D7HA18080AA	83123	89405
D7HA-18080-AA	83123	89405
D7HF18045FA	83312	89409
D7HF-18045-FA	83312	89409
D7HF18080AA	83215	
D7HF-18080-AA	83215	
D7HF18125AA	83215	
D7HF-18125-AA	83215	
D7HT18045BA	83312	89409
D7HT-18045-BA	83312	89409
D7HT18045CA	83314	
D7HT-18045-CA	83314	
D7HT18045DA	83309	
D7HT-18045-DA	83309	
D7HT18045EA	83312	89409
D7HT-18045-EA	83312	89409
D7HT18045GA	83308	
D7HT-18045-GA	83308	
D7HT18045JA	83308	
D7HT-18045-JA	83308	
D7HT18045NA	85301	
D7HT-18045-NA	85301	
D7HT18080BA	83225	
D7HT-18080-BA	83225	
D7HT18080DA	83215	
D7HT-18080-DA	83215	
D7HT18124BA	83312	89409
D7HT-18124-BA	83312	89409
D7HT18124CA	83314	
D7HT-18124-CA	83314	
D7HT18124DA	83309	
D7HT-18124-DA	83309	
D7HT18124EA	83312	89409
D7HT-18124-EA	83312	89409
D7HT18124FA	83312	89409
D7HT-18124-FA	83312	89409

COMPETITIVE & O.E.M. INTERCHANGE LIST

Lista de Intercambios contra Competidores y Equipo Original.

Liste d'interchange de produits compétitifs & d'équipement original (OEM)

D7HT18124GA	83308	
D7HT-18124-GA	83308	
D7HT18124HA	83219	
D7HT-18124-HA	83219	
D7HT18124JA	83308	
D7HT-18124-JA	83308	
D7HT18124KA	85301	
D7HT-18124-KA	85301	
D7HT18125DA	83215	
D7HT-18125-DA	83215	
D7HT18125FA	83123	89405
D7HT-18125-FA	83123	89405
D7HZ18125A	83215	
D7HZ-18125-A	83215	
D7KF18045EA	83312	89409
D7KF-18045-EA	83312	89409
D7TA18124GA	83314	
D7TA-18124-GA	83314	
D8HZ18124A	85301	
D8HZ-18124-A	85301	
D8HZ18125A	83209	89414
D8HZ-18125-A	83209	89414
D8HZ18125B	83123	89405
D8HZ-18125-B	83123	89405
DU94-18045-CB	85013	89414
DU9418080CA	85010	
DU94-18080-CA	85010	
DU9418080CB	85010	
DU94-18080-CB	85010	
DU9Z18124A	85013	89414
DU9Z-18124-A	85013	89414
DU9Z18124B	85013	89414
DU9Z-18124-B	85013	89414
DU9Z18125A	85010	
DU9Z-18125-A	85010	
DU9Z18125B	85010	
DU9Z-18125-B	85010	
E0HT18045AA	83309	
E0HT-18045-AA	83309	
E0HT18045AB	83309	
E0HT-18045-AB	83309	
E0HZ18124A	83309	
E0HZ-18124-A	83309	
E1TA18045AA	83309	
E1TA-18045-AA	83309	
E1TD18045AA	83309	
E1TD-18045-AA	83309	
E5HT18045AA	85301	
E5HT-18045-AA	85301	
E5HT18045DA	85301	
E5HT-18045-DA	85301	
E5HT18045EA	85301	
E5HT-18045-EA	85301	
E5HT18080DA	85315	
E5HT-18080-DA	85315	
E5HT18080EA	85315	
E5HT-18080-EA	85315	
E6HT18080AA	83215	
E6HT-18080-AA	83215	
E6HZ18124A	85301	
E6HZ-18124-A	85301	
E6HZ18124D	85301	
E6HZ-18124-D	85301	
E6HZ18125D	83215	
E6HZ-18125-D	83215	
E6HZ18125E	85315	
E6HZ-18125-E	85315	
E6HZ18125F	85315	
E6HZ-18125-F	85315	
E7HZ18124A	85301	
E7HZ-18124-A	85301	
E7XZ18124A	G63386	
E7XZ-18124-A	G63386	
E7XZ18124B	G63500	
E7XZ-18124-B	G63500	
E7XZ18124C	G63511	
E7XZ-18124-C	G63511	
E7XZ18125A	G63350	
E7XZ-18125-A	G63350	
E7XZ18125B	G63387	
E7XZ-18125-B	G63387	
E7XZ18125C	G63409	
E7XZ-18125-C	G63409	
E7XZ18125D	G63406	
E7XZ-18125-D	G63406	
E7XZ18125E	G63406	
E7XZ-18125-E	G63406	
E7XZ18125J	G63299	
E7XZ-18125-J	G63299	
E9HS18045AA	83309	
E9HS-18045-AA	83309	
E9HS18080AA	85716	
E9HS-18080-AA	85716	
E9HZ18124A	83309	
E9HZ-18124-A	83309	
E9HZ18125A	85716	
E9HZ-18125-A	85716	
E9HZ18125AA	85716	
E9HZ-18125-AA	85716	
F0HS18045AA	85006	
F0HS-18045-AA	85006	
F0HT18045AA	85006	
F0HT-18045-AA	85006	
F0HT18045CA	85006	
F0HT-18045-CA	85006	
F0HT18080AA	83122	89406
F0HT-18080-AA	83122	89406
F0HZ18124A	85006	
F0HZ-18124-A	85006	
F0HZ18124B	85006	
F0HZ-18124-B	85006	
F0HZ18125A	83122	89406
F0HZ-18125-A	83122	89406
F1HT18045AA	83309	
F1HT-18045-AA	83309	
F1HT18045CA	83308	
F1HT-18045-CA	83308	
F1HT18045CB	83216	
F1HT-18045-CB	83216	
F1HT18045DA	83312	89409
F1HT-18045-DA	83312	89409
F1HT18045DB	83308	
F1HT-18045-DB	83308	
F1HT18045EA	89402	
F1HT-18045-EA	89402	
F1HT18045EB	89402	

COMPETITIVE & O.E.M. INTERCHANGE LIST

Lista de Intercambios contra Competidores y Equipo Original.

Liste d'interchange de produits compétitifs & d'équipement original (OEM)

F1HT-18045-EB	89402	
F1HT18045GA	85006	
F1HT-18045-GA	85006	
F1HT18045GB	85006	
F1HT-18045-GB	85006	
F1HT18045HB	85006	
F1HT-18045-HB	85006	
F1HT18045KB	85006	
F1HT-18045-KB	85006	
F1HT18045LB	85006	
F1HT-18045-LB	85006	
F1HT18045NA	85040	
F1HT-18045-NA	85040	
F1HT18045RA	89402	
F1HT-18045-RA	89402	
F1HT18045RB	89402	
F1HT-18045-RB	89402	
F1HZ18124A	83309	
F1HZ-18124-A	83309	
F1HZ18124AA	83309	
F1HZ-18124-AA	83309	
F1HZ18124B	83308	
F1HZ-18124-B	83308	
F1HZ18124C	89402	
F1HZ-18124-C	89402	
F1HZ18124D	85006	
F1HZ-18124-D	85006	
F1HZ18124E	85006	
F1HZ-18124-E	85006	
F1HZ18124F	85006	
F1HZ-18124-F	85006	
F1HZ18124G	85006	
F1HZ-18124-G	85006	
F1HZ18124H	85040	
F1HZ-18124-H	85040	
F1HZ18124J	83308	
F1HZ-18124-J	83308	
F1HZ18124K	89402	
F1HZ-18124-K	89402	
F2HT18045BA	85376	

F2HT-18045-BA	85376	
F2HT18045CA	85376	
F2HT-18045-CA	85376	
F2HT18045DA	85006	
F2HT-18045-DA	85006	
F2HT18080DA	85712	
F2HT-18080-DA	85712	
F2HZ18124A	85376	
F2HZ-18124-A	85376	
F2HZ18124B	85301	
F2HZ-18124-B	85301	
F2HZ18124C	85006	
F2HZ-18124-C	85006	
F2HZ18124CA	85006	
F2HZ-18124-CA	85006	
F2HZ18125A	85712	
F2HZ-18125-A	85712	
F2HZ18125AA	85712	
F2HZ-18125-AA	85712	
F4HT18045AB	83314	
F4HT-18045-AB	83314	
F4HT18045AC	83314	
F4HT-18045-AC	83314	
F4HT18045CB	83107	
F4HT-18045-CB	83107	
F4HT18045DA	85063	
F4HT-18045-DA	85063	
F4HT18045EA	83125	
F4HT-18045-EA	83125	
F4HT18080AA	85314	89425
F4HT-18080-AA	85314	89425
F4HT18080AB	85314	89425
F4HT-18080-AB	85314	89425
F4HT18080BA	85001	89410
F4HT-18080-BA	85001	89410
F4TA18045TA	G63455	
F4TA-18045-TA	G63455	
F4TA18080PA	G63461	
F4TA-18080-PA	G63461	
F4TZ18124D	G63414	
F4TZ-18124-D	G63414	
F4TZ18124K	G63455	

F4TZ-18124-K	G63455	
F4TZ18125E	G63461	
F4TZ-18125-E	G63461	
F4TZ18125L	G63406	
F4TZ-18125-L	G63406	
F57Z18125AC	G63679	
F57Z-18125-AC	G63679	
F57Z18125BB	G63679	
F57Z-18125-BB	G63679	
F5HZ18124A	83314	
F5HZ-18124-A	83314	
F5HZ18124AA	83314	
F5HZ-18124-AA	83314	
F5HZ18124B	83107	
F5HZ-18124-B	83107	
F5HZ18124C	85063	
F5HZ-18124-C	85063	
F5HZ18124D	83125	
F5HZ-18124-D	83125	
F5HZ18124DA	83125	
F5HZ-18124-DA	83125	
F5HZ18125A	85314	89425
F5HZ-18125-A	85314	89425
F5HZ18125AA	85314	89425
F5HZ-18125-AA	85314	89425
F5HZ18125B	85001	89410
F5HZ-18125-B	85001	89410
F5HZ18125BA	85001	89410
F5HZ-18125-BA	85001	89410
F5HZ18125DA	85314	89425
F5HZ-18125-DA	85314	89425
F5TZ18124B	G63608	
F5TZ-18124-B	G63608	
F5TZ18125BC	G63607	
F5TZ-18125-BC	G63607	
F5UZ18124A	G63622	
F5UZ-18124-A	G63622	
F5UZ18124B	G63622	
F5UZ-18124-B	G63622	
F5UZ18125A	G63623	
F5UZ-18125-A	G63623	
F5UZ18125C	G63624	
F5UZ-18125-C	G63624	

COMPETITIVE & O.E.M. INTERCHANGE LIST

Lista de Intercambios contra Competidores y Equipo Original.

Liste d'interchange de produits compétitifs & d'équipement original (OEM)

F6HT18045AA	85054	
F6HT-18045-AA	85054	
F6HT18045AC	85054	
F6HT-18045-AC	85054	
F6HT18045BC	85047	89435
F6HT-18045-BC	85047	89435
F6HT18045CC	85055	89439
F6HT-18045-CC	85055	89439
F6HT18045EB	85055	89439
F6HT-18045-EB	85055	89439
F6HT18045EC	85055	89439
F6HT-18045-EC	85055	89439
F6HT18045GB	85030	89440
F6HT-18045-GB	85030	89440
F6HT18045GC	85030	89440
F6HT-18045-GC	85030	89440
F6HT18045HB	85054	
F6HT-18045-HB	85054	
F6HT18045HC	85054	
F6HT-18045-HC	85054	
F6HT18045JB	89402	
F6HT-18045-JB	89402	
F6HT18045JC	89402	
F6HT-18045-JC	89402	
F6HT18045KA	89402	
F6HT-18045-KA	89402	
F6HT18045LA	85376	
F6HT-18045-LA	85376	
F6HT18045MA	85006	
F6HT-18045-MA	85006	
F6HT18080B	83109	
F6HT-18080-B	83109	
F6HT18080CA	85314	89425
F6HT-18080-CA	85314	89425
F6HT18080DA	83109	
F6HT-18080-DA	83109	
F6HT18080EA	85906	89407
F6HT-18080-EA	85906	89407
F6HT18080FC	85013	89414
F6HT-18080-FC	85013	89414
F6HT18080JA	85305	
F6HT-18080-JA	85305	
F6HT18124JC	89402	
F6HT-18124-JC	89402	
F6HT18124KA	89402	

F6HT-18124-KA	89402	
F6HZ18080FC	85013	89414
F6HZ-18080-FC	85013	89414
F6HZ18124A	85054	
F6HZ-18124-A	85054	
F6HZ18124B	83308	
F6HZ-18124-B	83308	
F6HZ18124C	85055	89439
F6HZ-18124-C	85055	89439
F6HZ18124D	85055	89439
F6HZ-18124-D	85055	89439
F6HZ18124E	85055	89439
F6HZ-18124-E	85055	89439
F6HZ18124F	85055	89439
F6HZ-18124-F	85055	89439
F6HZ18124G	85054	
F6HZ-18124-G	85054	
F6HZ18124H	85054	
F6HZ-18124-H	85054	
F6HZ18124J	89402	
F6HZ-18124-J	89402	
F6HZ18124KA	89402	
F6HZ-18124-KA	89402	
F6HZ18124MA	85006	
F6HZ-18124-MA	85006	
F6HZ18125A	85314	89425
F6HZ-18125-A	85314	89425
F6HZ18125B	83109	
F6HZ-18125-B	83109	
F6HZ18125D	85013	89414
F6HZ-18125-D	85013	89414
F6HZ18125JA	85305	
F6HZ-18125-JA	85305	
F6HZ5K407AB	83034	
F6HZ-5K407-AB	83034	
F77A18045AA	G63608	
F77A-18045-AA	G63608	
F77A18080AA	G63679	
F77A-18080-AA	G63679	
F77A18080BA	G63607	
F77A-18080-BA	G63607	
F77D18080BA	G63679	
F77D-18080-BA	G63679	
F7C2Z18124BR	G63929	

F7C2Z-18124-BR	G63929	
F7TA18045AA	G63608	
F7TA-18045-AA	G63608	
F7TA18080BA	G63607	
F7TA-18080-BA	G63607	
F81A18080DCA	G63461	
F81A-18080-DCA	G63461	
F81A18080ZC	83140	
F81A-18080-ZC	83140	
F81D18045CD	83209	89414
F81D-18045-CD	83209	89414
F81D18080CD	83122	89406
F81D-18080-CD	83122	89406
F81Z18124AL	G63622	
F81Z-18124-AL	G63622	
F81Z18124BK	G63809	
F81Z-18124-BK	G63809	
F81Z18124CA	83209	89414
F81Z-18124-CA	83209	89414
F81Z18124PA	85928	
F81Z-18124-PA	85928	
F81Z18125DC	G63461	
F81Z-18125-DC	G63461	
F81Z18125FA	83122	89406
F81Z-18125-FA	83122	89406
F81Z18125ZA	83140	
F81Z-18125-ZA	83140	
F87A18045AH	G63772	
F87A-18045-AH	G63772	
F87A18045CC	G63678	
F87A-18045-CC	G63678	
F87A18045JA	G63678	
F87A-18045-JA	G63678	
F87A18080AC	G63773	
F87A-18080-AC	G63773	
F87A18080BC	G63773	
F87A-18080-BC	G63773	
F87Z18124AA	G63772	
F87Z-18124-AA	G63772	
F87Z18124CA	G63678	
F87Z-18124-CA	G63678	
F87Z18124JA	G63678	

COMPETITIVE & O.E.M. INTERCHANGE LIST

Lista de Intercambios contra Competidores y Equipo Original.

Liste d'interchange de produits compétitifs & d'équipement original (OEM)

F87Z-18124-JA	G63678	
F87Z18125AA	G63773	
F87Z-18125-AA	G63773	
F87Z18125BA	G63773	
F87Z-18125-BA	G63773	
F87Z18125CA	G63773	
F87Z-18125-CA	G63773	
F87Z18125RA	G63775	
F87Z-18125-RA	G63775	
FC4418045BB	85181	
FC44-18045-BB	85181	
FC4418080AB	85180	
FC44-18080-AB	85180	
FC4Z18124A	85181	
FC4Z-18124-A	85181	
FC4Z18124B	85181	
FC4Z-18124-B	85181	
FC4Z18124HB	83135	
FC4Z-18124-HB	83135	
FC4Z18125A	85180	
FC4Z-18125-A	85180	
FC4Z18125C	83168	
FC4Z-18125-C	83168	
FC4Z18125D	83148	
FC4Z-18125-D	83148	
FC4Z18125E	85978	
FC4Z-18125-E	85978	
HU9418045AA	83209	89414
HU9418045BA	83209	89414
HU9Z18124B	83209	89414
HU9Z18124C	83209	89414
HU9Z18125B	83122	89406
HU9Z-18125-B	83122	89406
TACAA18045A	83216	
TACAA-18045-A	83216	
TANNA18045A	83312	89409
TANNA-18045-A	83312	89409
TDBA18045A	83219	
TDBA-18045-A	83219	
TDBA18045B	83219	
TDBA-18045-B	83219	
TDBE18045A	83219	
TDBE-18045-A	83219	
TFAA18045B	83219	
TFAA-18045-B	83219	
TFAA18045C	83219	
TFAA-18045-C	83219	
TFAA18080A	85307	
TFAA-18080-A	85307	
THAB18045A	83219	
THAB-18045-A	83219	
THAB18045B	83219	
THAB-18045-B	83219	
TQSH18045A	83309	
TQSH-18045-A	83309	
XC3518045AB	83131	
XC35-18045-AB	83131	
XC3518045AD	83131	
XC35-18045-AD	83131	
XC3518045JA	83131	
XC35-18045-JA	83131	
XC3Z18124JA	83131	
XC3Z-18124-JA	83131	
XC4518045AA	83216	
XC45-18045-AA	83216	
XL2418045BA	G63678	
XL24-18045-BA	G63678	
XL2418045EA	G63678	
XL24-18045-EA	G63678	
XL2418045JA	G63678	
XL24-18045-JA	G63678	
XL2418080BA	G63679	
XL24-18080-BA	G63679	
XL2418080CA	G63679	
XL24-18080-CA	G63679	
XL2418080EA	G63679	
XL24-18080-EA	G63679	
XL2Z18124BA	G63678	
XL2Z-18124-BA	G63678	
XL2Z18124EA	G63678	
XL2Z-18124-EA	G63678	
XL2Z18124JA	G63678	
XL2Z-18124-JA	G63678	
XL2Z18125BA	G63679	
XL2Z-18125-BA	G63679	
XL2Z18125CA	G63679	
XL2Z-18125-CA	G63679	
XL2Z18125EA	G63679	
XL2Z-18125-EA	G63679	
XL5818080AC	G63773	
XL58-18080-AC	G63773	
XL5Z18125AA	G63773	
XL5Z-18125-AA	G63773	
YL5Z18124AA	G63772	
YL5Z-18124-AA	G63772	

FOREST RIVER		
O.E.M #	Gabriel	Upgrade
141700131809	85029	
141700131810	83160	
1616736000	85029	
16-16736-000	85029	
1616737000	83160	
16-16737-000	83160	
1616873000	85029	
16-16873-000	85029	
1616874000	83160	
16-16874-000	83160	
1618103000	85900	
16-18103-000	85900	
1C34-18045-AA	83209	89414
1C34-18045-JA	83209	89414
481700000493	85900	
66153002	83124	89407
66153-002	83124	89407
9U94-18045-AA	83209	89414
9U9418080AA	83122	89406
9U94-18080-AA	83122	89406
9U9Z-18124-A	83209	89414
9U9Z18125A	83122	89406
9U9Z-18125-A	83122	89406
ASH-1022	83209	89414
ASH1023	83122	89406
ASH-1023	83122	89406
ASH-1136	G63623	
ASH-1154	G63622	
ASH-1205	83209	89414

COMPETITIVE & O.E.M. INTERCHANGE LIST

Lista de Intercambios contra Competidores y Equipo Original.

Liste d'interchange de produits compétitifs & d'équipement original (OEM)

ASH1206	83122	89406
ASH-1206	83122	89406
ASH-1228	83209	89414
ASH-1229	83209	89414
ASH1230	83122	89406
ASH-1230	83122	89406
ASH137	83122	89406
ASH-137	83122	89406
ASH-25822	83209	89414
ASH-25823	83209	89414
ASH25824	83122	89406
ASH-25824	83122	89406
ASH-294	83209	89414
AT-620	83209	89414
AT621	83122	89406
AT-621	83122	89406
AT-766	83209	89414
F4BE5C832MO	83124	89407
F4-BE5-C832-MO	83124	89407

FREIGHTLINER		
O.E.M #	Gabriel	Upgrade
1012030002	85320	89429
10-12030-002	85320	89429
1012032000	85320	89429
10-12032-000	85320	89429
1012032001	85320	89429
10-12032-001	85320	89429
1012032002	85320	89429
10-12032-002	85320	89429
1012032003	85320	89429
10-12032-003	85320	89429
1012032004	85320	89429
10-12032-004	85320	89429
1012046000	85320	89429
10-12046-000	85320	89429
1012388000	85920	89503
10-12388-000	85920	89503
1012390000	85920	89503
10-12390-000	85920	89503
1012396000	85918	89449
10-12396-000	85918	89449
1012542000	85901	
10-12542-000	85901	
1012703000	85918	89449
10-12703-000	85918	89449
1013021000	85918	89449
10-13021-000	85918	89449
1013051001	85005	89430
10-13051-001	85005	89430
1013063000	85918	89449
10-13063-000	85918	89449
1013205000	85918	89449
10-13205-000	85918	89449
1013211000	85918	89449
10-13211-000	85918	89449
1013592000	85959	
10-13592-000	85959	
1013634000	85918	89449
10-13634-000	85918	89449
1013684000	85918	89449
10-13684-000	85918	89449
1013759000	85006	
10-13759-000	85006	
1013760000	85959	
10-13760-000	85959	
1013776000	85005	89430
10-13776-000	85005	89430
1013809000	85958	
10-13809-000	85958	
1013859000	85005	89430
10-13859-000	85005	89430
1014193000	83396	
10-14193-000	83396	
1014282000	83396	
1014282000	83396	
10-14282-000	83396	
1014317000	83396	
10-14317-000	83396	
12010012	83023	
1201-0012	83023	
12010054	83021	
1201-0054	83021	
12011043	83025	
1201-1043	83025	
12011044	83025	
1201-1044	83025	
12020012	83023	
1202-0012	83023	
12020032	83016	
1202-0032	83016	
12020042	83025	
1202-0042	83025	
12020043	83025	
1202-0043	83025	
12020044	83025	
1202-0044	83025	
12020054	83021	
1202-0054	83021	
12021043	83025	
1202-1043	83025	
12021044	83025	
1202-1044	83025	
1398980	83127	
141700000377	83160	
141700000378	83160	
141700131809	85029	
141700131810	83160	
141700131975	83160	
1610688000	85042	
16-10688-000	85042	
1611133000	85007	
16-11133-000	85007	
1612117000	85007	
16-12117-000	85007	
1613947000	85319	89428
16-13947-000	85319	89428
1613957000	85724	89443
16-13957-000	85724	89443
1614259000	85331	
16-14259-000	85331	
1614577000	85043	
16-14577-000	85043	
1614667000	85005	89430
16-14667-000	85005	89430
1614668000	83127	
16-14668-000	83127	
1614669000	G63403	
16-14669-000	G63403	
1614759000	85000	89436
16-14759-000	85000	89436
1614794000	83154	
16-14794-000	83154	
1615064000	83154	
16-15064-000	83154	
1615394000	83120	
16-15394-000	83120	
1615436000	83154	
16-15436-000	83154	

COMPETITIVE & O.E.M. INTERCHANGE LIST

Lista de Intercambios contra Competidores y Equipo Original.

Liste d'interchange de produits compétitifs & d'équipement original (OEM)

1615473000	83157	
16-15473-000	83157	
1615474000	83157	
16-15474-000	83157	
1615475000	83164	
16-15475-000	83164	
1615591000	85043	
16-15591-000	85043	
1615592000	83154	
16-15592-000	83154	
1615676000	85058	89431
16-15676-000	85058	89431
1615705000	83120	
16-15705-000	83120	
1615755000	85043	
16-15755-000	85043	
1615765000	85921	
16-15765-000	85921	
1615770000	85956	
16-15770-000	85956	
1615805000	83120	
16-15805-000	83120	
1615817000	85724	89443
16-15817-000	85724	89443
1615934000	83120	
16-15934-000	83120	
1616043000	85043	
16-16043-000	85043	
1616082000	85043	
16-16082-000	85043	
1616083000	85331	
16-16083-000	85331	
1616093000	83160	
16-16093-000	83160	
1616262000	83120	
16-16262-000	83120	
1616442000	83134	
16-16442-000	83134	
1616486000	83134	
16-16486-000	83134	
1616542000	83154	

16-16542-000	83154	
1616577000	85335	
16-16577-000	85335	
1616736000	85029	
16-16736-000	85029	
1616737000	83160	
16-16737-000	83160	
1616765000	85006	
16-16765-000	85006	
1616826000	85043	
16-16826-000	85043	
1616827000	85331	
16-16827-000	85331	
1616836000	83154	
16-16836-000	83154	
1616873000	85029	
16-16873-000	85029	
1616874000	83160	
16-16874-000	83160	
1617144000	85900	
16-17144-000	85900	
1617211000	85909	
16-17211-000	85909	
1617361000	85900	
16-17361-000	85900	
1617684000	85058	89431
16-17684-000	85058	89431
1617759000	85919	
16-17759-000	85919	
1617760000	85331	
16-17760-000	85331	
16-18075-000	83160	
1618076000	83160	
16-18076-000	83160	
1618094000	85959	
16-18094-000	85959	
1618103000	85900	
16-18103-000	85900	
1618455000	85918	89449
16-18455-000	85918	89449
1618456000	85959	

16-18456-000	85959	
1618705000	85007	
16-18705-000	85007	
1618706000	85331	
16-18706-000	85331	
1618707000	85921	
16-18707-000	85921	
1618708000	85724	89443
16-18708-000	85724	89443
1618709000	83134	
16-18709-000	83134	
1618710000	83134	
16-18710-000	83134	
1618711000	85335	
16-18711-000	85335	
1618713000	85122	
16-18713-000	85122	
1619138000	85058	89431
16-19138-000	85058	89431
16-20552-000	83154	
1620552000	83154	
16-20628-000	85058	89431
1620632000	85919	
16-20632-000	85919	
16-22004-000	85058	89431
1672501	83126	89430
16725-01	83126	89430
1745500	89430	
1829846000	83009	
18-29846-000	83009	
1830378	83006	
18-30378	83006	
1830378000	83001	
18-30378-000	83001	
1832999000	83001	
18-32999-000	83001	
1832999001	83006	
18-32999-001	83006	
1837813000	83044	
18-37813-000	83044	
1841762000	83038	
18-41762-000	83038	

COMPETITIVE & O.E.M. INTERCHANGE LIST

Lista de Intercambios contra Competidores y Equipo Original.

Liste d'interchange de produits compétitifs & d'équipement original (OEM)

1841762001	83047	
18-41762-001	83047	
1841762002	83038	
18-41762-002	83038	
1844321000	83009	
18-44321-000	83009	
1845067000	83034	
18-45067-000	83034	
1847349000	83039	
18-47349-000	83039	
1847350000	83040	
18-47350-000	83040	
1860295000	83006	
18-60295-000	83006	
1860764000	83038	
18-60764-000	83038	
1860765000	83038	
18-60765-000	83038	
1860765001	83047	
18-60765-001	83047	
1860765002	83038	
18-60765-002	83038	
1860766000	83040	
18-60766-000	83040	
1860767000	83039	
18-60767-000	83039	
1860769000	83009	
18-60769-000	83009	
1860772000	83026	
18-60772-000	83026	
1860773000	83027	
18-60773-000	83027	
1867845000	83906	
18-67845-000	83906	
1869674000	83906	
18-69674-000	83906	
1873207000	83911	
18-73207-000	83911	
1949501	83126	89430
19495-01	83126	89430
3638112	G63183	
4036892	G63605	
471700000440	85959	
471700000447	85919	
471700000449	85918	89449
471700000466	85959	
471700000470	85918	89449
471700002726	85918	89449
471700002727	85959	
471700002808	85724	89443
471700002809	85724	89443
471700002990	85007	
471700002991	85959	
471700002992	85331	
471700002993	85921	
471700002994	83134	
471700002995	83134	
471700002996	85335	
471700003009	85006	
471700003011	85058	89431
471700003070	85122	
471700003920	85958	
471700005079	85005	89430
471700006269	85932	89453
471700011302	85058	89431
471700131155	85918	89449
471700131331	85932	89453
471700131646	85918	89449
471700131775	85006	
471700131778	85331	
471700131974	85029	
4790213	83122	89406
47902-13	83122	89406
481700000477	85900	
481700000493	85900	
481700006848	85724	89443
481700125969	85956	
481700131919	85900	
535228	85302	89420
58913003	85932	89453
58913-003	85932	89453
58913003L	85932	89453
58913-003L	85932	89453
58913012	85932	89453
58913-012	85932	89453
58913012L	85932	89453
58913-012L	85932	89453
58913015	85200	
58913-015	85200	
60680004	83143	
60680-004	83143	
60680004L	83143	
60680-004L	83143	
60680005	83142	
60680-005	83142	
60680005L	83142	
60680-005L	83142	
61300224	85918	89449
61300240	85918	89449
650224	83225	
651352	85042	
654654	85043	
654739	83009	
654819	83001	
654831	83006	
654918	83118	
654953	85058	89431
654990	83038	
659060	85920	89503
659062	83134	
659063	83134	
659079	83040	
659080	83039	
659125	83047	
659178	83038	
659227	85058	89431
659288	83006	
659300	85005	89430
660235	85042	
665174	85060	
665236	85007	
665409	85009	
66554540I	89430	
671908	85918	89449
671945	85920	89503
671946	85921	
680008	85300	89419
680009	85302	89420
680017	85302	89420
6803230200	85043	
6803230300	85006	

COMPETITIVE & O.E.M. INTERCHANGE LIST

Lista de Intercambios contra Competidores y Equipo Original.

Liste d'interchange de produits compétitifs & d'équipement original (OEM)

6803260000	83120	
680339	85724	89443
680442	85319	89428
680511	85331	
680611	85724	89443
680651	85335	
680782	85302	89420
6813230900	85009	
681-323-0900	85009	
6813231100	85301	
681-323-1100	85301	
6813260400	85319	89428
681-326-0400	85319	89428
6818910205	83017	
681-891-02-05	83017	
70029	85308	89422
70042	85302	89420
814903003482	83040	
814903003483	83039	
814903003486	83047	
814903003496	83009	
814903003528	83038	
814903012666	83906	
814903015188	83906	
814903018451	83911	
90044162	83128	89436
90045083	85910	
A90193	83396	
GBL 650361	83017	
GBL 651375	83119	
GBL654725	83120	
GBL654726	83120	
GBL654727	83120	
GBL654728	83120	
GBL654729	83120	
GBL654730	83120	
GBL654731	83120	
GBL654732	83120	
GBL654733	83120	
GBL654734	83120	
GBL654735	83120	
GBL654918	83118	
GBL665538	85006	

H60680004	83143	
HDR60680005	83142	
HDR60680-005	83142	
MAE 16949	83120	
MAE 16950	83118	
MAE16950	83118	
P117099	83120	
P117146	83118	
RW24285	83119	
SDA471700000440	85959	
SDA471700002809	85724	89443
SDA471700002991	85959	
SDA471700003920	85958	
X9007009-73	83396	

FRUEHAUF		
O.E.M #	Gabriel	Upgrade
1445910	85300	89419
144-5910	85300	89419
5116117	83122	89406
5116-117	83122	89406
5352858	85305	
680117	85300	89419
680298	85321	
UCA01113	85304	
UCA-01113	85304	
UCA5431	85305	
UCA-5431	85305	
UCD006216001	83203	89436
UCD-006216-001	83203	89436
UCD62161	83203	89436
UCD-6216-1	83203	89436
UCE12951	85300	89419
UCE-1295-1	85300	89419
UCE1295901	85300	89419
UCE-1295-901	85300	89419
UCE2983000	85322	
UCE-2983-000	85322	
UCE2983001	85322	
UCE-2983-001	85322	
UCE29831	85322	
UCE-2983-1	85322	
UCE93991	83122	89406
UCE-9399-1	83122	89406
UCF8339001	85321	

UCF-8339-001	85321	
UCF8339002	85321	
UCF-8339-002	85321	
UEY 1124001	85030	89440
UEY 1124-001	85030	89440

FWD TRUCK		
O.E.M #	Gabriel	Upgrade
450739	85302	89420

GENERAL TRAILER CO.		
O.E.M #	Gabriel	Upgrade
1201	83125	
120-1	83125	
12608	83125	

GEORGIE BOY MANUFACTURING		
O.E.M #	Gabriel	Upgrade
1C34-18045-AA	83209	89414
1C34-18045-JA	83209	89414
66153002	83124	89407
66153-002	83124	89407
9U94-18045-AA	83209	89414
9U9418080AA	83122	89406
9U94-18080-AA	83122	89406
9U9Z-18124-A	83209	89414
9U9Z18125A	83122	89406
9U9Z-18125-A	83122	89406
ASH-1022	83209	89414
ASH1023	83122	89406
ASH-1023	83122	89406
ASH-1136	G63623	
ASH-1154	G63622	
ASH-1205	83209	89414
ASH1206	83122	89406
ASH-1206	83122	89406
ASH-1228	83209	89414
ASH-1229	83209	89414
ASH1230	83122	89406
ASH-1230	83122	89406
ASH137	83122	89406
ASH-137	83122	89406
ASH-25822	83209	89414
ASH-25823	83209	89414
ASH25824	83122	89406
ASH-25824	83122	89406
ASH-294	83209	89414
AT-620	83209	89414
AT621	83122	89406
AT-621	83122	89406
AT-766	83209	89414

COMPETITIVE & O.E.M. INTERCHANGE LIST
Lista de Intercambios contra Competidores y Equipo Original.
Liste d'interchange de produits compétitifs & d'équipement original (OEM)

F4BE5C832MO	83124	89407
F4-BE5-C832-MO	83124	89407

GILLIG BROS.		
O.E.M #	Gabriel	Upgrade
1145291N000	85916	89430
1583470	85051	
200171	85304	
200-171	85304	
5302132	85723	
53-02132	85723	
5302133000	85318	
53-02133-000	85318	
5313952000	85722	
53-13952-000	85722	
5314005000	85723	
53-14005-000	85723	
5314010	85318	
53-14010	85318	
53176	85304	
53-176	85304	
5324685	85723	
53-24685	85723	
57113	83219	
57131	83216	
665568	85051	
680009	85302	89420
680333	85708	
695109	85723	
695110	85318	
70034	85302	89420
8201878	83122	89406
82-01878	83122	89406
8221542000	85716	
82-21542-000	85716	
8230159000	85708	
82-30159-000	85708	
90044046	83123	89405
90044683	83122	89406
90044769	83207	89407
90044770	83207	89407
901908	85723	
90-1908	85723	
901951SP1	85734	
90-1951-SP1	85734	
901968	85712	
90-1968	85712	
902164 SP1	85723	
90-2164 SP1	85723	
902423	85723	
90-2423	85723	
9051024	85916	89430
90F1912	85318	
90F-1912	85318	
H530213214005	85723	
H53-02132-14005	85723	
H5320415006	85051	
H53-20415-006	85051	
MR6394	85723	

GLAVAL BUS CO.		
O.E.M #	Gabriel	Upgrade
3578858C1	85926	
3578858C2	85926	
3584116C1	83175	
3584116C2	83175	
3584118C2	85928	
471700011530	85181	
471700011531	85180	
4C4Z18124JB	85928	
4C4Z-18124-JB	85928	
4C4Z18124QA	83175	
4C4Z-18124-QA	83175	
4C4Z18124RA	85928	
4C4Z-18124-RA	85928	
4C4Z-18125-B	83317	
4C4Z18125DA	85926	
4C4Z-18125-DA	85926	
501906C92	83317	
AA616	83175	
AA-616	83175	
AA617	85928	
AA-617	85928	
ASH-1136	G63623	
ASH-1154	G63622	
ASH24658	85181	
ASH-24658	85181	
ASH24659	85181	
ASH-24659	85181	
ASH24660	85180	
ASH-24660	85180	
ASH24661	83317	
AT812	85928	
AT-812	85928	
FC4418045BB	85181	
FC44-18045-BB	85181	
FC4418080AB	85180	
FC44-18080-AB	85180	
FC4Z18124A	85181	
FC4Z-18124-A	85181	
FC4Z18124B	85181	
FC4Z-18124-B	85181	
FC4Z18125A	85180	
FC4Z-18125-A	85180	

GMC		
O.E.M #	Gabriel	Upgrade
12010054	83021	
1201-0054	83021	
12011043	83025	
1201-1043	83025	
12020012	83023	
1202-0012	83023	
12020032	83016	
1202-0032	83016	
12020054	83021	
1202-0054	83021	
12021043	83025	
1202-1043	83025	
12474915	83122	89406
12474917	83137	
15123676	83136	
1516301681	83515	
1-51630-168-1	83515	
1516302170	83114	
1-51630-217-0	83114	

COMPETITIVE & O.E.M. INTERCHANGE LIST

Lista de Intercambios contra Competidores y Equipo Original.

Liste d'interchange de produits compétitifs & d'équipement original (OEM)

1516302171	83114	
1-51630-217-1	83114	
1516302191	83114	
1-51630-219-1	83114	
15174898	83136	
15174902	85071	
15588554	83136	
15740554	83137	
15887728	83136	
1591501	85722	
15963161	83122	89406
19152843	83136	
22002293	83126	89430
22002295	83303	
22007701	83126	89430
22007703	83303	
22007750	83207	89407
22007751	83303	
22007753	83303	
22012065	85304	
22012067	85700	
22012082	85702	
22012083	85711	
22012083GS	85711	
22012090	85308	89422
22012091	85303	89422
22012095	83126	89430
22012096	83221	
22012114	85700	
22012131	85711	
22012166	83126	89430
22012169	83221	
22012196	83221	
22017530	83303	
22017531	83303	
22024061	85704	
22025067	85704	
22025305	85704	
22045526	85702	
22046481	85702	
22046483	85304	
22046489	85303	89422
22052014	85702	
22052336	85304	
22064230	83136	
22064232	85071	
22064233	83136	
22064432	83221	
22064804	83136	
22064805	83136	
22064806	83136	
22064807	83136	
22065218	G63347	
22065251	85030	89440
22165187	83136	
22165188	83136	
22165189	83136	
22166442	83136	
3082284	83400	
3166657	85700	
3171068	83216	
3171069	85304	
3171462	83126	89430
3171696	85307	
3172948	85303	89422
3178106	85700	
3178157	85700	
3178233	85734	
3178507	85700	
3178995	85700	
3182842	85711	
3188599	85711	
3188626	85300	89419
3188729	85303	89422
3189265	85700	
3192333	85700	
3192416	85711	
3192657	83216	
3192890	83126	89430
3192891	83221	
3192892	83221	
359010001	83209	89414
35901-0001	83209	89414
359010003	85301	
35901-0003	85301	
359010004	83219	
35901-0004	83219	
359010005	83219	
35901-0005	83219	
359010017	83314	
35901-0017	83314	
373010016	85026	
37301-0016	85026	
373010021	85026	
37301-0021	85026	
373013202	85026	
37301-3202	85026	
4939852	85308	89422
4939967	85308	89422
4940600	83209	89414
4940601	83216	
4940606	83126	89430
4940614	83216	
4940627	83203	89436
4940640	83216	
4940650	83207	89407
4940654	83216	
4940660	83207	89407
4963844	85307	
4963853	83216	
4963854	83216	
4974401	85700	
4975429	85300	89419
4975467	83207	89407
4975479	83400	
4975480	83400	
4975494	83207	89407
4975497	83126	89430
4975501	85700	
4975510	83221	
4975511	83303	
4975516	85702	
4975518	85704	
4975538	85700	
4975549	83216	
4975550	85702	
4975552	85711	
4984526	83216	

COMPETITIVE & O.E.M. INTERCHANGE LIST

Lista de Intercambios contra Competidores y Equipo Original.

Liste d'interchange de produits compétitifs & d'équipement original (OEM)

50716	85702	
507-16	85702	
50719	85700	
507-19	85700	
5171068	83216	
5304059	85700	
5316784	85700	
5316791	83219	
5316792	85305	
5316793	85305	
5316794	85700	
5321920	85307	
5321929	85307	
5348631	83203	89436
5352857	85700	
5352858	85305	
5353054	85303	89422
5355798	85307	
5357955	85300	89419
5357956	85734	
5357959	85300	89419
5361994	85734	
5374779	85308	89422
5374999	85307	
5385939	85307	
5392387	85303	89422
5394448	85305	
5394467	85305	
5455798	85307	
5513489	83216	
5513716	85304	
5516459	85305	
5522794	85308	89422
5522818	85305	
5527001	85300	89419
5527271	85700	
5527272	85700	
5527606	85305	
5531027	85301	
5531435	85307	
5531436	85307	
5531437	85307	

5532026	85304	
5532425	83207	89407
5532433	83207	89407
5532675	85307	
5533699	85302	89420
5534430	85303	89422
5534439	85304	
5534447	85303	89422
5544060	85302	89420
5544112	83216	
5544581	85302	89420
5544716	85304	
5544717	85304	
5544812	83308	
5549899	83207	89407
5549924	85700	
5549925	85304	
5552111	85304	
5552112	85307	
5552114	83216	
5552206	83214	
5552209	83215	
5552210	85308	89422
5552244	85308	89422
5552285	83214	
5552451	85308	89422
5552452	85303	89422
5552453	85301	
5552454	85302	89420
5552456	85307	
5554184	85302	89420
5554589	85307	
5554596	85303	89422
5554814	85302	89420
5554959	83401	
5554995	85305	
5559363	83203	89436
5585939	85307	
684280	83209	89414
8-51630-666-0	85012	89413
87252000003	85704	
87-2520-00003	85704	
88982682	83136	
88982684	83136	
88982686	85071	

8940575930	83114	
8-94057-593-0	83114	
8944549860	83515	
8-94454-986-0	83515	
8944549870	83515	
8-94454-987-0	83515	
8970830290	83515	
8-97083-029-0	83515	
8972019600	83515	
8-97201-960-0	83515	
8972536200	83515	
8-97253-620-0	83515	
8972536640	83159	
8-97253664-0	83159	
8972536650	83159	
8-97253665-0	83159	
8980980580	83159	
898098-0580	83159	
8980980581	83159	
898098-0581	83159	
8980980590	83159	
898098-0590	83159	
8980981250	83515	
898098-1250	83515	
8980981270	83515	
898098-1270	83515	
94033786	83114	
94051090	83114	
94057593	83114	
94454987	83515	
9516306471	83515	
9-51630-647-1	83515	
9516306660	85012	89413
9-51630-666-0	85012	89413
97083027	83515	
97083029	83515	
97201960	83515	
97221000156	85702	
97-2210-00156	85702	
97221000164	85708	
97-2210-00164	85708	

COMPETITIVE & O.E.M. INTERCHANGE LIST

Lista de Intercambios contra Competidores y Equipo Original.

Liste d'interchange de produits compétitifs & d'équipement original (OEM)

97221000170	85733	
97-2210-00170	85733	
97253616	83515	
97253620	83515	
97253621	83515	
97253623	83515	
97253651	83159	
97253664	83159	
97253665	83159	
98098058	83159	
98098059	83159	
98098125	83515	
98098127	83515	
98232671	83515	
U0109014	83400	
U0109-014	83400	

GOLD		
O.E.M #	Gabriel	Upgrade
5000736	83039	
5000738	85071	
5000740	83105	
5000741	83136	
5000742	83308	
5000743	83107	
5000744	85090	
5000745	83314	
5000745	85013	89414
5000747	83101	
5000748	83135	
5000749	85308	89422
5000750	83035	
5000751	85055	89439
5000754	83015	
5000758	85055	89439
5000759	83142	
5000760	85934	
5000761	85024	
5000762	83160	
5000764	85957	
5000765	83216	
5000768	83401	

5000772	85120	
5000773	85065	
5000776	85005	89430
5000777	83143	
5000778	83054	
5000781	85926	
5000782	83017	
5000783	83025	
5000784	85080	
5000785	83216	
5000786	83103	
5000787	85938	
5000789	83110	
5000790	83180	
5000792	83134	
5000793	83400	
5000796	632147	
5000797	85307	
5000798	85712	
5000799	85711	
5000800	85736	
5000802	85341	
5000804	85308	89422
5000806	83027	
5000807	85343	
5000808	85916	89430
5000809	83635	
5000813	83221	
5000816	85956	
5000818	83120	
5000819	83067	
5000822	83004	
5000825	83225	
5000826	85029	
5000827	85908	
5000828	83044	
5000830	83175	
5000831	83024	
5000835	83150	
5000839	83131	
5000840	83162	

5000844	83030	
5000849	85054	
5000850	83053	
5000852	85376	
5000853	83101	
5000855	83154	
5000856	85978	
5000857	85929	
5000859	83031	
5000861	83025	
5000862	83140	
5000865	85910	
5000869	83216	
5000870	83022	
5000871	83164	
5000872	85082	
5000877	85722	
5000879	85970	
5000880	85711	
5000881	85736	
8150240	83125	
8150241	83207	89407
8150242	83128	89436
8150243	83009	
8150371	83127	
8150372	83137	
8160090	85000	89436
8160091	85006	
8160098	83456	89447
8160099	83318	
8160100	85052	
8160101	85001	89410
8160102	83215	
8160103	83312	89409
8160111	85066	89448
8160112	85061	89450
8160113	85931	89458
8160114	85918	89449
8160115	85031	
8160116	85012	89413
8160118	85900	
8160119	85902	
8160120	85069	89455

COMPETITIVE & O.E.M. INTERCHANGE LIST

Lista de Intercambios contra Competidores y Equipo Original.

Liste d'interchange de produits compétitifs & d'équipement original (OEM)

8160189	85937	
8160195	85013	89414
8160195	85043	
8160522	83029	
8160523	83021	
8160848	85088	
8160849	83051	
8160906	83147	
8160907	85036	89405
8160908	83019	
8160909	83123	89405
8160910	83050	
8160911	83041	
8160912	83001	
8160935	83140	
8160938	85062	89408
8170098	85045	
8180050	85001	89410
8180139	85936	89456
8180171	85958	
8180172	85919	
8180173	85954	
8190008	85320	89429
8190076	85300	89419
8190087	85738	
8190096	85729	
8190097	85727	
9150063	83216	
9150639	83009	
9160091	85006	
9160092	85043	
9160093	83317	
9160094	85003	89411
9160095	85062	89408
9160096	85001	89410
9160097	85001	89410
9160117	85320	89429
9160121	85067	89451
9160190	85070	89459
9160268	85058	89431
9160470	83124	89407
9160488	83456	89447
9160493	83136	
9160498	83136	
9160500	85000	89436
9160513	85029	
9160536	85005	89430
9160538	85045	
9160539	83203	89436
9160540	85052	
9160545	83154	
9160546	83008	
9160547	83001	
9160697	G63622	
9160761	G63461	
9160789	G63866	
9160820	83312	89409
9160933	83209	89414
9160934	83047	
9160936	83048	
9160972	83025	
9160976	83053	
9160980	83135	
9160983	83112	
9170007	85918	89449
9180126	85012	89413
9180130	85005	89430
9180131	85001	89410
9180134	85921	
9180136	83128	89436
9180137	85924	89457
9180138	85954	
9180140	85061	89450
9180142	85323	89436
9180143	85918	89449
9180144	85303	89422
9180145	85067	89451
9180146	85033	89427
9180147	83136	
9180148	85064	
9180149	85900	
9180151	85070	89459
9180152	85003	89411
9180153	85931	89458
9180184	83163	
9180186	85933	89454
9180187	85084	89460
9180188	85069	89455
9180190	85072	
9180191	85053	89442
9180192	85026	
9180193	85030	89440
9180194	85014	
9180195	83111	
9180196	83122	89406
9180197	85046	89434
9180198	85901	
9180199	85301	
9190007	85724	89443
9450993	646155	

GOSHEN COACH		
O.E.M #	Gabriel	Upgrade
ASH1136	G63623	
ASH-1136	G63623	
ASH1154	G63622	
ASH-1154	G63622	

GRANNING SUSPENSION		
O.E.M #	Gabriel	Upgrade
1085	83214	
2697	85712	
680162	85300	89419
701071-01	646155	
OE12425	83214	

GREAT DANE TRAILER		
O.E.M #	Gabriel	Upgrade
1816301	83207	89407
18163-01	83207	89407
1816401	83122	89406
18164-01	83122	89406
1816501	85006	
18165-01	85006	
HENS20001	83389	89436
HENS-20001	83389	89436
HENS20002	85000	89436
HENS-20002	85000	89436
HENS20126	85323	89436
HENS-20126	85323	89436
HENS21292	85052	
HENS-21292	85052	
HENS23566	85000	89436
HENS-23566	85000	89436
HENS23649	85064	
HENS-23649	85064	
HENS24088	83389	89436
HENS24088	85000	89436
HENS-24088	83389	89436

COMPETITIVE & O.E.M. INTERCHANGE LIST
Lista de Intercambios contra Competidores y Equipo Original.
Liste d'interchange de produits compétitifs & d'équipement original (OEM)

HENS-24088	85000	89436
MER202447	85919	
REY1816501	85006	
REY18165-01	85006	

GRECH MOTORS		
O.E.M #	Gabriel	Upgrade
ASH-1136	G63623	
ASH-1154	G63622	

GREYHOUND BUS		
O.E.M #	Gabriel	Upgrade
12TA01013	85303	89422
12TA-01-013	85303	89422
3166657	85700	
3178157	85700	
3192333	85700	
690029	85700	

GRUMMAN BUS		
O.E.M #	Gabriel	Upgrade
22025067	85704	
22025305	85704	
690029	85700	
97221000001	85704	
97-2210-00001	85704	
97221000002	85704	
97-2210-00002	85704	
97221000003	85704	
97-2210-00003	85704	
97221000004	85704	
97-2210-00004	85704	
97221000005	85704	
97-2210-00005	85704	

GULF STREAM COACH		
O.E.M #	Gabriel	Upgrade
141700131809	85029	
141700131810	83160	
1616736000	85029	
16-16736-000	85029	
1616737000	83160	
16-16737-000	83160	
1616873000	85029	
16-16873-000	85029	
1616874000	83160	
16-16874-000	83160	
1618103000	85900	
16-18103-000	85900	
481700000493	85900	
ASH-1136	G63623	
ASH-1154	G63622	

HARDEE MFG.		
O.E.M #	Gabriel	Upgrade
8030223	83207	89407
AS789B	85014	

HAUSMAN		
O.E.M #	Gabriel	Upgrade
695110	85318	
695119	85702	

HENDRICKSON TRAILER SUSPENSION SYSTEMS		
O.E.M #	Gabriel	Upgrade
579052	85006	
57905-2	85006	
60675004	85006	
60675-004	85006	
654951	85000	89436
659024	85052	
665190	85006	
665246	85043	
665267	85029	
665405	85030	89440
665406	85010	
665531	85000	89436
665532	85013	89414
665533	85005	89430
665536	85000	89436
665693	85064	
665694	85052	
665698	85911	
665733	85045	
665756	85000	89436
665758	85064	
665759	85052	
665760	85045	
665761	85911	
665763	85079	
665764	85029	
665765	83150	
665766	85000	89436
665767	85045	
671779	89414	
671948	85000	89436
680102	85712	
680341	85323	89436
680463	89440	
680467	85323	89436
680509	85738	
680565	85738	
680566	85938	
680568	85323	89436
680570	89437	
680571	85738	
680573	85939	
680579	85939	
680614	85338	
680616	89430	
680617	85337	
680702	85323	89436
680756	85323	89436
680769	85911	
680776	85338	
98583019	85323	89436
98583-019	85323	89436
98583020	89414	
98583-020	89414	
A10023	85000	89436
A-10023	85000	89436
A10348	85043	
A-10348	85043	
A11931	85000	89436
A-11931	85000	89436
A-14496	646155	
A14583	85000	89436
A-14583	85000	89436
A1667	85000	89436
A-1667	85000	89436
A1668	85000	89436
A-1668	85000	89436
A20001	83389	89436

COMPETITIVE & O.E.M. INTERCHANGE LIST

Lista de Intercambios contra Competidores y Equipo Original.

Liste d'interchange de produits compétitifs & d'équipement original (OEM)

A-20001	83389	89436
A20002	85000	89436
A-20002	85000	89436
A20126	85323	89436
A-20126	85323	89436
A20345	85345	
A-20345	85345	
A20886	85030	89440
A-20886	85030	89440
A20887	85005	89430
A-20887	85005	89430
A20889	85323	89436
A-20889	85323	89436
A21292	85052	
A-21292	85052	
A2160	85014	
A-2160	85014	
A2212	85029	
A-2212	85029	
A2213	85010	
A-2213	85010	
A2218	85030	89440
A-2218	85030	89440
A2230	85005	89430
A-2230	85005	89430
A2232	85005	89430
A-2232	85005	89430
A2240	85013	89414
A-2240	85013	89414
A22401	85043	
A-2240-1	85043	
A2471	85006	
A-2471	85006	
A4084	85005	89430
A-4084	85005	89430
A4089	83209	89414
A-4089	83209	89414
A4890	85712	
A-4890	85712	
A6156	85301	
A-6156	85301	
B20345	85345	
B-20345	85345	
B21553	85738	
B-21553	85738	
B21699	87018	
B-21699	87018	
B21832	85323	89436
B-21832	85323	89436
B21936	85064	
B-21936	85064	
B21947	85052	
B-21947	85052	
B21994	85938	
B-21994	85938	
B21995	85344	
B-21995	85344	
B22311	85045	
B-22311	85045	
B22312	85939	
B-22312	85939	
B22345	85911	
B-22345	85911	
B22715	85000	89436
B-22715	85000	89436
B22862	85045	
B-22862	85045	
B23013	85000	89436
B-23013	85000	89436
B23014	85738	
B-23014	85738	
B23290	83150	
B-23290	83150	
B23315	85029	
B-23315	85029	
B23316	85382	
B-23316	85382	
B23361	85911	
B-23361	85911	
B23362	89437	
B-23362	89437	
B23548	85079	
B-23548	85079	
B23566	85000	89436
B-23566	85000	89436
B23649	85064	
B-23649	85064	
B23650	85052	
B-23650	85052	
B23651	85045	
B-23651	85045	
B23743	85938	
B-23743	85938	
B23744	85344	
B-23744	85344	
B24023	85738	
B-24023	85738	
B24088	83389	89436
B24088	85000	89436
B-24088	83389	89436
B-24088	85000	89436
B24125	85323	89436
B-24125	85323	89436
B24579	85939	
B-24579	85939	
B25174	85029	
B-25174	85029	
B25436	85916	89430
B-25436	85916	89430
B25437	85337	
B-25437	85337	
B25515	85338	
B-25515	85338	
B26652	85000	89436
B-26652	85000	89436
B27058	83128	89436
B-27058	83128	89436
B27747	85911	
B-27747	85911	
B29432	85323	89436
B-29432	85323	89436
B29678	85911	
B-29678	85911	
B29826	85338	
B-29826	85338	
B33312	85338	
B-33312	85338	
B33313	85338	
B-33313	85338	
B-33314	85939	
B-33314L	85939	
NS500699	85005	89430

COMPETITIVE & O.E.M. INTERCHANGE LIST

Lista de Intercambios contra Competidores y Equipo Original.

Liste d'interchange de produits compétitifs & d'équipement original (OEM)

S10348	85043	
S-10348	85043	
S14583	85000	89436
S-14583	85000	89436
S1667	85000	89436
S-1667	85000	89436
S1668	85000	89436
S-1668	85000	89436
S20001	83389	89436
S-20001	83389	89436
S20002	85000	89436
S-20002	85000	89436
S20126	85323	89436
S-20126	85323	89436
S20345	85345	
S-20345	85345	
S20886	85030	89440
S-20886	85030	89440
S20887	85005	89430
S-20887	85005	89430
S20889	85323	89436
S-20889	85323	89436
S21292	85052	
S-21292	85052	
S21553	85738	
S-21553	85738	
S2160	85014	
S-2160	85014	
S21699	87018	
S-21699	87018	
S21832	85323	89436
S-21832	85323	89436
S21936	85064	
S-21936	85064	
S21947	85052	
S-21947	85052	
S2212	85029	
S-2212	85029	
S2213	85010	
S-2213	85010	
S2218	85030	89440
S-2218	85030	89440
S2230	85005	89430
S-2230	85005	89430
S22311	85045	
S-22311	85045	
S22312	85939	

S-22312	85939	
S2232	85005	89430
S-2232	85005	89430
S22345	85911	
S-22345	85911	
S2240	85013	89414
S-2240	85013	89414
S22715	85000	89436
S-22715	85000	89436
S22862	85045	
S-22862	85045	
S23013	85000	89436
S-23013	85000	89436
S23014	85738	
S-23014	85738	
S23290	83150	
S-23290	83150	
S23315	85029	
S-23315	85029	
S23316	85382	
S-23316	85382	
S23361	85911	
S-23361	85911	
S23362	89437	
S-23362	89437	
S23548	85079	
S-23548	85079	
S23566	85000	89436
S-23566	85000	89436
S23649	85064	
S-23649	85064	
S23650	85052	
S-23650	85052	
S23651	85045	
S-23651	85045	
S23743	85938	
S-23743	85938	
S23744	85344	
S-23744	85344	
S24023	85738	
S-24023	85738	
S24088	83389	89436
S24088	85000	89436
S-24088	83389	89436

S-24088	85000	89436
S24125	85323	89436
S-24125	85323	89436
S24579	85939	
S-24579	85939	
S2471	85006	
S-2471	85006	
S25436	85916	89430
S-25436	85916	89430
S25437	85337	
S-25437	85337	
S25515	85338	
S-25515	85338	
S26652	85000	89436
S-26652	85000	89436
S29432	85323	89436
S-29432	85323	89436
S29678	85911	
S-29678	85911	
S29826	85338	
S-29826	85338	
S33312	85338	
S-33312	85338	
S33313	85338	
S-33313	85338	
S33313L	85338	
S-33313L	85338	
S4084	85005	89430
S-4084	85005	89430
S4089	83209	89414
S-4089	83209	89414
S4890	85712	
S-4890	85712	

HENDRICKSON TRUCK SUSPENSION SYSTEMS		
O.E.M #	Gabriel	Upgrade
060665014	85962	
060665-014	85962	
060665-018	85961	
12738	83225	
471700000456	85959	
471700006269	85932	89453
471700131545	85006	
4790211	83207	89407
47902-11	83207	89407

COMPETITIVE & O.E.M. INTERCHANGE LIST

Lista de Intercambios contra Competidores y Equipo Original.

Liste d'interchange de produits compétitifs & d'équipement original (OEM)

4790213	83122	89406
47902-13	83122	89406
4790215	83137	
47902-15	83137	
4790218	85030	89440
47902-18	85030	89440
4790219	83123	89405
47902-19	83123	89405
4790220	85036	89405
47902-20	85036	89405
4790221	85976	
47902-21	85976	
4790222	85916	89430
47902-22	85916	89430
4790224	83137	
47902-24	83137	
4790225	83125	
47902-25	83125	
4790226	83144	
47902-26	83144	
4790227	83123	89405
47902-27	83123	89405
4790228	85013	89414
47902-28	85013	89414
4790229	83149	
47902-29	83149	
479023	85005	89430
47902-3	85005	89430
479028	83122	89406
47902-8	83122	89406
479029	83123	89405
47902-9	83123	89405
503610C2	83207	89407
5554596	85303	89422
57241001	83111	
57241-001	83111	
57241002	83109	
57241-002	83109	
57241003	83112	
57241-003	83112	
57241004	83110	
57241-004	83110	
57241006	83111	
57241-006	83111	
57241006L	83111	
57241-006L	83111	

573241	85036	89405
57324-1	85036	89405
5732411	85305	
57324-11	85305	
573242	85976	
57324-2	85976	
573243	85916	89430
57324-3	85916	89430
573246	85043	
57324-6	85043	
579051	85976	
57905-1	85976	
586231	85978	
58623-1	85978	
58913003	85932	89453
58913-003	85932	89453
58913003L	85932	89453
58913-003L	85932	89453
58913007	85959	
58913-007	85959	
58913007L	85959	
58913-007L	85959	
58913008	85959	
58913-008	85959	
58913008L	85959	
58913-008L	85959	
58913009	85959	
58913-009	85959	
58913009L	85959	
58913-009L	85959	
58913011	85959	
58913-011	85959	
58913011L	85959	
58913-011L	85959	
58913012	85932	89453
58913-012	85932	89453
58913012L	85932	89453
58913-012L	85932	89453
58913015	85200	
58913-015	85200	
59048001	83148	
59048-001	83148	
59057001	83137	

59057-001	83137	
59057002	85036	89405
59057-002	85036	89405
593051	85979	
59305-1	85979	
59483000	85919	
59483-000	85919	
598511	85976	
59851-1	85976	
598521	85977	
59852-1	85977	
598522	85977	
59852-2	85977	
60657003	85072	
60657-003	85072	
60657003L	85072	
60657-003L	85072	
60657005	85087	
60657-005	85087	
60657005L	85087	
60657-005L	85087	
60657006	85102	
60657-006	85102	
60657007	85072	
60657-007	85072	
60657010	85102	
60657-010	85102	
60657011	85102	
60657-011	85102	
60665003	83137	
60665-003	83137	
60665004	85036	89405
60665-004	85036	89405
60665004L	85036	89405
60665-004L	85036	89405
60665005	85919	
60665-005	85919	
60665005L	85919	
60665-005L	85919	
60665008	85978	
60665-008	85978	
60665009	85043	

COMPETITIVE & O.E.M. INTERCHANGE LIST

Lista de Intercambios contra Competidores y Equipo Original.

Liste d'interchange de produits compétitifs & d'équipement original (OEM)

60665-009	85043	
60665011	85967	
60665-011	85967	
60665013	85965	
60665-013	85965	
60665014	85962	
60665-014	85962	
60665018	85961	
60665-018	85961	
60665018L	85961	
60665-018L	85961	
60665020	85919	
60665-020	85919	
60665025	85036	89405
60665-025	85036	89405
60665025L	85036	89405
60665-025L	85036	89405
60670001	83123	89405
60670-001	83123	89405
60670002	83207	89407
60670-002	83207	89407
60670002L	83207	89407
60670-002L	83207	89407
60670003	83149	
60670-003	83149	
60670004	83123	89405
60670-004	83123	89405
60670005	83137	
60670-005	83137	
60670006	83147	
60670-006	83147	
60670006L	83147	
60670-006L	83147	
60670007	83144	
60670-007	83144	
60670007L	83144	
60670-007L	83144	
60670008	83123	89405
60670-008	83123	89405
60670008L	83123	89405
60670-008L	83123	89405
60670009	85013	89414
60670-009	85013	89414
60670010	83149	
60670-010	83149	

60670011	83148	
60670-011	83148	
60670012	83168	
60670-012	83168	
60670013	83148	
60670-013	83148	
60670014	83166	
60670-014	83166	
60670017	83148	
60670-017	83148	
60670018	83166	
60670-018	83166	
60670019	83166	
60670-019	83166	
60670020	83148	
60670-020	83148	
6067012	83168	
60670-12	83168	
60675001	85978	
60675-001	85978	
60675001L	85978	
60675-001L	85978	
60675002	85979	
60675-002	85979	
60675002L	85979	
60675-002L	85979	
60675003	85976	
60675-003	85976	
60675003L	85976	
60675-003L	85976	
60675006	85909	
60675-006	85909	
60675006L	85909	
60675-006L	85909	
60675007	83122	89406
60675-007	83122	89406
60675009	85978	
60675-009	85978	
60675010	85036	89405
60675-010	85036	89405
60675013	83123	89405
60675-013	83123	89405

60675014	85978	
60675-014	85978	
60675017	85979	
60675-017	85979	
6067512	85638	
60675-12	85638	
606758Q	85976	
60680001	83111	
60680-001	83111	
60680001L	83111	
60680-001L	83111	
60680002	83109	
60680-002	83109	
60680003	83112	
60680-003	83112	
60680003L	83112	
60680-003L	83112	
60680004	83143	
60680-004	83143	
60680004L	83143	
60680-004L	83143	
60680005	83142	
60680-005	83142	
60680005L	83142	
60680-005L	83142	
60685001	85977	
60685-001	85977	
60998001	85006	
60998-001	85006	
60998002	85919	
60998-002	85919	
60998002L	85919	
60998-002L	85919	
60998003	85006	
60998-003	85006	
64838001	85933	89454
64838-001	85933	89454
64838001L	85933	89454
64838-001L	85933	89454
64838002	85933	89454
64838-002	85933	89454
64838002L	85933	89454

COMPETITIVE & O.E.M. INTERCHANGE LIST

Lista de Intercambios contra Competidores y Equipo Original.

Liste d'interchange de produits compétitifs & d'équipement original (OEM)

64838-002L	85933	89454
64838003	85933	89454
64838-003	85933	89454
64838003L	85933	89454
64838-003L	85933	89454
654890	83207	89407
654891	83149	
654894	83123	89405
654895	83137	
654896	83147	
654897	83144	
654898	83123	89405
654899	85013	89414
654900	83149	
654903	83111	
654904	83109	
654905	83112	
659000	83148	
659004	83123	89405
659048	83143	
659049	83142	
659155	83147	
659202	83148	
659292	83148	
65992001	85955	
65992-001	85955	
65992002	85955	
65992-002	85955	
65992002L	85955	
65992-002L	85955	
65992003	85959	
65992-003	85959	
65992006	85986	
65992-006	85986	
665816	85072	
665892	85072	
671006	85036	89405
671007	83137	
671009	85919	
671105	85072	
671603	85919	
671606	85955	
671611	85955	
671704	85043	
671764	85967	
671792	85965	
671798	85962	
680091	85303	89422
680600	85305	
70018	85303	89422
70021	85303	89422
70088	85307	
98583005	83168	
98583-005	83168	
98583006	83148	
98583-006	83148	
98583016	83147	
98583-016	83147	
98583032	85072	
98583-032	85072	
A-14496	646155	
AE761643	85307	
AE76164-3	85307	
AE761644	83225	
AE76164-4	83225	
BE761642	85303	89422
BE76164-2	85303	89422
BE761643	85307	
BE76164-3	85307	
BE761644	83225	
BE76164-4	83225	

HIGHWAY PRODUCT		
O.E.M #	Gabriel	Upgrade
A16134	83207	89407
A1-6-134	83207	89407
A16135	83203	89436
A1-6-135	83203	89436

HINO		
O.E.M #	Gabriel	Upgrade
34802	83216	
485001120	85308	89422
48500-1120	85308	89422
485001140	85308	89422
48500-1140	85308	89422
485001340	85308	89422
48500-1340	85308	89422
485001610	85308	89422
48500-1610	85308	89422
485001700	85308	89422
48500-1700	85308	89422
485001730	85308	89422
48500-1730	85308	89422
485001800	83216	
48500-1800	83216	
48500-1801	83216	
485001940	83141	
48500-1940	83141	
485001941	83141	
48500-1941	83141	
48500-1950	G63610	
485002240	85308	89422
48500-2240	85308	89422
485002280	85308	89422
48500-2280	85308	89422
485002292	85308	89422
48500-2292	85308	89422
48500-2750	G63610	
48500-3710	83126	89430
485003710A	83126	89430
485003720	83140	
48500-3720	83140	
48500E0420	83391	
48500-E0420	83391	
4851137320	83518	
48511-37320	83518	
4851180162	83518	
48511-80162	83518	
485301190	85308	89422
48530-1190	85308	89422
485301460	83215	
48530-1460	83215	
485301531	85308	89422
48530-1531	85308	89422
485301770	83215	
48530-1770	83215	
485301800	85308	89422
48530-1800	85308	89422
485301812	85308	89422
48530-1812	85308	89422
485301880	83215	
48530-1880	83215	
48530-1910	83216	
485302000	85308	89422

COMPETITIVE & O.E.M. INTERCHANGE LIST
Lista de Intercambios contra Competidores y Equipo Original.
Liste d'interchange de produits compétitifs & d'équipement original (OEM)

48530-2000	85308	89422
48530-2510	83216	
48530E0100	83166	
48530-E0100	83166	
48530E0250	83137	
48530-E0250	83137	
48530E0290	83166	
48530-E0290	83166	
48530E0390	83166	
48530-E0390	83166	
4853137351	83519	
48531-37351	83519	
4853137361	83519	
48531-37361	83519	
4853137362	83519	
48531-37362	83519	
6031770800	85308	89422
6-031-7708-00	85308	89422
6031770801	85308	89422
6-031-7708-01	85308	89422
6031770802	85308	89422
6-031-7708-02	85308	89422
6031770803	85308	89422
6-031-7708-03	85308	89422
60670012	83168	
60670-012	83168	
60670013	83148	
60670-013	83148	
60670014	83166	
60670-014	83166	
60670018	83166	
60670-018	83166	
60670018L	83166	
60670-018L	83166	
60670019	83166	
60670-019	83166	
60670020	83148	
60670-020	83148	
6071480080	85308	89422
6-071-4800-80	85308	89422
6071480081	85308	89422
6-071-4800-81	85308	89422
66639	G63610	
S485001941	83141	
S4850-01941	83141	
S4850-01950	G63610	
S4850-02750	G63610	
S4850-03710	83126	89430
S485003720	83140	
S4850-03720	83140	
S4853-01910	83216	
S4853-02510	83216	

HOBBS TRAILER		
O.E.M #	Gabriel	Upgrade
680117	85300	89419

HOLIDAY RAMBLER		
O.E.M #	Gabriel	Upgrade
01809923	85029	
01809924	83144	
01809925	85010	
1C34-18045-AA	83209	89414
1C34-18045-JA	83209	89414
24153249	85125	
24-153249	85125	
24153256	85124	
24-153256	85124	
24186629	85125	
24-186629	85125	
90044794	83127	
9U94-18045-AA	83209	89414
9U9418080AA	83122	89406
9U94-18080-AA	83122	89406
9U9Z-18124-A	83209	89414
9U9Z18125A	83122	89406
9U9Z-18125-A	83122	89406
ASH-1022	83209	89414
ASH1023	83122	89406
ASH-1023	83122	89406
ASH-1136	G63623	
ASH-1154	G63622	
ASH-1205	83209	89414
ASH1206	83122	89406
ASH-1206	83122	89406
ASH-1228	83209	89414
ASH-1229	83209	89414
ASH1230	83122	89406
ASH-1230	83122	89406
ASH137	83122	89406
ASH-137	83122	89406
ASH-25822	83209	89414
ASH-25823	83209	89414
ASH25824	83122	89406
ASH-25824	83122	89406
ASH-294	83209	89414
AT-620	83209	89414
AT621	83122	89406
AT-621	83122	89406
AT-766	83209	89414
F4BE5A832MO	85125	
F4-BE5-A832-MO	85125	
F4BE5B492HO	85125	
F4-BE5-B492-HO	85125	
F4BE5F324HO	85125	
F4-BE5-F324-HO	85125	
F4BE5F325HO	85124	
F4-BE5-F325-HO	85124	
U0109007	G63183	
U0109-007	G63183	
W0005662	85125	
W0005663	85124	
W0006254	85125	

HOLLAND - BINKLEY		
O.E.M #	Gabriel	Upgrade
680298	85321	
6898	83125	

HUTCHENS SUSPENSION		
O.E.M #	Gabriel	Upgrade
942300	83203	89436
9423-00	83203	89436

IC CORPORATION		
O.E.M #	Gabriel	Upgrade
1660846C92	83101	
1675455C1	85003	89411
2018987C1	85003	89411
2200327C1	85332	
3533356C3	83169	
3578105C1	83163	
3578105C2	83163	
3578858C2	85926	
3601600C3	85082	
3604282C1	85351	

COMPETITIVE & O.E.M. INTERCHANGE LIST

Lista de Intercambios contra Competidores y Equipo Original.

Liste d'interchange de produits compétitifs & d'équipement original (OEM)

3605735C1	83169	
3605735C2	83169	
3609400C1	83317	
3609400C2	83317	
3838241C1	85986	
3902993C1	83135	
3902993C2	83135	
3902993C3	83135	
472412C91	83456	89447
501553C91	85003	89411
501906C91	83317	
501906C92	83317	
537524C91	83123	89405
6127088C1	83163	
6127713C1	85926	
65992006	85986	
65992-006	85986	
H65992006	85986	
H65992-006	85986	
OE13402S	83163	
OE13424S	83317	

INGERSOLL AXLES		
O.E.M #	Gabriel	Upgrade
65351101	85323	89436
653511-01	85323	89436
65351102	85938	
653511-02	85938	
65351103	85045	
653511-03	85045	
65351104	85052	
653511-04	85052	
665472	665472	
665904	665472	

INTERNATIONAL		
O.E.M #	Gabriel	Upgrade
12010012	83023	
1201-0012	83023	
12010154	83051	
1201-0154	83051	
12010254	83051	
1201-0254	83051	

12011043	83025	
1201-1043	83025	
12011044	83025	
1201-1044	83025	
12011049	83025	
1201-1049	83025	
12011212	83013	
1201-1212	83013	
12011213	83005	
1201-1213	83005	
12019007	83054	
1201-9007	83054	
12019008	83054	
1201-9008	83054	
12019009	83054	
1201-9009	83054	
12019010	83053	
1201-9010	83053	
12019011	83053	
1201-9011	83053	
12019013	83062	
1201-9013	83062	
12019014	83062	
1201-9014	83062	
12019018	83062	
1201-9018	83062	
12019021	83062	
1201-9021	83062	
12020012	83023	
1202-0012	83023	
12020032	83016	
1202-0032	83016	
12020042	83025	
1202-0042	83025	
12020043	83025	
1202-0043	83025	
12020044	83025	
1202-0044	83025	
12020054	83021	
1202-0054	83021	

12021043	83025	
1202-1043	83025	
12021044	83025	
1202-1044	83025	
12021212	83013	
1202-1212	83013	
12021213	83005	
1202-1213	83005	
1660846C91	83101	
1660846C92	83101	
1663471C1	83103	
1663606C91	85027	
1664149C1	85029	
1664524C1	85935	
1664788C2	85316	89426
1667520C1	85058	89431
1675455C1	85003	89411
1677707C1	85030	89440
1690035C1	85003	89411
2012768C1	83013	
2012769C1	83005	
2012769C2	83005	
2015556C1	85316	89426
2015557C1	85030	89440
2018987C1	85003	89411
2018987C2	85003	89411
2023684C1	83015	
2023685C1	83015	
2025790C1	83013	
2029200C91	83126	89430
2029200C91	85030	89440
2032533C1	85316	89426
2039549C1	85333	
204994R91	83225	
206620R91	83216	
206621R91	83216	
206621R92	83216	
208664C91	85307	
210533R91	83225	
210534R92	83225	
210535R91	83225	
210536R91	83225	
210537R91	83225	

COMPETITIVE & O.E.M. INTERCHANGE LIST
Lista de Intercambios contra Competidores y Equipo Original.
Liste d'interchange de produits compétitifs & d'équipement original (OEM)

210538R91	83225	
210918R91	83215	
210919R91	85307	
210920R91	85308	89422
2200327C1	85332	
2500013C1	83013	
2503529C1	83025	
2507948C1	83054	
2508326C1	83021	
2508327C1	83025	
2509221C91	83054	
2509222C91	83053	
2509223C91	83054	
2509224C91	83053	
2585145C1	83051	
2589922C1	83051	
2590915C1	83062	
2590916C1	83062	
2593803C91	83062	
2595314C1	83062	
2597458C91	83062	
2600491C91	83062	
2601488C91	83062	
2602021C1	83062	
288920C91	83225	
288921C91	83225	
288921R92	83225	
293009C91	85308	89422
294334C91	83216	
3000070C91	83456	89447
3000098C1	83317	
306444C91	85012	89413
3085640C92	83216	
308646C91	85012	89413
308648C91	83225	
308649C91	83216	
308650C91	83216	
308650C92	83216	
308664C91	85307	
308668C91	85012	89413
308668C92	85012	89413
308669C91	85012	89413
320444C91	85012	89413

329316C92	85012	89413
350425C1	85300	89419
350426C1	85734	
350426C91	85734	
3514952C1	85976	
3515265C1	83112	
3515265C2	83112	
3533356C1	83135	
3533356C2	83135	
3533356C3	83169	
3533357C1	85957	
3533357C2	85957	
3533357C3	85957	
3541456C1	85929	
3544768C1	85926	
3544768C2	85926	
3549099C1	85923	89458
3549099C2	85923	89458
3549099C3	85923	89458
3549100C1	85926	
3553628C1	85927	
3553628C2	85927	
3553628C3	85927	
3553628C4	85927	
3557165C1	83053	
3557167C3	83053	
3558089C1	85925	
3558089C2	85925	
3558089C3	85925	
3558989C1	85925	
3558989C2	85925	
3560705C2	83054	
3571711C1	85316	89426
3571713C1	85333	
3573265C1	85931	89458
3576464C1	85957	
3576464C2	85957	
3576465C1	85929	
3576465C2	85929	
3578105C1	83163	
3578105C2	83163	
3578858C1	85926	

3578858C2	85926	
3581106C1	85924	89457
3581106C2	85924	89457
3581106C3	85924	89457
3581107C1	85924	89457
3581107C2	85924	89457
3581107C3	85924	89457
3581109C1	85924	89457
3581109C3	85924	89457
3581109C4	85924	89457
3584116C1	83175	
3584116C2	83175	
3584117C1	83135	
3584117C2	83135	
3584118C1	85928	
3584118C2	85928	
3584535C1	85924	89457
3584535C2	85924	89457
3584535C3	85924	89457
3586883C1	85931	89458
3586902C2	83364	
3586902C3	83364	
3588209C1	85957	
3588209C2	85957	
3596107C1	85927	
3596107C2	85927	
3596107C3	85927	
3596107C4	85927	
3596878C2	85648	
3601600C1	85082	
3601600C2	85082	
3601600C3	85082	
3604282C1	85351	
360444C91	85012	89413
3606770C1	83163	
3606770C2	83163	
3606857C1	85954	
3606857C2	85954	
3606857C3	85994	
3606859C1	85954	
3606859C2	85954	
3606859C3	85994	
3609178C1	85955	
3609400C1	83317	

COMPETITIVE & O.E.M. INTERCHANGE LIST

Lista de Intercambios contra Competidores y Equipo Original.

Liste d'interchange de produits compétitifs & d'équipement original (OEM)

3609400C2	83317	
3610198C1	85963	
3610199C1	85964	
3613984C1	85955	
3620395C1	85931	89458
3626571C1	85072	
3660548C1	85955	
3660549C1	85955	
3668566C1	85954	
3670156C1	85954	
3674348C1	85954	
3684524C1	85102	
3688614C1	85923	89458
3688615C1	85931	89458
3688616C1	85923	89458
3688729C1	85931	89458
3688732C1	85931	89458
3737574C1	85954	
3737575C1	85954	
3737576C1	85931	89458
3806341C3	85995	
3806341C4	85995	
3810581C3	85995	
3810581C4	85995	
3812837C1	85954	
3813340C1	85964	
3813340C2	85964	
3813340C3	85964	
3813340C4	85964	
3813341C1	85963	
3813341C2	85963	
3813341C3	85963	
3813341C4	85963	
3816234C1	85929	
3821760C1	85931	89458
383379C91	83308	
3838241C1	85986	
384435C91	83216	
3868264C1	85998	
3868265C1	85995	
3868265C1	85998	
3885832C1	83135	
3885832C2	83135	
3892445C3	85931	89458
3892458C1	85926	
3892458C2	85926	
3902993C1	83135	
3902993C3	83135	
3945165C1	83180	
3977759C2	85639	
3983162C1	85639	
3983162C2	85639	
3989717C1	83135	
3991991C1	83135	
4050340C1	85931	89458
4050340C2	85931	89458
4050443C1	85994	
4050443C2	85994	
4050444C1	85994	
4050444C2	85994	
4055574C2	83907	
4060267C4	83909	
4069426C1	85642	
4069434C1	85642	
4069435C1	85642	
4070336C1	85058	89431
4070352C1	85648	
4072186C1	85928	
4089293C1	83397	
4109458C2	83243	
4109582C1	83397	
4164146C1	83169	
4164148C1	85003	89411
4164149C1	85923	
4164152C1	85924	89457
4164155C1	85058	89431
4164156C1	85924	89457
4164161C1	85929	
4205983C1	83397	
4206863C1	83398	
4207304C1	83397	
4208946C1	83398	
4211080C1	85957	
4212927C1	85929	
4212932C1	85931	
4212942C1	85639	
4213758C1	85639	
4213760C1	83163	
4214011C2	85670	
426744R91	85303	89422
426744R92	85303	89422
44651211	85739	
446-51-211	85739	
452566C91	83225	
453527C91	85311	89424
453528C91	85311	89424
453556C91	85012	89413
453561C91	83225	
453562C91	83225	
453564C91	85012	89413
453565C91	83225	
453566C91	83225	
453567C91	83216	
453568C91	83225	
453569C91	83225	
453570C91	83216	
453571C91	83216	
453572C91	83309	
453574C91	85307	
453575C91	83308	
453576C91	85303	89422
453576C92	85303	89422
453577C91	85308	89422
453579C91	85308	89422
462557C91	85300	89419
462603C91	85705	89447
462753C91	83216	
463926C91	85705	89447
467371C91	83225	
467372C91	83225	
467983C91	85012	89413
467984C91	83216	
467985C91	85012	89413
471201C91	85012	89413
471203C91	83308	
472367C91	83318	
472411C91	83456	89447
472412C91	83456	89447
472414C91	83318	

COMPETITIVE & O.E.M. INTERCHANGE LIST

Lista de Intercambios contra Competidores y Equipo Original.

Liste d'interchange de produits compétitifs & d'équipement original (OEM)

474002C91	83308	
477132C1	85303	89422
4790224	83137	
47902-24	83137	
4C4Z18124N	85957	
4C4Z-18124-N	85957	
4C4Z18125DA	85926	
4C4Z-18125-DA	85926	
501506C91	83317	
501553C91	85003	89411
501905C91	83301	
501906C91	83317	
501906C92	83317	
503550C1	83207	89407
503610C1	83207	89407
503610C2	83207	89407
507202C1	85030	89440
534464C1	85734	
537524C91	83123	89405
537525C91	83123	89405
540395C91	83613	
540395C92	83613	
548532C1	83103	
56101 Z1030	85311	89424
56101 Z2000	85311	89424
56101 Z5008	83114	
56101 Z5011	G63610	
56110T8123	G63432	
56110-T8123	G63432	
56110T8129	G63432	
56110-T8129	G63432	
57905001	85976	
57905-001	85976	
586724C91	83456	89447
596329C1	85014	
60657003	85072	
60657-003	85072	
60657003L	85072	
60657-003L	85072	
60657006	85102	
60657-006	85102	
60657010	85102	
60657-010	85102	

60657011	85102	
60657-011	85102	
60665013	85965	
60665-013	85965	
60670007	83144	
60670-007	83144	
60670007L	83144	
60670-007L	83144	
60675003	85976	
60675-003	85976	
60675003L	85976	
60675-003L	85976	
60680003	83112	
60680-003	83112	
60680003L	83112	
60680-003L	83112	
60680004	83143	
60680-004	83143	
60680004L	83143	
60680-004L	83143	
60680005	83142	
60680-005	83142	
60680005L	83142	
60680-005L	83142	
6127086C1	85637	
6127087C1	83364	
6127088C1	83163	
6127096C1	83180	
6127666C1	85642	
6127688C1	83169	
6127690C1	85923	89458
6127700C1	83395	
6127704C1	85670	
6127705C1	85924	89457
6127713C1	85926	
6127713C2	85656	
6127714C1	85928	
65992001	85955	
65992-001	85955	
65992002	85955	
65992-002	85955	

65992002L	85955	
65992-002L	85955	
65992006	85986	
65992-006	85986	
66400	G63432	
6ETZ18125A	83364	
6ETZ-18125-A	83364	
70334	85316	89426
790335C91	83209	89414
800670	85060	
873619C92	83314	
873619C93	83314	
873622C91	83308	
874695R91	85012	89413
874695R92	85012	89413
874696R91	85012	89413
90044025	83209	89414
90044626	83126	89430
AMS600102	85005	89430
AMS600172	83126	89430
AMS600172	85030	89440
AMS650102	85001	89410
AMS650107	85316	89426
AMS650400	85033	89427
AMS650402	85311	89424
AMS650404	85310	89423
AMS650405	85023	89415
AMS650406	85024	
AMS650408	85319	89428
AMS650420	85013	89414
AMS66161	83053	
H60657003	85072	
H60657-003	85072	
H60657006	85102	
H60657-006	85102	
H60657010	85102	
H60657-010	85102	
H60657011	85102	
H60657-011	85102	
H60665013	85965	
H60675003	85976	
H60675-003	85976	
H60680003	83112	
H60680-003	83112	
H60680004	83143	

COMPETITIVE & O.E.M. INTERCHANGE LIST

Lista de Intercambios contra Competidores y Equipo Original.

Liste d'interchange de produits compétitifs & d'équipement original (OEM)

H65992006	85986	
H65992-006	85986	
HDR60680005	83142	
HDR60680-005	83142	
OE 18513	83135	
OE13402S	83163	
OE13424S	83317	
OE14771	83062	
OE17103	83135	

ISUZU		
O.E.M #	Gabriel	Upgrade
12474915	83122	89406
15123676	83136	
1516301600	83162	
1-51630-160-0	83162	
1516301670	83613	
1-51630-167-0	83613	
1516301681	83515	
1-51630-168-1	83515	
1-51630-217-0	83114	
1-51630-217-1	83114	
1-51630-219-0	83114	
1-51630-219-1	83114	
15174902	85071	
15887728	83136	
19152843	83136	
51630168	83515	
51630217	83114	
51630219	83114	
51630647	83515	
51630666	85012	89413
60670005	83137	
60670-005	83137	
60670005L	83137	
60670-005L	83137	
8220642320	85071	
8-22064232-0	85071	
8220642330	83136	
8-22064233-0	83136	
8-22064-233-0	83136	

8220648040	83136	
8-22064804-0	83136	
8-22064-804-0	83136	
8220648050	83136	
8-22064805-0	83136	
8-22064-805-0	83136	
8220648060	83136	
8-22064-806-0	83136	
8220648070	83136	
8-22064-807-0	83136	
88982682	83136	
88982686	85071	
8-94454-647-1	83515	
8-94454-986-0	83515	
8944549870	83515	
8-94454-987-0	83515	
8970830270	83515	
8-97083-027-0	83515	
8970830290	83515	
8-97083-029-0	83515	
8972019600	83515	
8972536160	83515	
8-97253-616-0	83515	
8972536200	83515	
8-97253-620-0	83515	
8972536201	83515	
8-97253-620-1	83515	
8972536210	83515	
8-97253-621-0	83515	
8972536230	83515	
8-97253-623-0	83515	
8-97253-651-2	83159	
8-97253-664-0	83159	
8-97253-665-0	83159	
8975179660	83137	
8-97517-966-0	83137	
8975179661	83137	
8-97517-966-1	83137	
8-98098-058-0	83159	
898098-0581	83159	

8-98098-058-1	83159	
8980980590	83159	
8-98098-059-0	83159	
8980980591	83159	
8-98098-059-1	83159	
8980981250	83515	
898098-1250	83515	
8-98098-125-0	83515	
8980981270	83515	
898098-1270	83515	
8-98098-127-0	83515	
8982326710	83515	
8-98232671-0	83515	
8982326711	83515	
8-98232671-1	83515	
8982326720	83515	
8-98232672-0	83515	
8982326721	83515	
8-98232672-1	83515	
8-98316227-0	83159	
8983162280	83159	
8-98316-228-0	83159	
8983219121	85071	
8-98321-912-1	85071	
8-98343986-0	83159	
8983807460	83159	
8-98380-746-0	83159	
8983807470	83159	
8-98380-747-0	83159	
8983810100	83515	
8-98381-010-0	83515	
8983810120	83515	
8-98381-012-0	83515	
94454986	83515	
94454987	83515	
9-51630-647-1	83515	
9516306660	85012	89413
9-51630-666-0	85012	89413
9516306662	85012	89413
9-51630-666-2	85012	89413
97083027	83515	

COMPETITIVE & O.E.M. INTERCHANGE LIST

Lista de Intercambios contra Competidores y Equipo Original.

Liste d'interchange de produits compétitifs & d'équipement original (OEM)

97083029	83515	
97253620	83515	
97253651	83159	
97253664	83159	
97253665	83159	
98098058	83159	
98098059	83159	
98098125	83515	
98098127	83515	
98232671	83515	
98232672	83515	
98316227	83159	
98343986	83159	

ITASCA		
O.E.M #	Gabriel	Upgrade
141700131809	85029	
141700131810	83160	
1616736000	85029	
16-16736-000	85029	
1616737000	83160	
16-16737-000	83160	
1616873000	85029	
16-16873-000	85029	
1616874000	83160	
16-16874-000	83160	
1618103000	85900	
16-18103-000	85900	
1C34-18045-AA	83209	89414
1C34-18045-JA	83209	89414
24153249	85125	
24-153249	85125	
24153256	85124	
24-153256	85124	
24186629	85125	
24-186629	85125	
481700000493	85900	
66153002	83124	89407
66153-002	83124	89407
8C24-18045-DA	G63622	
8C24-18080-DB	G63623	
8C2Z-18124-D	G63622	

8C2Z-18125-D	G63623	
9U94-18045-AA	83209	89414
9U9418080AA	83122	89406
9U94-18080-AA	83122	89406
9U9Z-18124-A	83209	89414
9U9Z18125A	83122	89406
9U9Z-18125-A	83122	89406
ASH-1022	83209	89414
ASH1023	83122	89406
ASH-1023	83122	89406
ASH-1136	G63623	
ASH-1154	G63622	
ASH-1205	83209	89414
ASH1206	83122	89406
ASH-1206	83122	89406
ASH-1228	83209	89414
ASH-1229	83209	89414
ASH1230	83122	89406
ASH-1230	83122	89406
ASH137	83122	89406
ASH-137	83122	89406
ASH-25822	83209	89414
ASH-25823	83209	89414
ASH25824	83122	89406
ASH-25824	83122	89406
ASH-294	83209	89414
AT-163G	G63622	
AT-164G	G63623	
AT-620	83209	89414
AT621	83122	89406
AT-621	83122	89406
AT-766	83209	89414
F4BE5A832MO	85125	
F4-BE5-A832-MO	85125	
F4BE5B492HO	85125	
F4-BE5-B492-HO	85125	
F4BE5C832MO	83124	89407
F4-BE5-C832-MO	83124	89407
F4BE5F324HO	85125	
F4-BE5-F324-HO	85125	
F4BE5F325HO	85124	
F4-BE5-F325-HO	85124	
W0005662	85125	
W0005663	85124	
W0006254	85125	

JAY MADSEN		
O.E.M #	Gabriel	Upgrade
3166657	85700	
3192333	85700	

JAYCO RV INC.		
O.E.M #	Gabriel	Upgrade
ASH-1136	G63623	
ASH-1154	G63622	
ASH-1229	83209	89414
ASH-25822	83209	89414
ASH-25823	83209	89414
ASH25824	83122	89406
ASH-25824	83122	89406

JIFFLOX		
O.E.M #	Gabriel	Upgrade
CP5222	85315	
CP-5222	85315	

JOHN DEERE		
O.E.M #	Gabriel	Upgrade
3638112	G63183	
4036892	G63605	

KENWORTH		
O.E.M #	Gabriel	Upgrade
02027362	85302	89420
02-02736-2	85302	89420
0202736PLUS	85302	89420
02-02736PLUS	85302	89420
0202736PLUS2	85302	89420
02-02736PLUS-2	85302	89420
02-02737-2	85062	89408
0202737PLUS	85062	89408
02-02737PLUS	85062	89408
02-02737PLUS-2	85062	89408
02-02738-2	85012	89413
0202738PLUS	85012	89413
02-02738PLUS	85012	89413
0202738PLUS2	85012	89413
02-02738PLUS-2	85012	89413
02027392	85013	89414
02-02739-2	85013	89414
0202739PLUS	85013	89414
02-02739PLUS	85013	89414
02027402	85036	89405
02-02740-2	85036	89405
02027412	85012	89413
02-02741-2	85012	89413
02-02742-2	85062	89408

COMPETITIVE & O.E.M. INTERCHANGE LIST

Lista de Intercambios contra Competidores y Equipo Original.

Liste d'interchange de produits compétitifs & d'équipement original (OEM)

02040102	85012	89413
02-04010-2	85012	89413
020739PLUS2	85013	89414
02-0739PLUS-2	85013	89414
0304176PLUS	85308	89422
03-04176PLUS	85308	89422
0306084PLUS	85033	89427
03-06084PLUS	85033	89427
0306084PLUS2	85033	89427
03-06084PLUS-2	85031	
03-06084PLUS-2	85033	89427
0307421PLUS	85311	89424
03-07421PLUS	85311	89424
03074232	85033	89427
03-07423-2	85031	
03-07423-2	85033	89427
0307423PLUS	85033	89427
03-07423PLUS	85033	89427
0307423PLUS2	85033	89427
03-07423PLUS-2	85031	
03-07423PLUS-2	85033	89427
03083502	85343	
03-08350-2	85343	
0308781	85069	89455
03-08781	85069	89455
03087812	85069	89455
03-08781-2	85069	89455
1012032002PLUS	85320	89429
10-12032-002PLUS	85320	89429
1012032002PLUS2	85320	89429
10-12032-002PLUS-2	85320	89429
1012542000PLUS	85901	
10-12542-000PLUS	85901	
11418	646177	
11418WAC	646177	
12010012	83023	
1201-0012	83023	
12011043	83025	
1201-1043	83025	
12011044	83025	
1201-1044	83025	
12011046	83049	
1201-1046	83049	
12011264	83031	
1201-1264	83031	
12018001	83908	
1201-8001	83908	

12018002	83081	
1201-8002	83081	
12020012	83023	
1202-0012	83023	
12020032	83016	
1202-0032	83016	
12020042	83025	
1202-0042	83025	
12020043	83025	
1202-0043	83025	
12020044	83025	
1202-0044	83025	
12020054	83021	
1202-0054	83021	
12021043	83025	
1202-1043	83025	
12021046	83049	
1202-1046	83049	
12021064	83024	
1202-1064	83024	
12021065	83002	
1202-1065	83002	
12021164	83031	
1202-1164	83031	
12021264	83031	
1202-1264	83031	
12021286	83056	
1202-1286	83056	
1202K046	83049	
1202K064	83024	
1202K065	83002	
1202-K065	83002	
1202K164	83031	
1202K264	83031	
1202K286	83056	
1613947000PLUS	85319	89428
16-13947-000PLUS	85319	89428
1613947000PLUS2	85319	89428
16-13947-000PLUS-2	85319	89428
1672501	83126	89430
16725-01	83126	89430
1707378PAC	85182	

1949501	83126	89430
19495-01	83126	89430
2018987C1PLUS	85003	89411
2018987C1PLUS2	85003	89411
2018987C1PLUS-2	85003	89411
2027382	85012	89413
25333002	83049	
25523002	83908	
25523013	83081	
25523024	83081	
3166657	85700	
471700004423	85109	
471700013186	85109	
4790213PLUS	83122	89406
47902-13PLUS	83122	89406
4790219	83123	89405
47902-19	83123	89405
4790224	83137	
47902-24	83137	
60657003	85072	
60657-003	85072	
60657003L	85072	
60657-003L	85072	
60665011	85967	
60665-011	85967	
60665013	85965	
60665-013	85965	
60670004	83123	89405
60670-004	83123	89405
60670005	83137	
60670-005	83137	
60670005L	83137	
60670-005L	83137	
60670005PLUS	83137	
60670-005PLUS	83137	
60670-005PLUS-2	83137	
60670008	83123	89405
60670-008	83123	89405
60670008L	83123	89405
60670-008L	83123	89405
60670008PLUS	83123	89405
60670-008PLUS	83123	89405
60670008PLUS2	83123	89405
60670-008PLUS-2	83123	89405
60675017	85979	
60675-017	85979	

COMPETITIVE & O.E.M. INTERCHANGE LIST

Lista de Intercambios contra Competidores y Equipo Original.

Liste d'interchange de produits compétitifs & d'équipement original (OEM)

60680004	83143	
60680-004	83143	
60680004L	83143	
60680-004L	83143	
60680005	83142	
60680-005	83142	
60680005L	83142	
60680-005L	83142	
64178001	83143	
64178-001	83143	
665092	83312	89409
665118	83312	89409
665174	85060	
665331	85740	
665453	85001	89410
665565	85007	
665565PLUS	85007	
665565PLUS2	85007	
665565PLUS-2	85007	
665617	85031	
6656172	85031	
665617-2	85031	
665632	85013	89414
665633	85033	89427
665670	85001	89410
665680	83312	89409
665738-2	85910	
665783	83123	89405
665784	83122	89406
665785	83137	
665788	85000	89436
665788-2	85000	89436
665828	85067	89451
665844	85069	89455
665858	85070	89459
6658582	85070	89459
665858-2	85070	89459
665903	85900	
665906	85902	
665918	85900	
665926	85047	89435
665927	85901	
665928	85062	89408
665930	85001	89410
665931	83312	89409
665932	85012	89413
665944	85900	
665944-2	85900	
665945	85902	
665945-2	85902	
665950	85902	
671052	85070	89459
6710522	85070	89459
671052-2	85070	89459
671654	85936	89456
671656	85985	
671699	85937	
671794	85067	89451
671962	85936	89456
671962PLUS	85936	89456
671962SPL	85936	89456
671963	85937	
675122	85001	89410
680237	85303	89422
680239	85310	89423
680240	85302	89420
680241	85311	89424
680242	85308	89422
680253	85314	89425
680261	85062	89408
680261-2	85062	89408
680279	83209	89414
680280	85906	89407
680281	85003	89411
680283	85740	
680303	85007	
680425	85320	89429
680435	85033	89427
680473	85319	89428
680475	85314	89425
680476	85310	89423
680486	85310	89423
680586	85311	89424
70701	85900	
70701PLUS	85900	
70701PLUS-2	85900	
800670	85060	
8086053PLUS	85047	89435
90044025PLUS	83209	89414
90044089	83124	89407
90044089PLUS	83124	89407
90044089PLUS-2	83124	89407
90045099	85906	89407
90045132	85909	
90045605	85109	
90045803	85109	
90045812	85109	
9602710545	83011	
96027-10545	83011	
ACHB966	83136	
B711000	85031	
B71-1000	85031	
B711001	85070	89459
B71-1001	85070	89459
B711002	85001	89410
B71-1002	85001	89410
B711003	83312	89409
B71-1003	83312	89409
B716000	85959	
B71-6000	85959	
B71-6000-2	85959	
B716002	85012	89413
B71-6002	85012	89413
B71-6002-2	85012	89413
B716003	85029	
B71-6003	85029	
B71-6003-2	85029	
B716004	85084	89460
B71-6004	85084	89460
B716005	85084	89460
B71-6005	85084	89460
B716006	85084	89460
B71-6006	85084	89460
B716007	85062	89408
B71-6007	85062	89408
B716008	83312	89409
B71-6008	83312	89409
B716010	85023	89415
B71-6010	85023	89415
B716011	85062	89408
B71-6011	85062	89408
B716012	85119	
B71-6012	85119	
B716013	85012	89413
B71-6013	85012	89413
B716015	85012	89413
B71-6015	85012	89413
B716016	85012	89413
B71-6016	85012	89413
B716017	85910	
B71-6017	85910	
B716018	85012	89413
B71-6018	85012	89413

COMPETITIVE & O.E.M. INTERCHANGE LIST

Lista de Intercambios contra Competidores y Equipo Original.

Liste d'interchange de produits compétitifs & d'équipement original (OEM)

B716019	85989	
B71-6019	85989	
B716020	85989	
B71-6020	85989	
BFRG 072	85182	
C711002	85067	89451
C71-1002	85067	89451
C7110022	85067	89451
C71-1002-2	85067	89451
C711002PLUS	85067	89451
C71-1002PLUS	85067	89451
C711002PLUS2	85067	89451
C71-1002PLUS-2	85067	89451
C711011	85069	89455
C71-1011	85069	89455
C711011PLUS	85069	89455
C71-1011PLUS	85069	89455
C711011PLUS2	85069	89455
C71-1011PLUS-2	85069	89455
C711011SPL	85069	89455
C71-1011SPL	85069	89455
C711013	85985	
C71-1013	85985	
C711014	85936	89456
C71-1014	85936	89456
C711015	85937	
C71-1015	85937	
C711015 PLUS	85937	
C71-1015 PLUS	85937	
C711015A	85937	
C71-1015A	85937	
C711016	85067	89451
C71-1016	85067	89451
C711017	85069	89455
C71-1017	85069	89455
C7160002	85067	89451
C71-6000-2	85067	89451
C716003	85988	
C71-6003	85988	
C716004	85343	
C71-6004	85343	
C716005	85069	89455
C71-6005	85069	89455
C716015	85067	89451
C71-6015	85067	89451
K37410	83215	
K374-10	83215	
K374102	83215	
K374-10-2	83215	
K37411	85001	89410
K374-11	85001	89410
K37413	85740	
K374-13	85740	
K374131	85740	
K374-13-1	85740	
K37414	83312	89409
K374-14	83312	89409
K37416	85001	89410
K374-16	85001	89410
K37426	85001	89410
K374-26	85001	89410
K374262	85001	89410
K374-26-2	85001	89410
K37426PLUS	85001	89410
K374-26PLUS	85001	89410
K37426PLUS2	85001	89410
K374-26PLUS-2	85001	89410
K37427	85001	89410
K374-27	85001	89410
K374272	85001	89410
K374-27-2	85001	89410
K37428	85314	89425
K374-28	85314	89425
K374282	85314	89425
K374-28-2	85314	89425
K37428PLUS	85314	89425
K374-28PLUS	85314	89425
K37429	85310	89423
K374-29	85310	89423
K374292	85310	89423
K374-29-2	85310	89423
K37429PLUS	85310	89423
K374-29PLUS	85310	89423
K37429PLUS2	85310	89423
K374-29PLUS-2	85310	89423
K3743	83312	89409
K374-3	83312	89409
K37431	83312	89409
K374-3-1	83312	89409
K37432	85310	89423
K374-32	85310	89423
K374322	85310	89423
K374-32-2	85310	89423
K37433	83312	89409
K374-33	83312	89409
K374-33-2	83312	89409
K37433PLUS	83312	89409
K374-33PLUS	83312	89409
K374-33PLUS-2	83312	89409
K37436	89432	
K374-36	89432	
K3744	85314	89425
K374-4	85314	89425
K3745	83312	89409
K374-5	83312	89409
K3747	85310	89423
K374-7	85310	89423
K3749	85310	89423
K374-9	85310	89423
K374C31	83312	89409
K374-C31	83312	89409
K374C7	85310	89423
K374-C7	85310	89423
PP1058870	83059	
PP2582870	83012	
R711004	83049	
R71-1004	83049	
R711005	83024	
R71-1005	83024	
R716000	83067	
R71-6000	83067	
R716005	83042	
R71-6005	83042	
R716007	83008	
R71-6007	83008	
R716008	83035	
R71-6008	83035	
R716009	83081	
R71-6009	83081	
R716010	83067	
R71-6010	83067	
S20126	85323	89436
S-20126	85323	89436
T711000	83031	
T71-1000	83031	
T711001	83031	
T71-1001	83031	
T711002	83002	
T71-1002	83002	
T711003	83056	
T71-1003	83056	
TK19679	83126	89430

COMPETITIVE & O.E.M. INTERCHANGE LIST

Lista de Intercambios contra Competidores y Equipo Original.

Liste d'interchange de produits compétitifs & d'équipement original (OEM)

KIMBLE MIXER CO.		
O.E.M #	Gabriel	Upgrade
OE10455	646155	
T910000200	646155	
T91-00002-00	646155	

KING OF THE ROAD		
O.E.M #	Gabriel	Upgrade
141700131809	85029	
141700131810	83160	
1616736000	85029	
16-16736-000	85029	
1616737000	83160	
16-16737-000	83160	
1616873000	85029	
16-16873-000	85029	
1616874000	83160	
16-16874-000	83160	
1618103000	85900	
16-18103-000	85900	
481700000493	85900	

KONI		
O.E.M #	Gabriel	Upgrade
30-1350	G63511	
30-1366	G63610	
30-1501	G63608	
30-1502	G63679	
30-1614	G63678	
82-1952	G63347	
82-1954	G63355	
82-1969	G63500	
82-1970	G63350	
82-2158	G63357	
82-2246	G63299	
8240-1029	G63386	
84-1168	83130	
8805-1001	85125	
8805-1002	85124	
8805-1018	83209	89414
8805-1019	83122	89406
8805-1020	83160	
8805-1022	85724	89443
8805-1023	83136	
8805-1042	G63622	
8805-1043	G63623	
88-1385	83105	
88-1417	83312	89409
88-1419	83136	
88-1422	85030	89440
88-1457-SP1	83209	89414
88-1458-SP1	83122	89406
88-1458-SP2	83122	89406
88-1468	83209	89414
88-1476	85740	
88-1489	85036	89405
88-1490	83124	89407
88-1499	85001	89410
88-1509	85027	
88-1510	85708	
88-1517	85040	
88-1518	85040	
88-1520	85040	
88-1525	85040	
88-1532	85708	
88-1540	85051	
88-1541	85045	
88-1558	85013	89414
88-1559-SP1	85036	89405
88-1560	85062	89408
88-1561	85012	89413
88-1562	85003	89411
88-1616	85014	
88-1639	83130	
88-1641	85029	
88-1642	83124	89407
88-1644	85000	89436
88-1646	83613	
88-1647	83317	
88-1704	85030	89440
88-5162	83209	89414
88-5163	83122	89406
9005-1018	85970	
9005-1019	85341	
90-1409-SP1	85722	
90-1577-SP1	85310	89423
90-1811	85301	
90-1813-SP1	85712	
90-1862	85708	
90-1867	85053	89442
90-1868	85307	
90-1868-SP1	85307	
90-1896	85302	89420
90-1897	85303	89422
90-1898	83215	
90-1907-SP1	85300	89419
90-1908-SP1	85723	
90-1909-SP1	85722	
90-1910	85704	
90-1912	85318	
90-1922	85900	
90-1943	85307	
90-1951-SP1	85734	
90-1951-SP5	85712	
90-1965	85304	
90-1968	85720	
90-1974	85311	89424
9020-1042	85708	
90-2059	85722	
90-2060	85722	
90-2102-SP1	85708	
90-2148	85304	
90-2164-SP1	85723	
90-2209	85308	89422
90-2209-SP2	85001	89410
90-2253-SP2	85732	
90-2254	85720	
90-2256	85732	
90-2257	85716	
90-2325	85340	
90-2326	85970	
90-2327	85341	
90-2396-SP1	85000	89436
90-2396-SP1	85323	89436
90-2407	85709	
90-2434	85702	
90-2477	85900	
90-2478	85902	
90-2497S-P1	85712	
90-2563	85006	

COMPETITIVE & O.E.M. INTERCHANGE LIST

Lista de Intercambios contra Competidores y Equipo Original.

Liste d'interchange de produits compétitifs & d'équipement original (OEM)

90-2572	85329	
90-2573	85329	
90-2575	85700	
90-2576	85700	
90-2586	85728	
90-2588	85339	
90-2589	85727	
90-2816	85711	
90-5055-SP2	85318	
90-5180	85300	89419
90F-1235	85700	
92-1227	85722	

KRYSTAL BUS		
O.E.M #	Gabriel	Upgrade
ASH1136	G63623	
ASH-1136	G63623	
ASH1154	G63622	
ASH-1154	G63622	

KWK - LOC (JIFFLOX)		
O.E.M #	Gabriel	Upgrade
522217	85315	
CP5222	85315	
CP-5222	85315	

KYB		
O.E.M #	Gabriel	Upgrade
340084	83515	
341302	G63678	
341613	85062	89408
341614	85001	89410
341615	83215	
341617	85005	89430
341618	85918	89449
341619	83136	
341620	85033	89427
341621	85311	89424
341622	85023	89415
341623	85003	89411
341624	85036	89405
341625	85000	89436
341626	85000	89436
341627	85006	
341628	85724	89443
341629	85938	
341630	85052	
341631	646155	
341632	83124	89407
341633	83215	
344049	G63414	
344050	G63773	
344067	G63347	
344068	G63355	
344069	G63500	
344077	G63406	
344079	G63775	
344085	G63306	
344091	G63511	
344264	G63387	
344267	G63455	
344268	G63614	
344269	G63679	
344272	G63386	
344366	G63366	
344367	G63714	
344368	G63716	
344369	G63624	
344370	G63622	
344371	G63623	
344374	G63778	
344385	G63866	
344397	G63772	
344426	G63299	
345025	83515	
345080	G63622	
345601	83613	
345602	85052	
345604	85051	
345605	85012	89413
345606	83136	
345607	83130	
345608	85060	
345609	83515	
345611	83120	
345613	85005	89430
345614	83309	
345615	83314	
345616	83125	
345617	83203	89436
345618	83126	89430
345620	83456	89447
345621	85003	89411
349119	83159	
441133	83515	
441600	85310	89423
441602	85724	89443
444058	83159	
444203	83515	
444209	83114	
444328	83159	
445016	83515	
445054	83613	
445064	83162	
446074	85308	89422
446075	83215	
447001	85308	89422
554380	83159	
KG5401	G63299	
KG5406	G63386	
KG5420	G63366	
KG5421	G63387	
KG5422	G63183	
KG5431	G63511	
KG54330	G63809	
KG54331	G63837	
KG54333	G63810	
KG5440	G63350	
KG5475	G63432	
KG5487	G63525	
KG5488	G63403	
KG5489	G63614	
KG5495	G63929	
KG5496	G63624	
KG5497	G63622	
KG5498	G63623	
KG5534	G63610	
KG6002A	85030	89440
KG6003	83309	

COMPETITIVE & O.E.M. INTERCHANGE LIST
Lista de Intercambios contra Competidores y Equipo Original.
Liste d'interchange de produits compétitifs & d'équipement original (OEM)

KG6003	83309	
KG6004	85320	89429
KG6005	83216	
KG6006	85012	89413
KG6007	85007	
KG6008A	83122	89406
KG6009A	83303	
KG6010	83308	
KG6199	85012	89413
KG6201	83456	89447
KG6403	G63605	
KG6406	G63183	
KG6412	G63625	
KG6413	G63622	
KG6415	85013	89414
KG6416	83123	89405

LEYLAND TRUCK		
O.E.M #	Gabriel	Upgrade
1456033	85311	89424

LGE COACHWORKS		
O.E.M #	Gabriel	Upgrade
ASH-1136	G63623	
ASH-1154	G63622	

LINK MANUFACTURING LTD.		
O.E.M #	Gabriel	Upgrade
12010012	83023	
1201-0012	83023	
12010154	83051	
1201-0154	83051	
12010254	83051	
1201-0254	83051	
12011043	83025	
1201-1043	83025	
12011044	83025	
1201-1044	83025	
12011046	83049	
1201-1046	83049	
12011049	83025	
1201-1049	83025	
12011212	83013	
1201-1212	83013	
12011213	83005	
1201-1213	83005	
12019007	83054	
1201-9007	83054	
12019008	83054	
1201-9008	83054	
12019009	83054	
1201-9009	83054	
12019010	83053	
1201-9010	83053	
12019011	83053	
1201-9011	83053	
12019013	83062	
1201-9013	83062	
12019014	83062	
1201-9014	83062	
12019018	83062	
1201-9018	83062	
12019021	83062	
1201-9021	83062	
12020012	83023	
1202-0012	83023	
12020032	83016	
1202-0032	83016	
12020042	83025	
1202-0042	83025	
12020043	83025	
1202-0043	83025	
12020044	83025	
1202-0044	83025	
12020052	83021	
1202-0052	83021	
12020054	83021	
1202-0054	83021	
12021042	83025	
1202-1042	83025	
12021043	83025	
1202-1043	83025	
12021044	83025	
1202-1044	83025	
12021046	83049	
1202-1046	83049	
12021064	83024	
1202-1064	83024	
12021065	83002	
1202-1065	83002	
12021164	83031	
1202-1164	83031	
12021212	83013	
1202-1212	83013	
12021213	83005	
1202-1213	83005	
12021286	83056	
1202-1286	83056	
1202K065	83002	
1202K164	83031	
1202K264	83031	
1202K286	83056	
1210-0001	646155	
1210-0002	632147	
12100005	85734	
1210-0005	85734	
1210-0007	665937	
1210-0009	665937	
1210-0010	646155	
1210-0012	646155	
12100528	85043	
1210-0528	85043	
632129	83023	
632155	646177	
635705	83016	
646168	646155	
654669	83021	
654799	83025	
654811	83024	
654833	83021	
654847	83002	
654849	83031	
654867	83025	
671093	85043	

COMPETITIVE & O.E.M. INTERCHANGE LIST

Lista de Intercambios contra Competidores y Equipo Original.

Liste d'interchange de produits compétitifs & d'équipement original (OEM)

LG40450	83016	
LG40470	83016	
R711004	83049	
R71-1004	83049	
R711005	83024	
R71-1005	83024	
T711000	83031	
T71-1000	83031	
T711001	83031	
T71-1001	83031	
T711002	83002	
T71-1002	83002	

LION BUS		
O.E.M #	Gabriel	Upgrade
58913009	85959	
58913-009	85959	
58913009L	85959	
58913-009L	85959	
60665025	85036	89405
60665-025	85036	89405
60665025L	85036	89405
60665-025L	85036	89405

LION ELECTRIC		
O.E.M #	Gabriel	Upgrade
60670018	83166	
60670-018	83166	
60670018L	83166	
60670-018L	83166	

LODAL INC.		
O.E.M #	Gabriel	Upgrade
9960257	83122	89406

LONDON MIXER		
O.E.M #	Gabriel	Upgrade
MB-37737-30	646155	

MACK		
O.E.M #	Gabriel	Upgrade
12010012	83023	
1201-0012	83023	
12020012	83023	

1202-0012	83023	
12020032	83016	
1202-0032	83016	
1252607B000	85702	
141700000373	85061	89450
141700000380	85061	89450
141700005839	85098	89502
14QK1200P4	83207	89407
14QK-1200P4	83207	89407
14QK140	85304	
14QK-140	85304	
14QK140P1	83225	
14QK-140P1	83225	
14QK142	85305	
14QK-142	85305	
14QK142AP1	83215	
14QK-142AP1	83215	
14QK142P1	83215	
14QK-142P1	83215	
14QK143	83207	89407
14QK-143	83207	89407
14QK145	85307	
14QK-145	85307	
14QK20001P2	85308	89422
14QK-20001P2	85308	89422
14QK2100	83221	
14QK-2100	83221	
14QK2100P1	83221	
14QK-2100P1	83221	
14QK2100P2	83209	89414
14QK-2100P2	83209	89414
14QK2100P3	83207	89407
14QK-2100P3	83207	89407
14QK2100P4	83207	89407
14QK-2100P4	83207	89407
14QK2100P5	83221	
14QK-2100P5	83221	
14QK2100P6	85036	89405
14QK-2100P6	85036	89405
14QK2100P7	83221	
14QK-2100P7	83221	
14QK2100P8	83242	
14QK-2100P8	83242	
14QK2102	85304	
14QK-2102	85304	

14QK2105	83209	89414
14QK-2105	83209	89414
14QK2107	83209	89414
14QK2107	83215	
14QK-2107	83209	89414
14QK-2107	83215	
14QK2107P1	83215	
14QK-2107P1	83215	
14QK2107P2	83215	
14QK-2107P2	83215	
14QK2107P3	83215	
14QK-2107P3	83215	
14QK2108	83203	89436
14QK-2108	83203	89436
14QK2108P1	83203	89436
14QK-2108P1	83203	89436
14QK2110	85305	
14QK-2110	85305	
14QK2110P1	85305	
14QK-2110P1	85305	
14QK2111	83019	
14QK-2111	83019	
14QK2111P2	83019	
14QK-2111-P2	83019	
14QK2111P4	83019	
14QK-2111-P4	83019	
14QK2113	85001	89410
14QK-2113	85001	89410
14QK2113P3	85001	89410
14QK-2113P3	85001	89410
14QK2113P4	85007	
14QK-2113P4	85007	
14QK2113P5	85001	89410
14QK-2113P5	85001	89410
14QK2113P6	85007	
14QK-2113P6	85007	
14QK2115	85305	
14QK-2115	85305	
14QK2133M	85001	89410
14QK-2133M	85001	89410
14QK2133M2	85001	89410
14QK-2133M2	85001	89410
14QK2136M	85061	89450
14QK-2136M	85061	89450
14QK282P1	83216	
14QK-282P1	83216	

COMPETITIVE & O.E.M. INTERCHANGE LIST
Lista de Intercambios contra Competidores y Equipo Original.
Liste d'interchange de produits compétitifs & d'équipement original (OEM)

14QK282P3	83216	
14QK-282P3	83216	
14QK288P1	85007	
14QK-288-P1	85007	
14QK29001P2	85303	89422
14QK-29001P2	85303	89422
14QK29301P1	83207	89407
14QK-29301P1	83207	89407
14QK29301P2	83207	89407
14QK-29301P2	83207	89407
14QK29302	83207	89407
14QK-29302	83207	89407
14QK29302P1	83207	89407
14QK-29302P1	83207	89407
14QK303M	83050	
14QK-303M	83050	
14QK3100	85739	
14QK-3100	85739	
14QK3101M	85066	89448
14QK-3101M	85066	89448
14QK3103M	83050	
14QK-3103M	83050	
14QK3107M	85061	89450
14QK-3107M	85061	89450
14QK3108	85080	
14QK-3108	85080	
14QK3108M	85080	
14QK-3108M	85080	
14QK3114M	85061	89450
14QK-3114M	85061	89450
14QK3115M	85972	
14QK-3115M	85972	
14QK3116M	83101	
14QK-3116M	83101	
14QK322M	85933	89454
14QK-322M	85933	89454
14QK366	85036	89405
14QK-366	85036	89405
14QK366P1	85036	89405
14QK-366P1	85036	89405
14QK366P2	85036	89405
14QK-366P2	85036	89405
14QK366P3	85036	89405
14QK-366P3	85036	89405
14QK366P4	83209	89414
14QK-366P4	83209	89414
14QK372M	83221	
14QK-372M	83221	
14QK372M2	83209	89414
14QK-372M2	83209	89414
14QK372M3	83122	89406
14QK-372M3	83122	89406
14QK373	83215	
14QK-373	83215	
14QK374	83003	
14QK-374	83003	
14QK375M	83123	89405
14QK-375M	83123	89405
14QK376	83003	
14QK-376	83003	
14QK377M	83215	
14QK-377M	83215	
14QK378	83215	
14QK-378	83215	
14QK378M	83215	
14QK-378M	83215	
14QK382	83018	
14QK-382	83018	
14QK382P2	83018	
14QK-382-P2	83018	
14QK390	83105	
14QK-390	83105	
14QK391AM	83041	
14QK-391AM	83041	
14QK391AM2	83041	
14QK-391AM2	83041	
14QK391BM	83041	
14QK-391BM	83041	
14QK391BM2	83041	
14QK-391BM2	83041	
14QK391M	83041	
14QK-391M	83041	
14QK391M2	83041	
14QK-391M2	83041	
14QK392AM	85005	89430
14QK-392AM	85005	89430
14QK392AM2	85005	89430
14QK-392AM2	85005	89430
14QK392AM3	85005	89430
14QK-392AM3	85005	89430
14QK392BM	85005	89430
14QK-392BM	85005	89430
14QK392BM2	85321	
14QK-392BM2	85321	
14QK392BM3	85005	89430
14QK-392BM3	85005	89430
14QK392M	85005	89430
14QK-392M	85005	89430
14QK393AM	83123	89405
14QK-393AM	83123	89405
14QK393M	85010	
14QK-393M	85010	
14QK396	85005	89430
14QK-396	85005	89430
14QK396M	85005	89430
14QK-396M	85005	89430
14QK399M	83045	
14QK-399M	83045	
14QK399M2	83045	
14QK-399M2	83045	
14QK399M3	83045	
14QK-399M3	83045	
14QK410M	83125	
14QK-410M	83125	
14QK410M2	83137	
14QK-410M2	83137	
14QK410M3	83125	
14QK-410M3	83125	
14QK411	83007	
14QK-411	83007	
14QK411AM	83007	
14QK-411AM	83007	
14QK411M	83007	
14QK-411M	83007	
14QK413M	83111	
14QK-413M	83111	
14QK413M4	83110	
14QK-413M4	83110	
14QK413M6	83111	
14QK-413M6	83111	
14QK413M7	83111	
14QK-413M7	83111	
14QK414M	85906	89407
14QK-414M	85906	89407
14QK414M2	85909	

COMPETITIVE & O.E.M. INTERCHANGE LIST

Lista de Intercambios contra Competidores y Equipo Original.

Liste d'interchange de produits compétitifs & d'équipement original (OEM)

14QK-414M2	85909	
14QK415M	83112	
14QK-415M	83112	
14QK415M7	83112	
14QK-415M7	83112	
14QK421M	85014	
14QK-421M	85014	
14QK422M	85933	89454
14QK-422M	85933	89454
14QK423M	85978	
14QK-423M	85978	
14QK424M	83147	
14QK-424M	83147	
14QK427M	85080	
14QK-427M	85080	
14QK428	85080	
14QK-428	85080	
14QK428M	85080	
14QK-428M	85080	
14QK431M	85061	89450
14QK-431M	85061	89450
14QK432M	83050	
14QK-432M	83050	
14QK434M	85014	
14QK-434M	85014	
14QK439M	83050	
14QK-439M	83050	
14QK493M	83101	
14QK-493M	83101	
14QK5142	83142	
14QK-5142	83142	
20469001	85933	89454
20469002	85933	89454
20485632	85933	89454
20485633	85933	89454
20513881	85061	89450
20570098	83147	
20625775	85014	
20782199	85072	
20863239	85080	
20873442	83050	
20874147	83050	
20897198	85061	89450
20973993	85061	89450
20998401	85014	
21002497	85972	
21010744	83101	
21154393	83050	
21155033	83101	
21345868	83066	
21345869	83066	
21436096	85098	89502
21462382	85088	
21462384	85088	
21490486	83066	
21687170	85120	
21979343	85065	
22202559	85088	
22202560	85088	
22314111	85036	89405
22662254	83901	
22662259	83901	
23030654	83910	
23145372	83066	
23159760	85188	
23159762	85188	
23292027	85061	89450
23292028	85061	89450
23327756	83910	
23359394	83101	
23818296	85978	
24145343	85005	89430
25621571	83215	
25621955	85001	89410
25622221	83111	
25622345	83242	
25622466	85001	89410
25622612	83041	
25622613	83041	
25623321	83215	
25624241	83112	
25624351	85909	
25624837	83041	
25624862	85321	
25625091	83215	
25625151	85036	89405
25625187	83209	89414
25625223	83111	
25625234	83125	
25625241	83112	
25625254	83125	
25625635	83045	
25625636	83045	
25625637	83045	
25625743	85005	89430
25626048	85080	
25626149	85080	
25626196	83142	
25631922	83007	
25632145	85001	89410
25632147	85305	
25632561	83209	89414
25633154	85906	89407
41035000447861	83105	
4103-5000447861	83105	
41035000546892	83105	
4103-5000546892	83105	
44651211	85739	
446-51-211	85739	
471700000426	85014	
471700000431	85066	89448
471700000445	85080	
471700000451	85080	
471700002626	85061	89450
471700002861	85014	
471700006039	85088	
471700008934	85065	
471700009646	85088	
471700009647	85088	
471700015341	83127	
471700131921	85933	89454
4790225	83125	
47902-25	83125	
479029	83123	89405
47902-9	83123	89405
4940654	83216	
5533699	85302	89420
5554184	85302	89420
57241004	83110	

COMPETITIVE & O.E.M. INTERCHANGE LIST
Lista de Intercambios contra Competidores y Equipo Original.
Liste d'interchange de produits compétitifs & d'équipement original (OEM)

57241-004	83110	
57241006	83111	
57241-006	83111	
57241006L	83111	
57241-006L	83111	
572414	83110	
57241-4	83110	
596690044025	83209	89414
5966-90044025	83209	89414
60657-004	85072	
60657004	85072	
60657007	85072	
60657-007	85072	
60670006	83147	
60670-006	83147	
60670006L	83147	
60670-006L	83147	
60675001	85978	
60675-001	85978	
60675001L	85978	
60675-001L	85978	
6067513	85036	89405
60675-13	85036	89405
60680003	83112	
60680-003	83112	
60680003L	83112	
60680-003L	83112	
60680004	83143	
60680-004	83143	
60680004L	83143	
60680-004L	83143	
60680005	83142	
60680-005	83142	
60680005L	83142	
60680-005L	83142	
64838002	85933	89454
64838-002	85933	89454
650102	85001	89410
650107	85316	89426
650107MT	85316	89426
650400MT	85033	89427
650402	85311	89424
650402MT	85311	89424
650404	85310	89423
650404MT	85310	89423
650405	85023	89415
650405MT	85023	89415
650406	85024	
650408	85319	89428
650408MT	85319	89428
651012	83221	
651103	85036	89405
651151	83209	89414
70042	85302	89420
78530771	83127	
8083872	85978	
90045099	85906	89407
H60680004	83143	
H60680005	83142	
SDA141700000380	85061	89450
SDA471700000431	85066	89448
SDA471700002861	85014	
V10234121	83105	
V10242320	83105	

MAECO		
O.E.M #	Gabriel	Upgrade
1085	83214	
12608	83125	
12788	83216	
12866	83207	89407
16385	83215	
1668722	85030	89440
16720	83107	
16767	85013	89414
16769	83221	
16770	83209	89414
16771	83126	89430
16772	83122	89406
16773	85005	89430
16774	83215	
16775	83207	89407
16776	83122	89406
16777	85006	
16778	83203	89436
16779	83126	89430
16780	83123	89405
16781	85006	
16787	85030	89440
16949	83120	
16950	83118	

6025	83122	89406
6026	83204	
70018	85303	89422
70021	85303	89422
70029	85308	89422
70034	85302	89420
70039	85303	89422
70041	85305	
70042	85302	89420
70088	85307	
70123	85716	
70127	85006	
70128	85006	
70162	85716	
70163	85302	89420
70164	85716	
70300	85320	89429
70312	85001	89410
70315	85063	
70317	89402	
70331	85314	89425
70332	83314	
70334	85316	89426
70397	85006	
70402	85305	
70642	85300	89419
70644	85334	
70648	89414	
70650	89440	
70651	85013	89414
70652	85030	89440
70663	85013	89414
70691	85007	
70720	85934	
70721	83125	
74039	85303	89422
OE10881	85711	
OE10882	85740	
OE10883	85339	
OE12425	83214	
SC2920	83176	
SC-2920	83176	

COMPETITIVE & O.E.M. INTERCHANGE LIST

Lista de Intercambios contra Competidores y Equipo Original.

Liste d'interchange de produits compétitifs & d'équipement original (OEM)

MAN BUS		
O.E.M #	Gabriel	Upgrade
134	85709	
251700106654	85708	
25-1700-106-654	85708	
81437016537	85709	
81-43701-6537	85709	
81437016538	85708	
81-43701-6538	85708	
81437016539	85708	
81-43701-6539	85708	
81437016543	85708	
81-43701-6543	85708	
81437016572	85708	
81-43701-6572	85708	
81437016573	85722	
81-43701-6573	85722	
81437016609	85709	
81-43701-6609	85709	
9020M1042	85709	
9020M-1042	85709	

MANDALAY COACH		
O.E.M #	Gabriel	Upgrade
141700131809	85029	
141700131810	83160	
1616736000	85029	
16-16736-000	85029	
1616737000	83160	
16-16737-000	83160	
1616873000	85029	
16-16873-000	85029	
1616874000	83160	
16-16874-000	83160	
1618103000	85900	
16-18103-000	85900	
481700000493	85900	

MARMON		
O.E.M #	Gabriel	Upgrade
12020054	83021	
1202-0054	83021	
17001	83216	
1-7001	83216	
3711	83122	89406
37-1-1	83122	89406
5113928	85003	89411
51-139-28	85003	89411
511637	83123	89405
51-163-7	83123	89405
576451	83122	89406
665147	83216	

MATSON SCHOOL BUS		
O.E.M #	Gabriel	Upgrade
5392387	85303	89422

MAXPRO		
O.E.M #	Gabriel	Upgrade
17E-Z10042	85061	89450

MC NEILUS TRUCK & MAN.		
O.E.M #	Gabriel	Upgrade
1139039 MTM	85334	
1139046 MTM	83112	
1139059 MTM	83207	89407
1139069 MTM	83209	89414
1170719	632147	
12405FX1 MTM	85303	89422
1323106 MTM	85305	
1333575 MTM	85072	
1340975 MTM	83142	
1340976 MTM	85919	
1340979 MTM	83143	
1360386 MTM	85323	89436
1367383 MTM	83147	
1396513 MTM	85959	
1398980 MTM	83127	
1404068 MTM	85087	
1410046 MTM	85919	
1411765 MTM	83148	
1429317 MTM	85919	
1431085 MTM	85738	
1432386 MTM	85965	
1433009 MTM	85962	
1468783 MTM	85345	
1473224	646155	
1485576 MTM	85979	
1491909 MTM	83128	89436
1KK552 MTM	85967	
2034140 MTM	646155	
217330	85303	89422
2218640 MTM	83009	
3215395 MTM	83112	
3HR582 MTM	85013	89414
3HR916 MTM	83207	89407
4HA569 MTM	85932	89453
4KP398 MTM	85933	89454
5HA994 MTM	85916	89430
5HB645 MTM	83109	
5KK247 MTM	85977	
600-115994B	632147	
600-11599M	632147	
600-188206	646155	
64442AX MTM	83128	89436
6HA961 MTM	83123	89405
6HB390 MTM	83137	
6HD720 MTM	85909	
6HS773 MTM	83122	89406
6KP857 MTM	85000	89436
7HS237 MTM	83122	89406
7HS534 MTM	85906	89407
8KK524 MTM	83168	
9HB362 MTM	85976	
9KK464 MTM	85079	

MERITOR		
O.E.M #	Gabriel	Upgrade
14QK3100	85739	
14QK-3100	85739	
202447	85919	
21227751	87015	
44651211	85739	
446-51-211	85739	
671020	87015	
671506	86200	
671507	87015	
671907	85919	
680705	85737	
700115	85712	
7805F1020	86200	

COMPETITIVE & O.E.M. INTERCHANGE LIST

Lista de Intercambios contra Competidores y Equipo Original.

Liste d'interchange de produits compétitifs & d'équipement original (OEM)

7805-F-1020	86200	
A3280M9711	85919	
A-3280-M-9711	85919	
A7805F1020	86200	
A-7805F-1020	86200	
A7805L1000	85919	
A-7805L-1000	85919	
A7805L1026	87015	
A-7805L-1026	87015	
A7805P1030	85737	
A-7805P-1030	85737	
KIT11210	87015	
KIT11375	86200	
KIT11376	86200	
KIT11389	86200	
KIT11402	86200	
M646155	646155	
M83001	83001	
M83008	83008	
M83009	83009	
M83021	83021	
M83025	83025	
M83028	83028	
M83029	83029	
M83038	83038	
M83041	83041	
M83110	83110	
M83111	83111	
M83112	83112	
M83122	83122	89406
M83123	83123	89405
M83124	83124	89407
M83125	83125	
M83127	83127	
M83128	83128	89436
M83130	83130	
M83135	83135	
M83136	83136	
M83147	83147	
M83203	83203	89436
M83207	83207	89407
M83209	83209	89414

M83215	83215	
M83456	83456	89447
M85000	85000	89436
M85001	85001	89410
M85003	85003	89411
M85005	85005	89430
M85006	85006	
M85007	85007	
M85012	85012	89413
M85013	85013	89414
M85014	85014	
M85026	85026	
M85029	85029	
M85030	85030	89440
M85033	85033	89427
M85036	85036	89405
M85043	85043	
M85045	85045	
M85046	85046	89434
M85047	85047	89435
M85052	85052	
M85053	85053	89442
M85058	85058	89431
M85061	85061	89450
M85062	85062	89408
M85064	85064	
M85066	85066	89448
M85067	85067	89451
M85069	85069	89455
M85070	85070	89459
M85072	85072	
M85300	85300	89419
M85301	85301	
M85303	85303	89422
M85305	85305	
M85310	85310	89423
M85311	85311	89424
M85316	85316	89426
M85319	85319	89428
M85320	85320	89429
M85323	85323	89436
M85331	85331	
M85708	85708	
M85724	85724	89443
M85727	85727	
M85729	85729	
M85732	85732	
M85738	85738	

M85900	85900	
M85901	85901	
M85902	85902	
M85909	85909	
M85918	85918	89449
M85919	85919	
M85920	85920	89503
M85923	85923	89458
M85924	85924	89457
M85931	85931	89458
M85933	85933	89454
M85934	85934	
M85936	85936	89456
M85937	85937	
M89408	89408	
M89410	89410	
M89411	89411	
M89413	89413	
M89414	89414	
M89423	89423	
M89424	89424	
M89427	89427	
M89429	89429	
M89430	89430	
M89436	89436	
M89443	89443	
M89448	89448	
M89449	89449	
M89450	89450	
M89451	89451	

MITSUBISHI FUSO		
O.E.M #	Gabriel	Upgrade
MB161497	G63299	
MC091947	83162	
MC091950	83162	
MC114595	G63405	
MC714595	G63405	
MC809390	83103	
MC813135	83456	89447
MC814614	85009	
MC826268	G63610	
MK302296	G63610	

COMPETITIVE & O.E.M. INTERCHANGE LIST

Lista de Intercambios contra Competidores y Equipo Original.

Liste d'interchange de produits compétitifs & d'équipement original (OEM)

MK433638	G63610	

MOHAWK		
O.E.M #	Gabriel	Upgrade
010100905	85303	89422
01-0100-905	85303	89422
020273544	83203	89436
050134508	85732	
1235233	85736	
22012082	85702	
22012114	85700	
4968853	83216	
63677	85305	
6-367-7	85305	
680323	85700	
680485	85733	
97220100011	85704	
97-2201-00011	85704	
97999902320	85704	
97-9999-02320	85704	
MM6886	83207	89407
MM-6886	83207	89407
MM6957	83225	
MM-6957	83225	
MM74029	85308	89422
MM-74029	85308	89422

MONACO		
O.E.M #	Gabriel	Upgrade
01809924	83144	
01809925	85010	
1C34-18045-AA	83209	89414
1C34-18045-JA	83209	89414
24153249	85125	
24-153249	85125	
24153256	85124	
24-153256	85124	
24186629	85125	
24-186629	85125	
66153002	83124	89407
66153-002	83124	89407
9U94-18045-AA	83209	89414
9U9418080AA	83122	89406
9U94-18080-AA	83122	89406
9U9Z-18124-A	83209	89414
9U9Z18125A	83122	89406
9U9Z-18125-A	83122	89406
ASH-1022	83209	89414
ASH1023	83122	89406
ASH-1023	83122	89406
ASH-1205	83209	89414
ASH1206	83122	89406
ASH-1206	83122	89406
ASH-1228	83209	89414
ASH-1229	83209	89414
ASH1230	83122	89406
ASH-1230	83122	89406
ASH137	83122	89406
ASH-137	83122	89406
ASH-25822	83209	89414
ASH-25823	83209	89414
ASH25824	83122	89406
ASH-25824	83122	89406
ASH-294	83209	89414
AT-620	83209	89414
AT621	83122	89406
AT-621	83122	89406
AT-766	83209	89414
F4BE5A832MO	85125	
F4-BE5-A832-MO	85125	
F4BE5B492HO	85125	
F4-BE5-B492-HO	85125	
F4BE5C832MO	83124	89407
F4-BE5-C832-MO	83124	89407
F4BE5F324HO	85125	
F4-BE5-F324-HO	85125	
F4BE5F325HO	85124	
F4-BE5-F325-HO	85124	
W0005662	85125	
W0005663	85124	
W0006254	85125	

MONROE		
O.E.M #	Gabriel	Upgrade
12872	83219	
16385	83215	
171322	G63679	
33049	G63610	
34517	G63837	
34518	G63809	
34519	G63837	
34523	G63969	
34524	77968	
34612	83017	
34617	83019	
34655	G63714	
34656	G63778	
34657	G63716	
34684	G63622	
34685	G63808	
34686	G63809	
34687	G63810	
34721	83103	
34722	83400	
34729	G63414	
34730	G63386	
34732	G63455	
34751	G63607	
34759	G63624	
34760	G63622	
34761	G63623	
34768	83209	89414
34796	G63929	
34797	G63406	
34802	83216	
34803	G63306	
34817	G63355	
34821	G63406	
34895	83207	89407
34899	G63500	
34900	G63386	
34901	G63387	
34904	G63299	
34905	G63405	
34907	G63511	
34911	G63350	
34927	G63409	
34929	G63403	
34959	G63432	
34960	G63366	
34963	G63406	
34972	G63610	
34975	G63511	
37011	G63414	

COMPETITIVE & O.E.M. INTERCHANGE LIST

Lista de Intercambios contra Competidores y Equipo Original.

Liste d'interchange de produits compétitifs & d'équipement original (OEM)

37013	G63525	
37014	G63524	
37015	G63614	
37024	G63610	
37035	G63607	
37038	G63461	
37040	G63347	
37045	G63183	
37049	G63355	
37052	G63406	
37053	G63386	
37055	G63455	
37080	G63624	
37088	G63500	
37089	G63350	
37090	G63357	
37110	G63676	
37120	G63511	
37122	G63678	
37128	G63929	
37131	G63714	
37132	G63778	
37133	G63716	
37153	G63772	
37155	G63676	
37166	G63866	
37243	G63610	
37803	G63306	
550018	69575	
551001	83125	
551002	83122	89406
555004	G63299	
555011	83119	
555012	G63183	
555019	85069	89455
555026	83124	89407
555027	83124	89407
555028	83207	89407
555029	83144	
555031	G63622	
555032	G63623	
555033	G63386	
555034	G63387	
555035	G63357	
555041	G63866	
555043	83400	
557001	85013	89414
557002	83125	
557004	G63866	
557005	83136	
557006	83136	
557007	85010	
557008	85029	
557009	85007	
557010	83144	
557011	83160	
557012	85029	
557013	83127	
557014	83126	89430
557015	83209	89414
557017	85029	
557018	83127	
557020	83123	89405
557021	85051	
557022	85051	
557023	83144	
557026	83127	
557027	83144	
557028	85010	
557031	85010	
557033	85900	
557038	85125	
557039	85959	
65101	85062	89408
65102	85001	89410
65103	85320	89429
65104	85026	
65105	85026	
65106	83124	89407
65107	85316	89426
65108	85030	89440
65109	85058	89431
65110	85005	89430
65111	85006	
65112	89402	
65113	85012	89413
65114	85036	89405
65115	85027	
65116	85329	
65118	85001	89410
65119	85029	
65120	85010	
65122	85063	
65123	85054	
65124	85053	89442
65128	85031	
65130	85061	89450
65133	85935	
65139	85918	89449
65140	85918	89449
65141	85014	
65142	83131	
65143	83163	
65144	85928	
65145	85929	
65146	85925	
65147	85924	89457
65148	85918	89449
65153	85921	
65155	83175	
65156	85005	89430
65157	85954	
65158	85954	
65159	85070	89459
65160	85080	
65161	83136	
65162	85959	
65163	85954	
65164	85649	
65166	85090	
65167	G63969	
65168	77968	
65171	85964	
65175	85084	89460
65176	85084	89460
65177	85012	89413
65178	85998	
65179	85995	
65180	85639	
65181	85650	

COMPETITIVE & O.E.M. INTERCHANGE LIST

Lista de Intercambios contra Competidores y Equipo Original.

Liste d'interchange de produits compétitifs & d'équipement original (OEM)

65183	85181	
65184	85180	
65185	85180	
65186	85637	
65400	85033	89427
65401	85013	89414
65402	85311	89424
65404	85310	89423
65405	85023	89415
65406	85024	
65407	85736	
65408	85319	89428
65409	85003	89411
65410	85300	89419
65411	85036	89405
65412	83122	89406
65413	83136	
65415	85046	89434
65416	85000	89436
65417	85322	
65418	85906	89407
65419	85000	89436
65420	85013	89414
65421	85916	89430
65426	85054	
65428	85321	
65429	85030	89440
65430	85712	
65431	85909	
65432	85910	
65433	85910	
65434	85012	89413
65435	85901	
65436	85900	
65439	85716	
65440	85711	
65441	85704	
65442	85700	
65444	85311	89424
65448	85700	
65449	85702	
65451	85029	
65452	85733	
65453	85043	
65454	85030	89440
65455	85716	
65456	85376	
65457	85909	
65458	85908	
65459	85043	
65461	85059	
65463	85040	
65464	85716	
65465	85939	
65466	85047	89435
65467	85054	
65468	85069	89455
65469	85708	
65470	85708	
65471	85302	89420
65473	85329	
65474	85712	
65475	85065	
65476	85736	
65477	85702	
65478	85058	89431
65479	83122	89406
65480	83111	
65481	85036	89405
65482	85006	
65483	85978	
65484	85976	
65485	85972	
65486	85066	89448
65487	85927	
65488	85926	
65489	85331	
65490	85724	89443
65492	85931	89458
65493	85934	
65494	85061	89450
65495	85067	89451
65497	85933	89454
65498	85964	
65499	85963	
65500	85738	
65501	85323	89436
65502	85938	
65503	85919	
65504	85072	
65505	83147	
65506	83168	
65507	83143	
65508	83142	
65509	85079	
65510	85052	
65511	85939	
65512	85938	
65513	85338	
65514	89405	
65515	83125	
65516	85013	89414
65519	85060	
65521	85014	
65522	85082	
65523	85937	
65524	85936	89456
65525	87015	
65526	85956	
65527	85955	
65528	85069	89455
65530	85932	89453
65531	85334	
65532	85967	
65533	85120	
65534	85343	
65535	85954	
65536	85965	
65537	85962	
65539	85961	
65540	85959	
65541	85119	
65542	85102	
65546	85986	
65547	85650	
65548	85106	
6603	83103	
6604	83101	
6605	83613	
6607	85052	
6608	83128	89436
6609	83635	

COMPETITIVE & O.E.M. INTERCHANGE LIST

Lista de Intercambios contra Competidores y Equipo Original.

Liste d'interchange de produits compétitifs & d'équipement original (OEM)

6610	85051	
66101	83042	
66102	83059	
66104	83021	
66105	83044	
66106	83016	
66107	83048	
66108	83028	
66109	83048	
66111	83016	
66112	83017	
66113	83050	
66114	83045	
66115	83045	
66116	83018	
66117	83019	
66118	83001	
66120	85006	
66121	83047	
66122	83038	
66123	83004	
66124	83040	
66125	83035	
66126	83051	
6613	83123	89405
66131	83062	
66132	83001	
6614	83125	
66142	83039	
66143	83007	
66145	83008	
66147	83009	
66149	83022	
6615	83120	
66150	83003	
66152	83012	
66157	83015	
66159	83031	
66160	83054	
66161	83054	
66162	83025	

66169	83027	
66178	83023	
66179	83013	
66181	83025	
66182	83005	
66189	83041	
66193	83034	
66196	83027	
66198	83158	
66199	83048	
66200	83066	
66201	83081	
66203	83067	
66204	83024	
66209	83040	
66400	G63432	
66402	83157	
66403	83154	
66405	83154	
66406	85920	89503
66407	83134	
66412	83169	
66418	85918	89449
66419	85931	89458
66422	83163	
66423	85001	89410
66424	85310	89423
66425	85920	89503
66426	85924	89457
66428	85033	89427
66429	85311	89424
66430	83309	
66431	85066	89448
66432	85319	89428
66433	85918	89449
66434	85069	89455
66435	83219	
66436	85067	89451
66438	83363	
66442	83150	
66443	83150	
66445	83135	
66447	83180	
66448	85058	89431

66454	83166	
66455	83166	
66458	83396	
66502	646155	
66503	646155	
66504	632147	
66506	646155	
66535	85062	89408
6658	85009	
66601	83114	
66602	G63610	
66603	83103	
66604	83101	
66605	83613	
66607	85052	
66608	83128	89436
66609	83635	
66610	83130	
66611	83016	
66612	83017	
66613	83123	89405
66614	83125	
66615	83120	
66616	83018	
66617	83019	
66618	83159	
66620	83162	
66623	83004	
66624	83141	
66625	83162	
66626	85071	
66627	85045	
66628	83136	
66629	83107	
66630	83216	
66631	83140	
66632	83006	
66633	83127	
66634	83203	89436
66636	83127	
66638	83123	89405
66639	G63610	

COMPETITIVE & O.E.M. INTERCHANGE LIST

Lista de Intercambios contra Competidores y Equipo Original.

Liste d'interchange de produits compétitifs & d'équipement original (OEM)

66642	G63866	
66643	83007	
66645	83008	
66646	83308	
66647	83009	
66648	83112	
66649	83010	
66650	83003	
66653	83515	
66656	83110	
66657	83015	
66658	85009	
66659	83002	
66660	85059	
66661	83123	89405
66664	83215	
66665	83109	
66668	83312	89409
66669	83111	
66671	83123	89405
66672	83209	89414
66677	83114	
66678	83023	
66679	83013	
66680	83317	
66681	83025	
66682	83005	
66683	83101	
66684	85007	
66686	85014	
66691	83118	
66692	83120	
66693	83034	
66697	83164	
66699	83113	
66701	83215	
66707	83215	
66710	83209	89414
66713	83105	
66714	83216	
66715	85026	
66716	85042	
66717	83515	
66717	85716	
66719	83242	
66720	85003	89411
66721	83391	
66722	83518	
66811	83312	89409
66813	83303	
66828	83159	
66829	83103	
66833	83126	89430
66841	83216	
66858	G63183	
66860	83308	
66861	83309	
66863	83314	
66868	83219	
66871	G63605	
66878	83221	
66883	83314	
66884	83125	
66886	83124	89407
66891	83215	
66893	83203	89436
66894	83137	
66897	83126	89430
66898	83125	
66902	83401	
66903	83400	
66913	83303	
66921	83318	
66922	83301	
66923	83456	89447
66924	83317	
66956	83101	
66957	83225	
66966	85740	
66969	83126	89430
6701	83215	
6707	83215	
6710	83209	89414
6712	85040	
6713	83105	
6714	83216	
6715	85026	
6716	85042	
6718	85024	
6719	83242	
6720	85003	89411
6721	83103	
6811	83312	89409
6817	G63355	
6828	83219	
6829	83103	
6833	83126	89430
6839	G63357	
6841	83216	
6860	83308	
6861	83309	
6863	83314	
6878	83221	
6886	83124	89407
6891	83215	
6893	83203	89436
6894	83209	89414
6895	83204	
6897	83126	89430
6898	83125	
6900	G63386	
6901	G63387	
6902	83401	
6903	83400	
6911	G63350	
6913	83303	
6916	83123	89405
6921	83318	
6922	83301	
6923	83456	89447
6927	G63409	
6956	83101	
6957	83225	
6960	G63366	
6969	83126	89430
6994	83122	89406
70039	85303	89422
70166	85301	
70300	85320	89429

COMPETITIVE & O.E.M. INTERCHANGE LIST

Lista de Intercambios contra Competidores y Equipo Original.

Liste d'interchange de produits compétitifs & d'équipement original (OEM)

70312	85001	89410
70331	85314	89425
70332	83314	
70334	85316	89426
70402	85305	
70720	85934	
74001	85307	
74003	85314	89425
74004	85315	
74006	85304	
74012	85736	
74024	85308	89422
74025	85303	89422
74028	85302	89420
74029	85308	89422
74069	85301	
74070	85716	
74073	85320	89429
74074	85722	
74075	85712	
74078	85027	
74080	85332	
74081	85727	
74400	85700	
74402	85711	
74405	85300	89419
74406	85712	
74408	85702	
74409	85310	89423
74412	85704	
74413	85700	
74414	85723	
74415	85318	
74416	85705	89447
74417	85311	89424
74418	85709	
74420	85003	89411
74421	85708	
74422	85733	
74423	85712	
74424	85308	89422
74425	85724	89443
74426	85333	
74427	85308	89422
74429	85919	
74430	85340	
74431	85341	
74432	85970	
74433	85331	
74434	85711	
74436	85334	
74438	85734	
74439	85728	
74440	85729	
74441	85339	
74442	85727	
74443	85377	
74451	85711	
74452	85740	
74453	85339	
74454	85314	89425
74464	85318	
74465	85708	
74466	85318	
74467	85723	
74469	85345	
74471	85736	
74472	85303	89422
74473	85716	
74474	85916	89430
74480	85351	
SC-2920	83176	
SC2920	83176	

MOR-RYDE SUSPENSION		
O.E.M #	Gabriel	Upgrade
U0109006	G63866	
U0109-006	G63866	
U0109007	G63183	
U0109-007	G63183	
U0109014	83400	
U0109-014	83400	
U0109018	G63866	
U0109-018	G63866	

MOTOR COACH INDUSTRIES		
O.E.M #	Gabriel	Upgrade
01205219	85727	
01-205219	85727	
12051021	85340	
12-05-1021	85340	
12051022	85970	
12-05-1022	85970	
12051023	85341	
12-05-1023	85341	
12051101	85340	
12-05-1101	85340	
12051102	85970	
12-05-1102	85970	
12051103	85341	
12-05-1103	85341	
12051137	85340	
12-05-1137	85340	
12051138	85970	
12-05-1138	85970	
12051139	85341	
12-05-1139	85341	
12051142	85340	
12-05-1142	85340	
12051146	85340	
12-05-1146	85340	
12051147	85341	
12-05-1147	85341	
12051148	85970	
12-05-1148	85970	
12051150	85711	
12-05-1150	85711	
12051165	85711	
12-05-1165	85711	
12051166	85341	
12-05-1166	85341	
12051170	85340	
12-05-1170	85340	
12051176	85728	
12-05-1176	85728	
12051177	85729	

COMPETITIVE & O.E.M. INTERCHANGE LIST

Lista de Intercambios contra Competidores y Equipo Original.

Liste d'interchange de produits compétitifs & d'équipement original (OEM)

12-05-1177	85729	
12051178	85339	
12-05-1178	85339	
12051179	85727	
12-05-1179	85727	
12051188	85970	
12-05-1188	85970	
12051194	85339	
12-05-1194	85339	
12051199	85729	
12-05-1199	85729	
12051228	85711	
12-05-1228	85711	
12051242	85728	
12-05-1242	85728	
12051243	85729	
12-05-1243	85729	
12051244	85727	
12-05-1244	85727	
12051260	85728	
12-05-1260	85728	
12051261	85729	
12-05-1261	85729	
12051262	85727	
12-05-1262	85727	
12051264	85727	
12-05-1264	85727	
12051327	85728	
12-05-1327	85728	
12051328	85729	
12-05-1328	85729	
12051329	85727	
12-05-1329	85727	
12056000	85711	
12-05-6000	85711	
12056001	85740	
12-05-6001	85740	
12056002	85339	
12-05-6002	85339	
12056033	85339	

12-05-6033	85339	
12056053	85711	
12-05-6053	85711	
12056054	85740	
12-05-6054	85740	
12056055	85339	
12-05-6055	85339	
12056068	85727	
12-05-6068	85727	
1251G	85700	
12-5-1-G	85700	
1251GS	85700	
12-5-1-GS	85700	
12B51G	85700	
12B-5-1-G	85700	
12B51GS	85700	
12B-5-1-GS	85700	
12G51	85700	
12G-5-1	85700	
12J510	85733	
12J-5-10	85733	
12J510GS	85733	
12J-5-10GS	85733	
12J52	85312	
12J-5-2	85312	
12J54	85312	
12J-5-4	85312	
12J57	85312	
12J-5-7	85312	
12J571	85733	
12J-5-71	85733	
12J59	85700	
12J-5-9	85700	
12L4170	83158	
12L-4-170	83158	
12L5100	85727	
12L-5-100	85727	
12L5114	85727	
12L-5-114	85727	
12L558	85728	

12L-5-58	85728	
12L567	85728	
12L-5-67	85728	
12L569	85700	
12L-5-69	85700	
12L570	85700	
12L-5-70	85700	
12L571	85708	
12L-5-71	85708	
12L572	85709	
12L-5-72	85709	
12L588	85729	
12L-5-88	85729	
12L589	85729	
12L-5-89	85729	
12L596	85728	
12L-5-96	85728	
12L597	85728	
12L-5-97	85728	
12L598	85339	
12L-5-98	85339	
12L599	85339	
12L-5-99	85339	
12T113	85303	89422
12T-1-13	85303	89422
12TA01013	85303	89422
12TA-01-013	85303	89422
1497835	85711	
1498200	85740	
1498565	85339	
22012067	85700	
22024061	85704	
22045526	85702	
22052014	85702	
3178157	85700	
630127GS	85303	89422
63-0127GS	85303	89422
6314933	85708	
654789	83158	
680232	85733	
680322	85704	
680323	85700	

COMPETITIVE & O.E.M. INTERCHANGE LIST

Lista de Intercambios contra Competidores y Equipo Original.

Liste d'interchange de produits compétitifs & d'équipement original (OEM)

680333	85708	
680369	85708	
680374	85728	
680441	85729	
680452	85339	
680462	85728	
680470	85713	
680482	85727	
680485	85733	
680544	85711	
680546	85339	
680602	85339	
680677	85728	
680680	85729	
680681	85727	
690029	85700	
695125	85704	
85729	85729	
90-2587	85339	
97220100151	85700	
97-2201-00151	85700	
97221000164	85708	
97-2210-00164	85708	
97999902514	85700	
97-9999-02514	85700	
97999902585	85723	
97-9999-02585	85723	
97999902634	85733	
97-9999-02634	85733	
G1011822	85702	
G1101590	85713	
G1101590GS	85713	
G1201339	85702	
G5008069	85700	
OE10086S	85702	
OE10881	85711	
OE10882	85740	
OE10883	85339	
T121208	85727	
T12-1208	85727	

T141045GS	85700	
T14-1045GS	85700	
T141048	85302	89420
T14-1048	85302	89420
T141080	85728	
T14-1080	85728	
T141081	85729	
T14-1081	85729	
T141082	85727	
T14-1082	85727	

MOTORCRAFT		
O.E.M #	Gabriel	Upgrade
AA-229	G63773	
AA-450	G63773	
AA-456	G63772	
AA-457	G63678	
AA-483	G63837	
AA-484	G63837	
AA-485	G63837	
AA-486	G63607	
AA-494	83131	
AA-500	G63809	
AA-501	G63809	
AA-502	G63614	
AA-503	G63614	
AA-504	G63614	
AA-615	83135	
AA-616	83175	
AA-617	85928	
AS-1086	G63678	
AS-413	G63414	
AS-433	G63406	
AS-485G	G63622	
AS-498G	G63608	
AS-500G	G63624	
ASH-1022	83209	89414
ASH-1023	83122	89406
ASH-1130	G63622	
ASH-1131	G63622	
ASH-1132	G63622	
ASH-1135	G63623	

ASH-1136	G63623	
ASH-1154	G63622	
ASH-1155	G63623	
ASH-119	G63809	
ASH-120	G63837	
ASH-1205	83209	89414
ASH-1206	83122	89406
ASH-121	G63607	
ASH-122	G63614	
ASH-1228	83209	89414
ASH-1230	83122	89406
ASH-132	G63614	
ASH-137	83122	89406
ASH-23454	G63614	
ASH-23458	G63614	
ASH-24401	G63809	
ASH-24402	85928	
ASH-24433	G63837	
ASH-24434	G63607	
ASH-24492	83175	
ASH-24659	85181	
ASH-24660	85180	
ASH-25	83309	
ASH-25822	83209	89414
ASH-25823	83209	89414
ASH-25824	83122	89406
ASH-26	85006	
ASH-29	83314	
ASH-294	83209	89414
ASH-32	83125	
ASH-322	77969	
ASH-324	77968	
ASH-335	G63969	
ASH-36	85716	
ASH-362	G63607	
ASH-363	G63525	
ASH-364	G63524	
ASH-365	G63772	
ASH-366	G63608	
ASH-37	85712	
ASH-38	85314	89425
ASH-387	G63809	
ASH-39	85001	89410

COMPETITIVE & O.E.M. INTERCHANGE LIST

Lista de Intercambios contra Competidores y Equipo Original.

Liste d'interchange de produits compétitifs & d'équipement original (OEM)

ASH-391	G63809	
ASH-394	G63614	
ASH-397	83131	
ASH-398	85928	
ASH-407	G63809	
ASH-408	G63809	
ASH-51	G63773	
ASH-684	G63623	
ASH-69	83175	
ASH-706	G63614	
ASH-707	G63614	
ASH-712	69575	
ASH-824	G63929	
ASHV-1	G63678	
ASHV-1015	G63622	
ASHV-1025	G63623	
ASHV-1028	G63778	
ASHV-1046	G63772	
ASHV-1047	G63607	
ASHV-1048	G63525	
ASHV-1049	G63524	
ASHV-1050	G63608	
ASHV-1051	G63837	
ASHV-13	G63676	
ASHV-14	G63837	
ASHV-3	G63714	
ASHV-4	G63716	
ASHV-6	G63809	
ASHV-864	G63929	
ASHV-865	G63808	
ASHV-866	G63810	
ASHV-867	G63455	
ASHV-868	G63406	
ASHV-871	G63809	
ASHV-879	G63455	
AST-260	G63929	
AT-163G	G63622	
AT-164G	G63623	
AT-504G	G63679	
AT-506G	G63679	

AT-507G	G63607	
AT-546	G63678	
AT-547	G63775	
AT-554	85305	
AT-568	G63622	
AT-579	G63809	
AT-610	G63461	
AT-611	G63461	
AT-620	83209	89414
AT-621	83122	89406
AT-682	G63678	
AT-683	G63679	
AT-684	G63679	
AT-685	G63679	
AT-696	83140	
AT-710	G63809	
AT-713	G63614	
AT-715	G63614	
AT-716	G63809	
AT-764	G63678	
AT-765	G63772	
AT-766	83209	89414
AT-811	83135	
AX-135A	G63406	
AX-267A	83309	
AX-269A	83308	
AX-269A	83312	89409
AX-277A	83219	
AX-282A	85010	
AX-310	83215	
AX-327	G63773	
AX-332	85928	
AX-79A	83221	
AX-79A	85030	89440
AX-85A	83219	
AX-97A	83122	89406
AX-97A	85005	89430
CAH-001	85307	
CAH-001	85711	
CAH-003	83215	
CAH-006	85304	
CAH-012	85736	

CAH-025	85007	
CAH-028	85302	89420
CAH-029	85308	89422
CAH-069	83219	
CAH-069	85301	
CAHL-400	85303	89422
CAHL-400	85700	
CAHL-405	85300	89419
CAHL-406	85004	
CAHL-409	85310	89423
CAHL-417	85311	89424
CAT-722	83400	
CAT-729	G63414	
CAT-730	G63386	
CAT-731	G63409	
CAT-732	G63455	
CAT-745	G63608	
CAT-745	G63614	
CAT-751	G63607	
CAT-759	G63624	
CAT-760	G63622	
CAT-761	G63623	
CAT-768	83209	89414
CAT-793	G63414	
CAT-802	G63419	
CAT-803	G63306	
CAT-817	G63355	
CAT-839	G63357	
CAT-853	G63183	
CAT-895	83207	89407
CAT-899	G63500	
CAT-900	G63386	
CAT-901	G63387	
CAT-904	G63299	
CAT-905	G63405	
CAT-907	G63511	
CAT-911	G63350	
CAT-912	G63625	
CAT-927	G63409	
CAT-929	G63403	
CAT-930	G63461	
CAT-944	G63347	

COMPETITIVE & O.E.M. INTERCHANGE LIST
Lista de Intercambios contra Competidores y Equipo Original.
Liste d'interchange de produits compétitifs & d'équipement original (OEM)

CAT-960	G63366	
CAT-963	G63525	
CAT-972	G63610	
CAT-975	G63511	
CAX-001	85307	
CAX-707	83215	
CAX-707	85001	89410
CAX-710	83209	89414
CAX-720	85003	89411
CAX-811	83312	89409
CAX-828	83207	89407
CAX-828	85012	89413
CAX-833	83303	
CAX-833	85005	89430
CAX-841	83216	
CAX-860	83308	
CAX-861	83309	
CAX-863	83314	
CAX-878	83221	
CAX-886	83207	89407
CAX-886	85014	
CAX-891	83215	
CAX-891	85314	89425
CAX-893	83203	89436
CAX-893	85000	89436
CAX-893	85043	
CAX-894	83209	89414
CAX-894	85005	89430
CAX-894	85013	89414
CAX-898	83125	
CAX-898	85006	
CAX-913	83303	
CAX-916	83123	89405
CAX-916	85036	89405
CAX-921	83318	
CAX-923	83102	
CAX-923	83456	89447
CAX-924	83317	
CAX-957	83225	
CAX-969	83221	
CAX-969	85030	89440
CLT-109	G63614	
CLT-112	G63525	
CLT-113	G63524	
CLT-124	G63610	

MUNCIE RECLAMATION		
O.E.M #	Gabriel	Upgrade
665459	89447	
665568	85051	
665569	85045	
680334	85709	
97221000164	85708	
97-2210-00164	85708	
H5320415006	85051	
H53-20415-006	85051	
H5321144004	85045	
H53-21144-004	85045	
MR1623	85700	
MR1710	85713	
MR1751	85713	
MR1763	85300	89419
MR1765	85713	
MR25767	85702	
MR2960	85702	
MR2996	85704	
MR3303	85709	
MR3304H	85709	
MR3306	85705	89447
MR6394	85723	
MR6535	85708	
MR6536	85722	

NATIONAL RV INC.		
O.E.M #	Gabriel	Upgrade
1C34-18045-AA	83209	89414
1C34-18045-JA	83209	89414
24153249	85125	
24-153249	85125	
24153256	85124	
24-153256	85124	
24186629	85125	
24-186629	85125	
9U94-18045-AA	83209	89414
9U9418080AA	83122	89406
9U94-18080-AA	83122	89406
9U9Z-18124-A	83209	89414
9U9Z18125A	83122	89406
9U9Z-18125-A	83122	89406
ASH-1022	83209	89414
ASH1023	83122	89406
ASH-1023	83122	89406
ASH-1205	83209	89414
ASH1206	83122	89406
ASH-1206	83122	89406
ASH-1228	83209	89414
ASH-1229	83209	89414
ASH1230	83122	89406
ASH-1230	83122	89406
ASH137	83122	89406
ASH-137	83122	89406
ASH-25822	83209	89414
ASH-25823	83209	89414
ASH25824	83122	89406
ASH-25824	83122	89406
ASH-294	83209	89414
AT-620	83209	89414
AT621	83122	89406
AT-621	83122	89406
AT-766	83209	89414
C800853	83207	89407
F4BE5A832MO	85125	
F4-BE5-A832-MO	85125	
F4BE5B492HO	85125	
F4-BE5-B492-HO	85125	
F4BE5F324HO	85125	
F4-BE5-F324-HO	85125	
F4BE5F325HO	85124	
F4-BE5-F325-HO	85124	
W0005662	85125	
W0005663	85124	
W0006254	85125	

NEOPLAN BUS		
O.E.M #	Gabriel	Upgrade
241700106149	83216	
24-1700-106-149	83216	
241700999362	85009	
24-1700-999-362	85009	
251700101426	85705	89447
25-1700-101-426	85705	89447
680307	85705	89447
AA1002002	85705	89447
AA1002003	85705	89447
AA1802002	85705	89447
AC1002002	85705	89447
AC1002002GS	85705	89447
AC1002003	85705	89447
BN1002002	85009	

COMPETITIVE & O.E.M. INTERCHANGE LIST

Lista de Intercambios contra Competidores y Equipo Original.

Liste d'interchange de produits compétitifs & d'équipement original (OEM)

BT1002011	83216	
CI 1002003	85705	89447
CL1002003	85705	89447
DT1802002	85705	89447
DZ1002002	85705	89447
GJ1002003	85705	89447
MM1002002	85705	89447
MM1002003	85705	89447

NEW FLYER		
O.E.M #	Gabriel	Upgrade
009863	85722	
015813	85708	
015915	85711	
016415	85722	
064845	85711	
152959	85708	
68027440Y	85716	
680346	85722	
680352	85711	
68037840B	85720	
68050440X	85716	
68050640Y	85732	
680671	85708	
690102	85711	
69536140Y	87016	
69536640Y	85732	
97221000164	85708	
97-2210-00164	85708	

NEWMAR CORP.		
O.E.M #	Gabriel	Upgrade
141700131809	85029	
141700131810	83160	
1616736000	85029	
16-16736-000	85029	
1616737000	83160	
16-16737-000	83160	
1616874000	83160	
16-16874-000	83160	
1618103000	85900	
16-18103-000	85900	
481700000493	85900	

90045455	85909	
ASH-1229	83209	89414
ASH-25822	83209	89414
ASH-25823	83209	89414
ASH25824	83122	89406
ASH-25824	83122	89406

NEXUS RV		
O.E.M #	Gabriel	Upgrade
ASH-1136	G63623	
ASH1154	G63622	
ASH-1154	G63622	
ASH-1229	83209	89414
ASH-25822	83209	89414
ASH-25823	83209	89414
ASH25824	83122	89406
ASH-25824	83122	89406

NISSAN		
O.E.M #	Gabriel	Upgrade
56101-30Z02	G63610	
56101Z5008	83114	
56101-Z5008	83114	
56101Z5014	83162	
56101-Z5014	83162	
56101Z5017	83162	
56101-Z5017	83162	
56110-30Z02	G63610	
56110T8123	G63432	
56110-T8123	G63432	
56110T8129	G63432	
56110-T8129	G63432	
56110Z5008	83114	
56110-Z5008	83114	
56110Z5014	83162	
56110-Z5014	83162	
56110Z5017	83162	
56110-Z5017	83162	
56210Z6003	85308	89422
56210-Z6003	85308	89422
66400	G63432	

NOVA BUS		
O.E.M #	Gabriel	Upgrade
12J510	85733	
12J-5-10	85733	
22045526	85702	
22052014	85702	
481700131250	85377	
680232	85733	
680323	85700	
680326	85700	
680470	85713	
680480	85377	
695393	85377	
97220100151	85700	
97-2201-00151	85700	
97999902514	85700	
97-9999-02514	85700	
G1011822	85702	
G1101590	85713	
G1201339	85702	
G1203223	85702	
G5008070	85700	
N16248	85377	
N22212	85700	
N31831	85377	
OE 10086S	85702	

ORION BUS INDUSTRIES		
O.E.M #	Gabriel	Upgrade
0101345014	85307	
010134501-4	85307	
0101345084	85732	
010134508-4	85732	
0102345034	85308	89422
010234503-4	85308	89422
0201175034	85720	
020117503-4	85720	
020117504	85720	
020273541	83203	89436
0202735414	85000	89436
020273541-4	85000	89436
020273544	83203	89436
0501345014	85716	
050134501-4	85716	
0501345024	85732	

COMPETITIVE & O.E.M. INTERCHANGE LIST
Lista de Intercambios contra Competidores y Equipo Original.
Liste d'interchange de produits compétitifs & d'équipement original (OEM)

0501345064	85732	
050134506-4	85732	
050134508	85732	
050134509	85732	
050134510	85732	
050134511	85732	
0501345-11	85732	
050134513	85732	
050230501	85716	
0502315014	85716	
050231501-4	85716	
0502315024	85716	
050231502-4	85716	
050231505	85716	
050231507	85716	
060131507	87016	
060131508	87016	
070131502	87016	
070131506	87016	
070231514	85729	
070231527	85729	
20117501	85720	
20117504	85720	
20117505	85720	
6430645	85729	
680091	85303	89422
680102	85712	
680274	85716	
680352	85711	
680378	85720	
680504	85716	
680506	85732	
690102	85711	
695327	85732	
695343	85732	
695347	85732	
695366	85732	
695389	87016	
695420	85729	
695421	87016	
695440	85729	

97999902635	85732	
97-9999-02635	85732	
97999902636	85716	
97-9999-02636	85716	
A4890	85712	
A-4890	85712	
OB020570	85711	
OB020764	85716	
OB3166657	85700	

OSHKOSH MOTORS		
O.E.M #	Gabriel	Upgrade
12020054	83021	
1202-0054	83021	
12405F	85734	
12405F1	85303	89422
12405F-1	85303	89422
12405FX1	85303	89422
1398980	83127	
1445910	85300	89419
1573270	83207	89407
1573280	83221	
1583470	85051	
1745500	89430	
2034140	646177	
2173340	85303	89422
2218640	83009	
26228A	83122	89406
26228-A	83122	89406
2JD137	83119	
3638112	G63183	
400242	83312	89409
40-0242	83312	89409
4036892	G63605	
404845	85304	
40-4845	85304	
404951	85316	89426
40-4951	85316	89426
405348	85058	89431
40-5348	85058	89431
406967	85030	89440
40-6967	85030	89440
5353054	85303	89422
5361994	85734	
651444	83221	
665040	85303	89422
665060	83122	89406
690049	85303	89422
90044448	85051	
GBL654918	83118	
P117099	83120	
P117146	83118	
RW24285	83119	

OSTERLUND TRUCK		
O.E.M #	Gabriel	Upgrade
220S510	85712	
220-S5-10	85712	
59011	83214	
680117	85300	89419

OTTAWA TRUCK		
O.E.M #	Gabriel	Upgrade
53540451	85300	89419
59011	83214	
680117	85300	89419
90013787	85310	89423
90027577	85720	
9007342	85303	89422

PACIFIC TRUCK & TRAILER		
O.E.M #	Gabriel	Upgrade
507202C1	85030	89440

PAGE SUSPENSION		
O.E.M #	Gabriel	Upgrade
1080099	83203	89436
1081933	83204	
665133	83203	89436
665267	85029	
A2212	85029	
A-2212	85029	

PAI CORP.		
O.E.M #	Gabriel	Upgrade
HSA5067	85305	
HSA-5067	85305	
HSA5080	83221	
HSA-5080	83221	
HSA5095	83215	
HSA-5095	83215	

COMPETITIVE & O.E.M. INTERCHANGE LIST

Lista de Intercambios contra Competidores y Equipo Original.

Liste d'interchange de produits compétitifs & d'équipement original (OEM)

PEERLESS TRAILER		
O.E.M #	Gabriel	Upgrade
1201	83125	
120-1	83125	
7261	83125	
72-61	83125	

PETERBILT		
O.E.M #	Gabriel	Upgrade
0200376	85302	89420
02-00376	85302	89420
0200495	85302	89420
02-00495	85302	89420
0201759	83312	89409
02-01759	83312	89409
0201787	85062	89408
02-01787	85062	89408
0201890	85012	89413
02-01890	85012	89413
0202061	85013	89414
02-02061	85013	89414
0202142	85036	89405
02-02142	85036	89405
0202225	85012	89413
02-02225	85012	89413
0202736	85302	89420
02-02736	85302	89420
02027362	85302	89420
02-02736-2	85302	89420
0202736PLUS	85302	89420
02-02736PLUS	85302	89420
0202736PLUS2	85302	89420
02-02736PLUS-2	85302	89420
0202737	85062	89408
02-02737	85062	89408
02027372	85062	89408
02-02737-2	85062	89408
0202737PLUS	85062	89408
02-02737PLUS	85062	89408
0202737PLUS2	85062	89408
02-02737PLUS-2	85062	89408
0202738	85012	89413
02-02738	85012	89413
02027382	85012	89413
02-02738-2	85012	89413
0202738PLUS	85012	89413
02-02738PLUS	85012	89413
0202738PLUS2	85012	89413
02-02738PLUS-2	85012	89413
0202739	85013	89414
02-02739	85013	89414
02027392	85013	89414
02-02739-2	85013	89414
0202739PLUS	85013	89414
02-02739PLUS	85013	89414
0202740	85036	89405
02-02740	85036	89405
02027402	85036	89405
02-02740-2	85036	89405
0202741	85012	89413
02-02741	85012	89413
02027412	85012	89413
02-02741-2	85012	89413
0202742	85062	89408
02-02742	85062	89408
02027422	85062	89408
02-02742-2	85062	89408
0203020	85910	
02-03020	85910	
0204010	85012	89413
02-04010	85012	89413
02040102	85012	89413
02-04010-2	85012	89413
020739PLUS2	85013	89414
02-0739PLUS-2	85013	89414
0301635	85308	89422
03-01635	85308	89422
0304176	85308	89422
03-04176	85308	89422
0304176PLUS	85308	89422
03-04176PLUS	85308	89422
0304629	85311	89424
03-04629	85311	89424
0305106	85033	89427
03-05106	85033	89427
0305384	85033	89427
03-05384	85033	89427
0306084	85033	89427
03-06084	85033	89427
0306084PLUS	85033	89427
03-06084PLUS	85033	89427
0306084PLUS2	85033	89427
03-06084PLUS-2	85033	89427
0307281	85311	89424
03-07281	85311	89424
0307421	85311	89424
03-07421	85311	89424
0307421PLUS	85311	89424
03-07421PLUS	85311	89424
0307421PLUS2	85311	89424
03-07421PLUS-2	85311	89424
0307421SPL	85311	89424
03-07421SPL	85311	89424
0307423	85033	89427
03-07423	85033	89427
03074232	85033	89427
03-07423-2	85033	89427
0307423PLUS	85033	89427
03-07423PLUS	85033	89427
0307423PLUS2	85033	89427
03-07423PLUS-2	85033	89427
0307424	85311	89424
03-07424	85311	89424
0307424PLUS	85311	89424
03-07424PLUS	85311	89424
0308350	85343	
03-08350	85343	
03083502	85343	
03-08350-2	85343	
0308781	85069	89455
03-08781	85069	89455
03087812	85069	89455
03-08781-2	85069	89455
1012032002PLUS	85320	89429
10-12032-002PLUS	85320	89429
1012032002PLUS2	85320	89429
10-12032-002PLUS-2	85320	89429
1012542000PLUS	85901	
10-12542-000PLUS	85901	
11418	646177	
11418WAC	646177	
12010012	83023	
1201-0012	83023	
12010054	83021	
1201-0054	83021	
12018001	83908	
1201-8001	83908	
12018002	83081	
1201-8002	83081	
12018006	83081	
1201-8006	83081	
12020012	83023	
1202-0012	83023	
12020032	83016	
1202-0032	83016	
12020054	83021	
1202-0054	83021	
12021044	83025	
1202-1044	83025	
1288701	85013	89414
12887-01	85013	89414
1288702	85013	89414
12887-02	85013	89414

COMPETITIVE & O.E.M. INTERCHANGE LIST
Lista de Intercambios contra Competidores y Equipo Original.
Liste d'interchange de produits compétitifs & d'équipement original (OEM)

1613947000PLUS	85319	89428
16-13947-000PLUS	85319	89428
1613947000PLUS2	85319	89428
16-13947-000PLUS-2	85319	89428
1672501	83126	89430
16725-01	83126	89430
1707378PAC	85182	
1949501	83126	89430
19495-01	83126	89430
2016755	83042	
20-16755	83042	
2018987C1PLUS	85003	89411
2018987C1PLUS2	85003	89411
2018987C1PLUS-2	85003	89411
2308233	85308	89422
23-08233	85308	89422
2310393	85308	89422
23-10393	85308	89422
2312262	85012	89413
23-12262	85012	89413
25523002	83908	
25523024	83081	
2902455	83008	
29-02455	83008	
2906005	83035	
29-06005	83035	
2906032	83035	
29-06032	83035	
471700004423	85109	
471700013186	85109	
4790213PLUS	83122	89406
47902-13PLUS	83122	89406
47902-13PLUS-2	83122	89406
60670005PLUS	83137	
60670-005PLUS	83137	
60670-005PLUS-2	83137	
60670008	83123	89405
60670-008	83123	89405
60670008L	83123	89405
60670-008L	83123	89405
60670008PLUS	83123	89405
60670-008PLUS	83123	89405
60670-008PLUS-2	83123	89405
60680003	83112	
60680-003	83112	
60680003L	83112	
60680-003L	83112	

60680004	83143	
60680-004	83143	
60680004L	83143	
60680-004L	83143	
60680005	83142	
60680-005	83142	
60680005L	83142	
60680-005L	83142	
654782	83008	
654812	83042	
654919	83035	
665133	83203	89436
665174	85060	
665565PLUS	85007	
665565PLUS2	85007	
665565PLUS-2	85007	
665617	85031	
6656172	85031	
665617-2	85031	
665632	85013	89414
665633	85033	89427
665655	85062	89408
665656	85012	89413
665657	85013	89414
665658	85036	89405
665660	85033	89427
665662	85012	89413
665738	85910	
665738-2	85910	
665752	85067	89451
665762	85012	89413
665783	83123	89405
665784	83122	89406
665785	83137	
665788	85000	89436
665788-2	85000	89436
665826	85069	89455
665844	85069	89455
665858	85070	89459
6658582	85070	89459
665858-2	85070	89459
665876	85959	
665918	85900	
665926	85047	89435
665927	85901	
665928	85062	89408

665930	85001	89410
665931	83312	89409
665932	85012	89413
665945	85902	
665945-2	85902	
665950	85902	
671052	85070	89459
6710522	85070	89459
671052-2	85070	89459
671091	85069	89455
671092	85012	89413
671654	85936	89456
671699	85937	
671794	85067	89451
671962PLUS	85936	89456
671962SPL	85936	89456
671963	85937	
680026	85302	89420
680027	85308	89422
680185	85308	89422
680237	85303	89422
680239	85310	89423
680240	85302	89420
680241	85311	89424
680242	85308	89422
680253	85314	89425
680261	85062	89408
6802612	85062	89408
680261-2	85062	89408
680279	83209	89414
680280	85906	89407
680281	85003	89411
680303	85007	
680348	85012	89413
680425	85320	89429
680435	85033	89427
680457	85302	89420
680459	85311	89424
680473	85319	89428
680586	85311	89424
70701PLUS	85900	
800670	85060	
8086053PLUS	85047	89435
85013A0C	85013	89414
85013ac0	85013	89414
90044011	85004	
90044025PLUS	83209	89414
90044089PLUS	83124	89407
90044089PLUS-2	83124	89407
90045132	85909	
90045605	85109	

COMPETITIVE & O.E.M. INTERCHANGE LIST

Lista de Intercambios contra Competidores y Equipo Original.

Liste d'interchange de produits compétitifs & d'équipement original (OEM)

90045803	85109	
90045812	85109	
960271054	83011	
96027-1054	83011	
ACHB966	83136	
B711000	85031	
B71-1000	85031	
B711001	85070	89459
B71-1001	85070	89459
B711002	85001	89410
B71-1002	85001	89410
B711003	83312	89409
B71-1003	83312	89409
B716000	85959	
B71-6000	85959	
B71-6000-2	85959	
B716002	85012	89413
B71-6002	85012	89413
B7160022	85012	89413
B71-6002-2	85012	89413
B716003	85029	
B71-6003	85029	
B71-6003-2	85029	
B716004	85084	89460
B71-6004	85084	89460
B716005	85084	89460
B71-6005	85084	89460
B716006	85084	89460
B71-6006	85084	89460
B716007	85062	89408
B71-6007	85062	89408
B716008	83312	89409
B71-6008	83312	89409
B716009	83219	
B716009	85062	89408
B71-6009	83219	
B71-6009	85062	89408
B716010	85023	89415
B71-6010	85023	89415
B716011	85062	89408
B71-6011	85062	89408
B716012	85119	
B71-6012	85119	
B716013	85012	89413
B71-6013	85012	89413
B716015	85012	89413
B71-6015	85012	89413
B716016	85012	89413
B71-6016	85012	89413
B716016A	85012	89413
B71-6016A	85012	89413
B716017	85910	
B71-6017	85910	
B716018	85012	89413
B71-6018	85012	89413
B716019	85989	
B71-6019	85989	
B716020	85989	
B71-6020	85989	
BFRG 072	85182	
C711002	85067	89451
C71-1002	85067	89451
C7110022	85067	89451
C71-1002-2	85067	89451
C711002PLUS	85067	89451
C71-1002PLUS	85067	89451
C711002PLUS2	85067	89451
C71-1002PLUS-2	85067	89451
C711011	85069	89455
C71-1011	85069	89455
C711011PLUS	85069	89455
C71-1011PLUS	85069	89455
C711011PLUS2	85069	89455
C71-1011PLUS-2	85069	89455
C711011SPL	85069	89455
C71-1011SPL	85069	89455
C711013	85985	
C71-1013	85985	
C711014	85936	89456
C71-1014	85936	89456
C711016	85067	89451
C71-1016	85067	89451
C711017	85069	89455
C71-1017	85069	89455
C716000	85067	89451
C71-6000	85067	89451
C7160002	85067	89451
C71-6000-2	85067	89451
C716002	85311	89424
C71-6002	85311	89424
C716003	85988	
C71-6003	85988	
C716004	85343	
C71-6004	85343	
C716005	85069	89455
C71-6005	85069	89455
C716015	85067	89451
C71-6015	85067	89451
K374102	83215	
K374-10-2	83215	
K37426PLUS	85001	89410
K374-26PLUS	85001	89410
K37426PLUS2	85001	89410
K374-26PLUS-2	85001	89410
K374272	85001	89410
K374-27-2	85001	89410
K37428PLUS	85314	89425
K374-28PLUS	85314	89425
K37429PLUS	85310	89423
K374-29PLUS	85310	89423
K374-33-2	83312	89409
K37433PLUS	83312	89409
K374-33PLUS	83312	89409
K374-33PLUS-2	83312	89409
PP1058870	83059	
PP2582870	83012	
R711004	83049	
R71-1004	83049	
R711005	83024	
R71-1005	83024	
R716000	83067	
R71-6000	83067	
R716005	83042	
R71-6005	83042	
R716007	83008	
R71-6007	83008	
R716008	83035	
R71-6008	83035	
R716009	83081	
R71-6009	83081	
R716010	83067	
R71-6010	83067	
TK19679	83126	89430

PHOENIX CRUISER RV		
O.E.M #	Gabriel	Upgrade
ASH-1136	G63623	
ASH-1154	G63622	

PIERCE MANUFACTURING INC.		
O.E.M #	Gabriel	Upgrade
060665013	85965	
060665-013	85965	
060665-013L	85965	
1445910	85300	89419

COMPETITIVE & O.E.M. INTERCHANGE LIST
Lista de Intercambios contra Competidores y Equipo Original.
Liste d'interchange de produits compétitifs & d'équipement original (OEM)

1943267	85962	
2034140	646177	
400242	83312	89409
40-0242	83312	89409
40-3089	83312	89409
40-3135	85030	89440
404845	85304	
40-4845	85304	
404951	85316	89426
40-4951	85316	89426
405348	85058	89431
40-5348	85058	89431
406967	85030	89440
40-6967	85030	89440
60665013	85965	
60665-013	85965	
60665-013L	85965	
680401	85307	
9HE302	85919	
SD-15165	85304	

POWERHOUSE COACH INC.		
O.E.M #	Gabriel	Upgrade
141700005838	85098	89502
20433424	85061	89450
20485632	85933	89454
20485633	85933	89454
20551628	85066	89448
20973993	85061	89450
21137330	85933	89454
21436086	85098	89502
21462380	85088	
471700000443	85066	89448
471700003832	85933	89454
471700006040	85088	
64838003	85933	89454
64838-003	85933	89454
64838003L	85933	89454
64838-003L	85933	89454

POWERPACKER		
O.E.M #	Gabriel	Upgrade
PP1058870	83059	

PREVOST		
O.E.M #	Gabriel	Upgrade
010100905	85303	89422
01-0100-905	85303	89422
0822045526	85702	

12L589	85729	
12L-5-89	85729	
12T113	85303	89422
12T-1-13	85303	89422
19501288	85729	
19501289	85728	
19501547	85740	
19501669	85339	
19502711	85702	
19506846	85339	
196533	85708	
3166657	85700	
481700000207	85329	
481700000209	85713	
481700999376	85329	
481700999386	85736	
52001	85708	
630001	85713	
630080	85713	
630091	85736	
630103	85329	
630127	85736	
630134	85329	
630161	85736	
630234	85329	
630236	85329	
630252	85329	
630253	85713	
631013	85329	
63-1013	85329	
650407	85736	
680323	85700	
680422	85329	
680492	85713	
690060	85713	
74939852	85308	89422
G1011822	85702	
G5008070	85700	
N22212	85700	

PROPAR		
O.E.M #	Gabriel	Upgrade
PROSH646155	646155	
PROSH83002	83002	
PROSH83008	83008	
PROSH83009	83009	
PROSH83027	83027	
PROSH83042	83042	
PROSH83122	83122	89406
PROSH83125	83125	
PROSH83127	83127	
PROSH83128	83128	89436
PROSH83130	83130	
PROSH85000	85000	89436
PROSH85003	85003	89411
PROSH85005	85005	89430
PROSH85006	85006	
PROSH85012	85012	89413
PROSH85030	85030	89440
PROSH85045	85045	
PROSH85052	85052	
PROSH85053	85053	89442
PROSH85062	85062	89408
PROSH85069	85069	89455
PROSH85070	85070	89459
PROSH85310	85310	89423
PROSH85311	85311	89424
PROSH85316	85316	89426
PROSH85321	85321	
PROSH85322	85322	
PROSH85323	85323	89436
PROSH85338	85338	
PROSH85919	85919	
PROSH85923	85923	89458
PROSH85924	85924	89457
PROSH85932	85932	89453
PROSH85936	85936	89456
PROSH85954	85954	
PROSH89437	89437	

PRT		
O.E.M #	Gabriel	Upgrade
925000	83002	
925001	83008	
925002	83011	
925003	83012	

COMPETITIVE & O.E.M. INTERCHANGE LIST

Lista de Intercambios contra Competidores y Equipo Original.

Liste d'interchange de produits compétitifs & d'équipement original (OEM)

925004	83016	
925005	83017	
925006	83021	
925007	83023	
925008	83024	
925009	83025	
925010	83027	
925011	83028	
925012	83029	
925013	83035	
925014	83038	
925015	83039	
925016	83040	
925017	83041	
925018	83042	
925019	83044	
925021	83047	
925022	83048	
925024	83050	
925025	83051	
925026	83053	
925027	83054	
925028	83056	
925029	83062	
925030	83065	
925032	83067	
925033	83081	
925034	83101	
925035	83103	
925036	83107	
925037	83109	
925038	83112	
925039	83114	
925040	83120	
925041	83122	89406
925041	89406	
925042	83123	89405
925042	89405	
925043	83124	89407
925043	89407	
925044	83125	
925045	83126	89430
925045	89430	
925046	83131	
925047	83134	
925048	83135	
925049	83136	
925050	83137	
925051	83140	
925052	83141	
925053	83142	
925054	83143	
925055	83147	
925057	83154	
925059	83159	
925060	83160	
925061	83162	
925063	83166	
925064	83169	
925065	83175	
925066	G63622	
925067	G63623	
925068	83180	
925069	83207	89407
925070	83209	89414
925070	89414	
925071	83215	
925072	83216	
925073	83219	
925074	83221	
925075	83225	
925076	83303	
925078	83308	
925078	89435	
925079	83309	
925080	83312	89409
925080	89409	
925081	83314	
925082	83317	
925083	83364	
925084	83391	
925085	83395	
925086	83400	
925088	83518	
925089	83519	
925090	83613	
925091	83901	
925093	83906	
925094	85001	89410
925094	89410	
925095	85004	
925096	85005	89430
925097	85006	
925098	85007	
925099	85009	
925100	85012	89413
925100	89413	
925101	85013	89414
925102	85014	
925103	85023	89415
925103	89415	
925104	85024	
925105	85026	
925106	85029	
925107	85030	89440
925107	89440	
925108	85031	
925109	85033	89427
925109	89427	
925110	85036	89405
925111	85043	
925112	85046	89434
925112	89434	
925113	85047	89435
925114	85054	
925115	85055	89439
925115	89439	
925116	85058	89431
925116	89431	
925118	85061	89450
925118	89450	
925119	85062	89408
925119	89408	
925120	85063	
925121	85065	
925122	85066	89448

COMPETITIVE & O.E.M. INTERCHANGE LIST
Lista de Intercambios contra Competidores y Equipo Original.
Liste d'interchange de produits compétitifs & d'équipement original (OEM)

925122	89448	
925123	85067	89451
925123	89451	
925124	85069	89455
925124	89455	
925125	85070	89459
925125	89459	
925126	85071	
925127	85072	
925128	85080	
925129	85081	
925130	85082	
925131	85084	89460
925131	89460	
925132	85086	
925133	85088	
925134	85090	
925135	85098	89502
925136	85102	
925137	85106	
925138	85109	
925139	85119	
925140	85122	
925142	85124	
925143	85125	
925145	85180	
925146	85181	
925148	85301	
925149	85302	89420
925149	89420	
925150	85303	89422
925150	89422	
925151	85304	
925152	85307	
925153	85308	89422
925154	85310	89423
925154	89423	
925155	85311	89424
925155	89424	
925156	85314	89425
925156	89425	
925157	85315	
925158	85316	89426
925158	89426	
925159	85319	89428
925159	89428	
925160	85320	89429
925160	89429	
925161	85329	
925162	85331	
925163	85335	
925165	85343	
925166	85376	
925167	85637	
925168	85639	
925169	85642	
925173	85716	
925174	85722	
925175	85724	89443
925175	89443	
925178	85900	
925179	85906	89407
925180	85909	
925181	85918	89449
925181	89449	
925182	85919	
925183	85920	89503
925183	89503	
925184	85926	
925185	85927	
925186	85928	
925187	85932	89453
925187	89453	
925188	85956	
925189	85958	
925190	85959	
925191	85965	
925192	85967	
925193	85976	
925194	89402	
925209	85736	
925210	85902	
925211	85921	
925212	85923	89458
925213	85924	89457
925213	89457	
925214	85931	89458
925214	89458	
925215	85933	89454
925215	89454	
925216	85936	89456
925216	89456	
925217	85937	
925218	85954	
925219	85957	
925220	85963	
925221	85964	
925222	85972	
925224	85985	
925225	85986	
925226	85988	
925227	85989	
925228	85994	
925229	85995	
925230	85998	
925231	83001	
925232	83003	
925233	83004	
925235	83006	
925236	83009	
925237	83010	
925238	83018	
925239	83019	
925241	83022	
925242	83031	
925243	83102	
925244	83105	
925245	83110	
925246	83111	
925247	83113	
925249	83119	
925250	83127	
925251	83128	89436
925252	83130	
925254	83144	
925255	83148	
925256	83149	

COMPETITIVE & O.E.M. INTERCHANGE LIST

Lista de Intercambios contra Competidores y Equipo Original.

Liste d'interchange de produits compétitifs & d'équipement original (OEM)

925257	83150	
925258	83158	
925259	83164	
925260	83168	
925261	83203	89436
925262	83214	
925264	83301	
925265	83318	
925266	83363	
925267	83389	89436
925267	89436	
925268	83401	
925269	83456	89447
925269	89447	
925270	83635	
925271	85000	89436
925272	85003	89411
925272	89411	
925273	85010	
925274	85027	
925274	89418	
925275	85040	
925276	85045	
925277	85051	
925278	85052	
925279	85053	89442
925279	89442	
925281	85064	
925282	85078	
925283	85079	
925284	85087	
925285	85120	
925286	85300	89419
925286	89419	
925287	85305	
925288	85318	
925289	85321	
925290	85322	
925291	85323	89436
925292	85332	
925293	85333	
925294	85334	

925295	85337	
925296	85338	
925297	85339	
925298	85340	
925299	85341	
925300	85344	
925301	85345	
925302	85351	
925303	85382	
925304	85638	
925306	85702	
925307	85704	
925308	85708	
925309	85709	
925310	85711	
925311	85712	
925314	85723	
925315	85727	
925316	85728	
925317	85729	
925318	85733	
925319	85734	
925321	89432	
925330	85737	
925331	85738	
925332	85739	
925333	85740	
925334	85901	
925336	85908	
925337	85910	
925338	85911	
925339	85916	89430
925340	85925	
925341	85929	
925342	85934	
925343	85935	
925344	85938	
925345	85939	
925346	85955	
925347	85961	
925348	85962	

925349	85970	
925353	87015	
925355	87018	
925363	83015	
925364	83026	
925365	83030	
925367	83034	
925368	83059	
925370	83118	
925371	83176	
925372	83204	
925373	83242	
925375	85042	
925376	85377	
925377	85700	
925378	85705	89447
925379	85732	
925380	89437	
925406	85979	
925607	83007	

RAM		
O.E.M #	Gabriel	Upgrade
05168284AC	85649	
05168295AB	85649	
05168296AA	85650	
6811 1104AB	85649	
6811 1104AB001	85649	
6811 1104AB-001	85649	
6811 1105AC	85649	
6811 1105AC001	85649	
6811 1105AC-001	85649	
6811 1107AA	85650	
6811 1107AA001	85650	
6811 1107AA-001	85650	

RAMERIZ TRAILER		
O.E.M #	Gabriel	Upgrade
1816501	85006	
18165-01	85006	

COMPETITIVE & O.E.M. INTERCHANGE LIST
Lista de Intercambios contra Competidores y Equipo Original.
Liste d'interchange de produits compétitifs & d'équipement original (OEM)

RAYDAN MANUFACTURING		
O.E.M #	Gabriel	Upgrade
14QK3100	85739	
14QK-3100	85739	
44651211	85739	
446-51-211	85739	
700115	85712	

RED LION TRAILER		
O.E.M #	Gabriel	Upgrade
90044978	85059	
90044989	85059	

RENEGADE RV		
O.E.M #	Gabriel	Upgrade
1013760000	85959	
10-13760-000	85959	
1013809000	85958	
10-13809-000	85958	
141700005838	85098	89502
1618708000	85724	89443
16-18708-000	85724	89443
20433424	85061	89450
20551628	85066	89448
20973993	85061	89450
21436086	85098	89502
21462380	85088	
471700000443	85066	89448
471700002991	85959	
471700003920	85958	
471700006040	85088	
SDA471700002809	85724	89443
SDA471700002991	85959	
SDA471700003920	85958	

REX MIXER		
O.E.M #	Gabriel	Upgrade
102-13441-10	646155	

REYCO SUSPENSION		
O.E.M #	Gabriel	Upgrade
1288501	85300	89419
12885-01	85300	89419
1288503	85300	89419
12885-03	85300	89419
1288601	85334	
12886-01	85334	
1288701	85013	89414
12887-01	85013	89414
1288702	85013	89414
12887-02	85013	89414
1623001	85702	
16230-01	85702	
1672501	83126	89430
16725-01	83126	89430
1682401	85006	
16824-01	85006	
1714201	85001	89410
17142-01	85001	89410
1714601	83209	89414
17146-01	83209	89414
1735801	83126	89430
17358-01	83126	89430
1740301	83122	89406
17403-01	83122	89406
1740801	85005	89430
17408-01	85005	89430
1779401	83215	
17794-01	83215	
1816301	83207	89407
18163-01	83207	89407
1816401	83122	89406
18164-01	83122	89406
1816501	85006	
18165-01	85006	
1816601	85704	
18166-01	85704	
1828601	89414	
18286-01	89414	
1880001	83203	89436
18800-01	83203	89436
1949501	83126	89430
19495-01	83126	89430
1962301	83123	89405
19623-01	83123	89405
1982401	85006	
19824-01	85006	
2012501	85030	89440
20125-01	85030	89440
2012601	89440	
20126-01	89440	
2012901	85007	
20129-01	85007	
20960-01	83204	
2131001	85307	
21310-01	85307	
2149701	85005	89430
21497-01	85005	89430
2206201	85007	
22062-01	85007	
2310601	89430	
23106-01	89430	
2352301	85086	
23523-01	85086	
2352401	85738	
23524-01	85738	
2355301	85938	
23553-01	85938	
2439201	85051	
24392-01	85051	
665519	89414	
665748	85086	
665813	85051	
665830	85045	
665833	85052	
671707	85323	89436
680551	85738	
680552	85938	
680700	85938	
70009801	83128	89436
700098-01	83128	89436
70009803	85052	
700098-03	85052	
701071-01	665937	
70213501	85045	
702135-01	85045	
70213601	85052	
702136-01	85052	
70220901	85014	
702209-01	85014	
70467201	85938	
704672-01	85938	

COMPETITIVE & O.E.M. INTERCHANGE LIST

Lista de Intercambios contra Competidores y Equipo Original.

Liste d'interchange de produits compétitifs & d'équipement original (OEM)

RIDEWELL CORP.		
O.E.M #	Gabriel	Upgrade
1250005	85901	
1250546B000	85006	
1250563B000	85000	89436
1250789B000	85014	
1252607B000	85702	
1253069B000	85005	89430
1254025B000	85712	
1254190B000	85302	89420
1265157B000	85712	
1265478B000	85736	
1266009B000	83130	
1267120B000	85734	
1267249B000	85712	
1267395B000	85302	89420
1270007	85045	
1270563B000	85000	89436
1270563B003	85934	
1270789B000	85014	
1275813B000	85704	
1275943B	85005	89430
1310002	665937	
1310004	665937	
1317570B001	646155	
57645	85005	89430
665198	85005	89430
665267	85029	
665526	85014	
680101	85702	
70654	85000	89436
901813	85712	
90-1813	85712	
AS 4025B	85712	
AS30698	85005	89430
AS3069B	85005	89430
AS546B	85006	
AS563B	83203	89436
AS575B	85005	89430
AS789B	85014	
AS789B000	85014	
S2607B	85702	
S4025B	85712	
S5477B	85307	
S5478B	85307	
S5813B	85704	
S5878B	83207	89407
S6009B	83203	89436
S7120B	85304	
S7172B	83207	89407
S7249B	85307	
S7365B	85305	

ROADMASTER (MONACO)		
O.E.M #	Gabriel	Upgrade
90045132	85909	
90045188	85910	

SABO		
O.E.M #	Gabriel	Upgrade
8901020	85300	89419
8901021	85320	89429
8901023	85066	89448
8901024	85314	89425
8901025	83128	89436
8901025	85000	89436
8901026	85064	
8901027	85310	89423
8901028	85316	89426
8901029	85319	89428
8901029	85724	89443
8901030	85323	89436
8901031	85900	
8901032	85901	
8901033	85918	89449
8901156	G63299	
890120	85300	89419
890414	85323	89436
890449	85300	89419
895315	83009	
895316	83002	

SACHS		
O.E.M #	Gabriel	Upgrade
101892	85708	
101968	85708	
106282	85722	
106884	85708	
106885	85722	
112885	85709	
124693	85708	
141700000373	85061	89450
141700000378	83160	
141700000380	85061	89450
141700000443	85066	89448
141700002626	85061	89450
141700005838	85098	89502
141700005839	85098	89502
141700131809	85029	
141700131810	83160	
141700131975	83160	
280499	85300	89419
290146	85012	89413
290460	85005	89430
290465	83125	
290488	85040	
311229	85918	89449
311230	85956	
311631	85906	89407
311632	85909	
311633	85900	
311634	85001	89410
311635	85030	89440
311793	85916	89430
312724	85311	89424
313709	85377	
315389	85090	
315390	85918	89449
315391	85956	
315392	85007	
315392	85329	
315393	85331	
315394	85921	
315395	85724	89443
315396	85335	
315397	83120	
315398	85058	89431
315399	85005	89430
315400	85006	
315401	85331	
315402	85900	
315403	85919	
315404	85900	
315406	85918	89449
315411	83128	89436
315412	85106	
315413	85932	89453

COMPETITIVE & O.E.M. INTERCHANGE LIST
Lista de Intercambios contra Competidores y Equipo Original.
Liste d'interchange de produits compétitifs & d'équipement original (OEM)

315414	85959	
315415	85933	89454
315416	85003	89411
315417	85923	89458
315417	85931	89458
315418	83456	89447
315420	85014	
315421	85088	
315422	85708	
315423	83127	
315424	85067	89451
315426	85007	
315427	85713	
315431	85014	
315432	83209	89414
315432	85013	89414
315434	85065	
315435	85088	
315536	85086	
315540	83613	
315541	85052	
315542	83122	89406
315542	85005	89430
315543	85734	
315544	83124	89407
315544	85014	
315545	85316	89426
315545	85333	
315546	85005	89430
315547	85924	89457
315548	85070	89459
315549	85033	89427
315550	85311	89424
315551	85310	89423
315552	83389	89436
315552	85000	89436
315553	85900	
315554	83125	
315555	83001	
315556	83215	
315558	85062	89408
315593	85029	
315594	85029	
315597	85959	
315598	85933	89454
315599	85109	
315600	85918	89449
315601	85959	
315603	83134	
315604	85053	89442
315606	85061	89450
315607	85098	89502
315608	85061	89450
315608	85066	89448
315609	85066	89448
315610	83026	
315611	85006	
315612	85006	
315613	85030	89440
315613	85909	
315614	83125	
315615	83027	
315616	83038	
315617	85918	89449
315618	83160	
315619	83160	
315620	85080	
315621	85080	
315622	85081	
315623	85918	89449
315624	85959	
315626	85933	89454
315654	85070	89459
315655	85937	
315656	83040	
315657	83039	
315659	83047	
315660	83009	
315661	85932	89453
315840	83126	89430
316 39	83215	
316302	83163	
316303	83136	
316305	83219	
316305	85023	89415
316306	85319	89428
316307	85036	89405
316308	85321	
316309	85901	
316310	85311	89424
316311	85047	89435
316312	83136	
316313	85061	89450
316314	85064	
316314	85938	
316316	85936	89456
316318	85045	
316318	85052	
316319	83130	
316320	85030	89440
316321	83317	
316322	85300	89419
316478	85331	
316485	85959	
316488	85919	
316490	85010	
316491	85013	89414
316493	85010	
316814	85026	
316815	85030	89440
316816	85012	89413
316817	85954	
316818	85046	89434
316819	85055	89439
316820	85012	89413
316821	83111	
316822	85978	
316823	85072	
316824	85069	89455
316825	83021	
316826	83031	
316827	83002	
316828	83041	
316829	83041	
316830	85051	
316831	85043	
316832	83120	
316833	83112	
316834	85058	89431
316835	83110	
316836	85055	89439
316837	83312	89409
316838	83309	
316839	83215	
316840	83126	89430
316840	85030	89440

COMPETITIVE & O.E.M. INTERCHANGE LIST

Lista de Intercambios contra Competidores y Equipo Original.

Liste d'interchange de produits compétitifs & d'équipement original (OEM)

316841	85303	89422
317529	83154	
317530	646155	
317531	83048	
317532	83051	
317533	85052	
317534	85084	89460
317534	85989	
317535	83008	
317536	85738	
317772	83029	
317773	85926	
317774	83122	89406
317776	83209	89414
317777	85925	
317778	83045	
317779	85045	
317779	85939	
317780	83030	
317781	83035	
317782	83207	89407
317783	85024	
317928	646177	
317929	83019	
317930	83025	
317931	83049	
317932	83101	
317933	83103	
317934	83123	89405
317935	83142	
317936	83144	
317936	85030	89440
317937	83148	
317938	85012	89413
317939	83314	
317940	85053	89442
317941	85302	89420
317943	85979	
317944	87015	
317945	83515	
317953	85301	
317955	632147	
317956	83025	

317957	83225	
317957	85007	
317958	83308	
317959	83400	
317960	85054	
317961	85338	
317962	85311	89424
317963	85740	
317964	85029	
317965	83163	
317966	G63183	
40A850	85708	
410009	83102	
410010	83317	
410021	83125	
410022	85006	
410024	85302	89420
410025	83215	
410026	85918	89449
410032	85001	89410
410035	85001	89410
410035	85337	
410036	85061	89450
410037	85081	
410040	85909	
410042	85310	89423
410043	85957	
410044	85031	
410046	83136	
410047	85071	
410048	85014	
410056	83389	89436
410056	85000	89436
410057	83137	
410057	85013	89414
410058	83122	89406
410068	85030	89440
410068	85054	
471700000426	85014	
471700000428	85006	
471700000431	85066	89448
471700000436	85030	89440
471700000440	85959	
471700000443	85066	89448

471700000445	85080	
471700000447	85919	
471700000449	85918	89449
471700000451	85080	
471700000458	85014	
471700000459	85030	89440
471700000461	89414	
471700000464	85090	
471700000466	85959	
471700000470	85918	89449
471700002627	85066	89448
471700002726	85918	89449
471700002727	85959	
471700002809	85724	89443
471700002861	85014	
471700002919	85106	
471700002990	85007	
471700002991	85959	
471700002992	85331	
471700002993	85921	
471700002994	83134	
471700002995	83134	
471700002996	85335	
471700003009	85006	
471700003011	85058	89431
471700003832	85933	89454
471700003920	85958	
471700004423	85109	
471700005079	85005	89430
471700006039	85088	
471700006040	85088	
471700006269	85932	89453
471700009646	85088	
471700009647	85088	
471700011530	85181	
471700011531	85180	
471700013186	85109	
471700014316	85061	89450
471700014318	85188	
471700131155	85918	89449
471700131256	85065	
471700131258	85081	
471700131331	85932	89453
471700131545	85006	

COMPETITIVE & O.E.M. INTERCHANGE LIST
Lista de Intercambios contra Competidores y Equipo Original.
Liste d'interchange de produits compétitifs & d'équipement original (OEM)

471700131646	85918	89449
471700131775	85006	
471700131778	85331	
471700131920	85933	89454
471700131921	85933	89454
471700131974	85029	
481700000207	85329	
481700000209	85713	
481700000477	85900	
481700000493	85900	
481700125969	85956	
481700131250	85377	
481700131438	85919	
481700131919	85900	
481700999376	85329	
481700999386	85376	
510001	85303	89422
510002	85302	89420
510003	85004	
510004	85307	
510005	85303	89422
510006	85705	89447
510017	85323	89436
510017	85738	
510018	85724	89443
510019	85916	89430
510023	85316	89426
814903003482	83040	
814903003483	83039	
814903003486	83047	
814903003496	83009	
814903003500	83026	
814903003501	83027	
814903003528	83038	

SAF HOLLAND		
O.E.M #	Gabriel	Upgrade
471700000436	85030	89440
471700000458	85014	
471700000459	85030	89440
471700000461	89414	
481700000483	89430	
481700000485	89430	
57639	85000	89436
57643	85013	89414

6025	83122	89406
6026	83204	
632155	646177	
646201	646177	
665002	85004	
665003	85300	89419
665197	85051	
665454	85045	
665514	83127	
665969	89430	
671921	85916	89430
671922	89405	
671923	89440	
671931	85916	89430
680234	85906	89407
680268	85323	89436
680645	85321	
90044001	85005	89430
90044008	85000	89436
90044011	85004	
90044012	85006	
90044016	85300	89419
90044017	83204	
90044025	83209	89414
90044046	83123	89405
90044071	85000	89436
90044081	85000	89436
90044086	85000	89436
90044089	83124	89407
90044089C	83124	89407
90044095	83203	89436
90044162	83128	89436
90044448	85051	
90044625	83125	
90044626	83126	89430
90044642	83127	
90044679	83122	89406
90044680	83125	
90044681	83204	
90044682	83209	89414
90044683	83122	89406
90044684	83124	89407
90044685	83389	89436
90044686	85051	
90044687	83125	
90044688	83122	89406
90044769	83207	89407

90044770	83207	89407
90044794	83127	
90044833	85052	
90044834	85052	
90044868	85045	
90044878	83635	
90044907	83635	
90044915	83127	
90044978	85059	
90044979	83113	
90044981	85000	89436
90044982	85000	89436
90044989	85059	
90044991	85000	89436
90044992	85000	89436
90045000	85906	89407
90045001	85323	89436
90045002	85906	89407
90045003	85323	89436
90045040	83130	
90045053	85908	
90045054	85051	
90045075	85911	
90045083	85910	
90045096	85916	89430
90045099	85906	89407
90045110	83137	
90045132	85909	
90045138	85910	
90045175	85916	89430
90045188	85910	
90045207	89405	
90045277	85030	89440
90045298	83363	
90045299	83389	89436
90045331	646155	
90045336	85014	
90045337	85911	
90045338	85060	
90045381	83150	
90045384	85916	89430
90045418	85916	89430
90045419	89405	
90045420	89440	
90045432	85321	

COMPETITIVE & O.E.M. INTERCHANGE LIST

Lista de Intercambios contra Competidores y Equipo Original.

Liste d'interchange de produits compétitifs & d'équipement original (OEM)

90045433	85916	89430
90045455	85909	
90045466	89406	
90045471	83150	
90045500	89430	
90045503	89430	
90045504	85030	89440
90045532	85030	89440
90045534	85014	
90045536	89414	
90045563	85014	
90045564	83128	89436
90045568	85060	
90045572	85045	
90045574	83130	
90045575	85051	
90045576	83150	
90045605	85109	
90045607	83150	
90045608	83363	
90045665	85029	
90045666	83130	
90045666	85051	
90045667	85060	
90045669	83389	89436
90045803	85109	
90045812	85109	
AR1008	85006	
AR-1008	85006	
AR1141	83204	
AR-1141	83204	
AR1141C	83204	
AR-1141-C	83204	
AR1202	85300	89419
AR-1202	85300	89419
AR134C	85005	89430
AR-134-C	85005	89430
AR1404	85301	
AR-1404	85301	
AR1425	85301	
AR-1425	85301	
AR1434	83203	89436
AR-1434	83203	89436
AR1654	83209	89414
AR-1654	83209	89414
AR1822	85304	
AR-1822	85304	
AR2451	83203	89436
AR-2451	83203	89436
AR2598	83123	89405
AR-2598	83123	89405
AR718C	83203	89436
AR-718-C	83203	89436
AR718CHD	85000	89436
AR-718-C-HD	85000	89436
AR781	83203	89436
AR-781	83203	89436
AR958	83207	89407
AR-958	83207	89407
AR995	85734	
AR-995	85734	
XBSPN05336	83125	
XB-SPN-053-36	83125	

SAFARI MOTOR COACH		
O.E.M #	Gabriel	Upgrade
B462092	83126	89430
B462092	85910	
B462093	85058	89431

SEAGRAVE FIRE APPARATUS LLC		
O.E.M #	Gabriel	Upgrade
680117	85300	89419
P0025500	85300	89419
P2598000	85712	

SHASTA RV		
O.E.M #	Gabriel	Upgrade
8C2418045DA	G63622	
8C24-18045-DA	G63622	
8C2418080DB	G63623	
8C24-18080-DB	G63623	
8C2Z18124D	G63622	
8C2Z-18124-D	G63622	
8C2Z18125D	G63623	
8C2Z-18125-D	G63623	
ASH1136	G63623	
ASH-1136	G63623	
ASH1154	G63622	
ASH-1154	G63622	
AT163G	G63622	
AT-163G	G63622	
AT164G	G63623	
AT-164G	G63623	

SICARD		
O.E.M #	Gabriel	Upgrade
3166657	85700	

SPARTAN MOTORS		
O.E.M #	Gabriel	Upgrade
0272SS5	85712	
0272-SS5	85712	
0346SS5	85013	89414
0346SS5	85030	89440
0346-SS5	85013	89414
0346-SS5	85030	89440
0377SS5	85029	
0377-SS5	85029	
1300B46	85029	
2131001	85307	
21310-01	85307	
2200201	85007	
471700000456	85959	
58913009	85959	
58913-009	85959	
58913009L	85959	
58913-009L	85959	
59011	83214	
60665014	85962	
60665-014	85962	
60665014L	85962	
60665-014L	85962	
60665-025	85036	89405
60665025L	85036	89405
60665-025L	85036	89405
78068	85304	
AS 4025B	85712	
B461593	85909	
B461594	85013	89414
B461594	85030	89440
B46-1594	85013	89414
B46-1594	85030	89440
B461725	85029	

COMPETITIVE & O.E.M. INTERCHANGE LIST
Lista de Intercambios contra Competidores y Equipo Original.
Liste d'interchange de produits compétitifs & d'équipement original (OEM)

B461725	85910	
B46-1725	85029	
B461731	85909	
B461732	85030	89440
B462150	85909	
B462151	85007	
B462151	85030	89440
B46-2151	85007	
B462385	85030	89440
B462502	85013	89414
B462502	85030	89440
S2607B	85702	

SPRING VALLEY		
O.E.M #	Gabriel	Upgrade
632155	646177	

STARCRAFT BUS CO.		
O.E.M #	Gabriel	Upgrade
3578858C1	85926	
3578858C2	85926	
3584116C1	83175	
3584116C2	83175	
3584118C2	85928	
471700011530	85181	
471700011531	85180	
4C4Z18124JB	85928	
4C4Z-18124-JB	85928	
4C4Z18124QA	83175	
4C4Z-18124-QA	83175	
4C4Z18124RA	85928	
4C4Z-18124-RA	85928	
4C4Z18125B	83317	
4C4Z-18125-B	83317	
4C4Z18125DA	85926	
4C4Z-18125-DA	85926	
501906C92	83317	
AA616	83175	
AA-616	83175	
AA617	85928	
AA-617	85928	
ASH-1136	G63623	
ASH-1154	G63622	

ASH24658	85181	
ASH-24658	85181	
ASH24659	85181	
ASH-24659	85181	
ASH24660	85180	
ASH-24660	85180	
ASH24661	83317	
AT812	85928	
AT-812	85928	
FC4418045BB	85181	
FC44-18045-BB	85181	
FC4418080AB	85180	
FC44-18080-AB	85180	
FC4Z18124A	85181	
FC4Z-18124-A	85181	
FC4Z18124B	85181	
FC4Z-18124-B	85181	
FC4Z18125A	85180	
FC4Z-18125-A	85180	

STERLING TRUCK		
O.E.M #	Gabriel	Upgrade
05168284AC	85649	
05168295AB	85649	
05168296AA	85650	
1012388000	85920	89503
10-12388-000	85920	89503
1012390000	85920	89503
10-12390-000	85920	89503
1013205000	85918	89449
10-13205-000	85918	89449
12021043	83025	
1202-1043	83025	
1613957000	85724	89443
16-13957-000	85724	89443
1615770000	85956	
16-15770-000	85956	
1615817000	85724	89443
16-15817-000	85724	89443
1845067000	83034	
18-45067-000	83034	
471700131331	85932	89453
471700131646	85918	89449
4790228	85013	89414
47902-28	85013	89414

481700125969	85956	
4C4Z18124N	85957	
4C4Z-18124-N	85957	
4C4Z18125DA	85926	
4C4Z-18125-DA	85926	
572412	83109	
57241-2	83109	
58913003	85932	89453
58913-003	85932	89453
58913003L	85932	89453
58913-003L	85932	89453
6803230300	85006	
6803260000	83120	
680339	85724	89443
680611	85724	89443
6811 1104AB	85649	
6811 1104AB001	85649	
6811 1104AB-001	85649	
6811 1105AC	85649	
6811 1105AC001	85649	
6811 1105AC-001	85649	
6811 1107AA	85650	
6811 1107AA001	85650	
6811 1107AA-001	85650	
6E7Z18125A	83364	
6E7Z-18125-A	83364	
90045099	85906	89407
AT560	G63809	
AT-560	G63809	
AX267A	83309	
AX-267A	83309	
AX310	83215	
AX-310	83215	
C4HZ18124E	83309	
C4HZ-18124-E	83309	
C4TZ18124AB	83308	
C4TZ-18124-AB	83308	
D8HZ18124A	85301	
D8HZ-18124-A	85301	
E6HZ18124A	85301	
E6HZ-18124-A	85301	
E6HZ18124D	85301	

COMPETITIVE & O.E.M. INTERCHANGE LIST

Lista de Intercambios contra Competidores y Equipo Original.

Liste d'interchange de produits compétitifs & d'équipement original (OEM)

E6HZ-18124-D	85301	
E6HZ18125D	83215	
E6HZ-18125-D	83215	
E7HZ18124A	85301	
E7HZ-18124-A	85301	
E7XZ18124A	G63386	
E7XZ-18124-A	G63386	
E7XZ18125B	G63387	
E7XZ-18125-B	G63387	
E9HZ18124A	83309	
E9HZ-18124-A	83309	
F0HZ18124B	85006	
F0HZ-18124-B	85006	
F1HZ18124A	83309	
F1HZ-18124-A	83309	
F1HZ18124B	83308	
F1HZ-18124-B	83308	
F1HZ18124D	85006	
F1HZ-18124-D	85006	
F1HZ18124E	85006	
F1HZ-18124-E	85006	
F1HZ18124H	85040	
F1HZ-18124-H	85040	
F1HZ18124J	83308	
F1HZ-18124-J	83308	
F1HZ18124K	89402	
F1HZ-18124-K	89402	
F2HZ18124A	85376	
F2HZ-18124-A	85376	
F2HZ18124B	85301	
F2HZ-18124-B	85301	
F4HT18080AB	85314	89425
F4HT-18080-AB	85314	89425
F4HT18080BA	85001	89410
F4HT-18080-BA	85001	89410
F5HZ18124A	83314	
F5HZ-18124-A	83314	
F5HZ18124B	83107	
F5HZ-18124-B	83107	
F5HZ18124C	85063	
F5HZ-18124-C	85063	

F5HZ18124D	83125	
F5HZ-18124-D	83125	
F5HZ18125A	85314	89425
F5HZ-18125-A	85314	89425
F5HZ18125B	85001	89410
F5HZ-18125-B	85001	89410
F6HT18045AA	85054	
F6HT-18045-AA	85054	
F6HT18045AC	85054	
F6HT-18045-AC	85054	
F6HT18045BC	85047	89435
F6HT-18045-BC	85047	89435
F6HT18045CC	85055	89439
F6HT-18045-CC	85055	89439
F6HT18045EB	85055	89439
F6HT-18045-EB	85055	89439
F6HT18045EC	85055	89439
F6HT-18045-EC	85055	89439
F6HT18045GB	85030	89440
F6HT-18045-GB	85030	89440
F6HT18045GC	85030	89440
F6HT-18045-GC	85030	89440
F6HT18045HB	85054	
F6HT-18045-HB	85054	
F6HT18045HC	85054	
F6HT-18045-HC	85054	
F6HT18045JB	89402	
F6HT-18045-JB	89402	
F6HT18045JC	89402	
F6HT-18045-JC	89402	
F6HT18045KA	89402	
F6HT-18045-KA	89402	
F6HT18045LA	85376	
F6HT-18045-LA	85376	
F6HT18080B	83109	
F6HT-18080-B	83109	
F6HT18080CA	85314	89425
F6HT-18080-CA	85314	89425
F6HT18080DA	83109	
F6HT-18080-DA	83109	
F6HT18080EA	85906	89407
F6HT-18080-EA	85906	89407
F6HT18080FC	85013	89414
F6HT-18080-FC	85013	89414
F6HT18124JC	89402	
F6HT-18124-JC	89402	

F6HT18124KA	89402	
F6HT-18124-KA	89402	
F6HZ18124A	85054	
F6HZ-18124-A	85054	
F6HZ18124B	83308	
F6HZ-18124-B	83308	
F6HZ18124C	85055	89439
F6HZ-18124-C	85055	89439
F6HZ18124D	85055	89439
F6HZ-18124-D	85055	89439
F6HZ18124E	85055	89439
F6HZ-18124-E	85055	89439
F6HZ18124F	85055	89439
F6HZ-18124-F	85055	89439
F6HZ18124G	85054	
F6HZ-18124-G	85054	
F6HZ18124H	85054	
F6HZ-18124-H	85054	
F6HZ18124J	89402	
F6HZ-18124-J	89402	
F6HZ18125B	83109	
F6HZ-18125-B	83109	
F6HZ18125D	85013	89414
F6HZ-18125-D	85013	89414
F6HZ5K407AB	83034	
F6HZ-5K407-AB	83034	
F81A18045AGB	G63809	
F81A-18045-AGB	G63809	
XC4518045AA	83216	
XC45-18045-AA	83216	
XC4518080BA	85724	89443
XC45-18080-BA	85724	89443

STOUGHTON TRAILERS INC.		
O.E.M #	Gabriel	Upgrade
HTA20001	83389	89436
HTA20002	85000	89436
NW90044162	83128	89436
NW90044448	85051	
NW90044978	85059	
NW90044979	83113	
RT1816501	85006	
RT18165-01	85006	

COMPETITIVE & O.E.M. INTERCHANGE LIST
Lista de Intercambios contra Competidores y Equipo Original.
Liste d'interchange de produits compétitifs & d'équipement original (OEM)

SUSPENSIONS INC.		
O.E.M #	Gabriel	Upgrade
200188	646155	

SUSPENSYS		
O.E.M #	Gabriel	Upgrade
218004872	85737	

TEREX CORP.		
O.E.M #	Gabriel	Upgrade
12111	646155	

THE BINKLEY COMPANY		
O.E.M #	Gabriel	Upgrade
16965	85006	
6898	83125	

THOMAS SCHOOL BUS		
O.E.M #	Gabriel	Upgrade
00614966	85307	
1013211000	85918	89449
10-13211-000	85918	89449
1013634000	85918	89449
10-13634-000	85918	89449
128745	83102	
1615817000	85724	89443
16-15817-000	85724	89443
1618708000	85724	89443
16-18708-000	85724	89443
1618713000	85122	
16-18713-000	85122	
1619138000	85058	89431
16-19138-000	85058	89431
3000614966	85307	
300-0614966	85307	
471700003070	85122	
471700131545	85006	
60670006	83147	
60670-006	83147	
60670006L	83147	
60670-006L	83147	
60998001	85006	
60998-001	85006	
60998003	85006	
60998-003	85006	
61300112	83613	
61300114	89437	
6130-0114	89437	
61300219	85014	
61300222	85014	
61300223	85014	
61300224	85918	89449
61300240	85918	89449
61300285	83102	
6130029	85712	
61310101	85736	
61310102	85308	89422
61310103	85308	89422
61310104	85713	
61310232	85000	89436
61310434	85724	89443
61310478	85724	89443
614974	85304	
630001	85713	
63-0001	85713	
651442	83102	
659287	83102	
680010	85304	
680054	85307	
680088	85713	
680102	85712	
6803230300	85006	
680-323-0300	85006	
6803260000	83120	
680-326-0000	83120	
70445	85014	
728802	85736	
87002	85736	
8C24-18045-DA	G63622	
8C24-18080-DB	G63623	
8C2Z-18124-D	G63622	
8C2Z-18125-D	G63623	
90045504	85030	89440
A4890	85712	
A-4890	85712	
ASH-1136	G63623	
ASH-1154	G63622	
AT-163G	G63622	
AT-164G	G63623	
GBL651442	83102	
GBL654725	83120	
GBL665538	85006	

THOR MOTOR COACH		
O.E.M #	Gabriel	Upgrade
141700131809	85029	
141700131810	83160	
1616736000	85029	
16-16736-000	85029	
1616737000	83160	
16-16737-000	83160	
1616873000	85029	
16-16873-000	85029	
1616874000	83160	
16-16874-000	83160	
1618103000	85900	
16-18103-000	85900	
481700000493	85900	
ASH-1136	G63623	
ASH-1154	G63622	
ASH-1229	83209	89414
ASH-25822	83209	89414
ASH-25823	83209	89414
ASH25824	83122	89406
ASH-25824	83122	89406

TIFFIN MOTORHOMES INC.		
O.E.M #	Gabriel	Upgrade
58913009	85959	
58913-009	85959	
58913009L	85959	
58913-009L	85959	

TIMBREN INDUSTRIES		
O.E.M #	Gabriel	Upgrade
665804	85939	

TRAILMOBILE CANADA CORP.		
O.E.M #	Gabriel	Upgrade
434235	85051	
43-4-235	85051	
434236	85029	

COMPETITIVE & O.E.M. INTERCHANGE LIST

Lista de Intercambios contra Competidores y Equipo Original.

Liste d'interchange de produits compétitifs & d'équipement original (OEM)

43-4-236	85029	
434237	85000	89436
43-4-237	85000	89436
434239	83207	89407
43-4-239	83207	89407
434241	85006	
43-4-241	85006	
434277	85000	89436
43-4-277	85000	89436
434278	85059	
43-4-278	85059	
434279	83204	
43-4-279	83204	
436028	85000	89436
43-6-028	85000	89436
436118	85000	89436
43-6-118	85000	89436
436137	85006	
43-6-137	85006	
436158	85013	89414
43-6-158	85013	89414
436164	83207	89407
43-6-164	83207	89407
438002	83209	89414
43-8-002	83209	89414
438011	83207	89407
43-8-011	83207	89407
438013	85000	89436
43-8-013	85000	89436
438014	85013	89414
43-8-014	85013	89414
438015	85006	
43-8-015	85006	
438022	83225	
43-8-022	83225	
438031	85029	
43-8-031	85029	
90044089	83124	89407
90044625	83125	
90044642	83127	
90044978	85059	
90044979	83113	
90044992	85000	89436
90045054	85051	
A2212	85029	
A-2212	85029	

TRANSPORTATION MFG CORP.		
O.E.M #	Gabriel	Upgrade
12056000	85711	
12-05-6000	85711	
12056002	85339	
12-05-6002	85339	
12056033	85339	
12-05-6033	85339	
12G51	85700	
12G-5-1	85700	
12J510	85733	
12J-5-10	85733	
12J52	85312	
12J-5-2	85312	
12J54	85312	
12J-5-4	85312	
12J59	85700	
12J-5-9	85700	
12L569	85700	
12L-5-69	85700	
12L570	85700	
12L-5-70	85700	
12L599	85339	
12L-5-99	85339	
12T113	85303	89422
12T-1-13	85303	89422
12TA0113	85303	89422
12TA-01-13	85303	89422
22045526	85702	
22052014	85702	
680349	85702	
680470	85713	
G1011822	85702	
G1101590	85713	

TRP		
O.E.M #	Gabriel	Upgrade
89402GSK	89402	
89405GSK	89405	
89406GSK	89406	
89407GSK	89407	
89408GSK	89408	
89409GSK	89409	
89410GSK	89410	
89411GSK	89411	
89413GSK	89413	
89414GSK	89414	
89415GSK	89415	
89418GSK	89418	
89419GSK	89419	
89420GSK	89420	
89422GSK	89422	
89423GSK	89423	
89424GSK	89424	
89426GSK	89426	
89427GSK	89427	
89428GSK	89428	
89429GSK	89429	
89430GSK	89430	
89431GSK	89431	
89432GSK	89432	
89434GSK	89434	
89435GSK	89435	
89436GSK	89436	
89437GSK	89437	
89439GSK	89439	
89440GSK	89440	
89442GSK	89442	
89443GSK	89443	
89448GSK	89448	
89449GSK	89449	
89450GSK	89450	
89451GSK	89451	
89456GSK	89456	
89459GSK	89459	
HS 646155	646155	
HS 727603	83203	89436
HS 727607	83207	89407
HS 83008	83008	
HS 83009	83009	
HS 83038	83038	
HS 83125	83125	
HS 83128	83128	89436

COMPETITIVE & O.E.M. INTERCHANGE LIST

Lista de Intercambios contra Competidores y Equipo Original.

Liste d'interchange de produits compétitifs & d'équipement original (OEM)

HS 83147	83147	
HS 85000	85000	89436
HS 85001	85001	89410
HS 85003	85003	89411
HS 85005	85005	89430
HS 85006	85006	
HS 85012	85012	89413
HS 85029	85029	
HS 85033	85033	89427
HS 85047	85047	89435
HS 85052	85052	
HS 85058	85058	89431
HS 85061	85061	89450
HS 85062	85062	89408
HS 85066	85066	89448
HS 85067	85067	89451
HS 85069	85069	89455
HS 85070	85070	89459
HS 85088	85088	
HS 85098	85098	89502
HS 85310	85310	89423
HS 85311	85311	89424
HS 85320	85320	89429
HS 85323	85323	89436
HS 85724	85724	89443
HS 85738	85738	
HS 85900	85900	
HS 85918	85918	89449
HS 85919	85919	
HS 85920	85920	89503
HS 85924	85924	89457
HS 85931	85931	89458
HS 85933	85933	89454
HS 85934	85934	
HS 85936	85936	89456
HS 85938	85938	
HS 85954	85954	
HS 85958	85958	

TRUCKMASTER		
O.E.M #	Gabriel	Upgrade
665632	85013	89414
665633	85033	89427
665783	83123	89405
665784	83122	89406
665785	83137	
665844	85069	89455
665918	85900	
665926	85047	89435
665927	85901	
665928	85062	89408
665930	85001	89410
665931	83312	89409
665932	85012	89413
665950	85902	
671052	85070	89459
671654	85936	89456
671699	85937	
671794	85067	89451
680237	85303	89422
680239	85310	89423
680240	85302	89420
680241	85311	89424
680242	85308	89422
680243	85001	89410
680253	85314	89425
680261	85062	89408
680279	83209	89414
680280	85906	89407
680281	85003	89411
680283	85740	
680303	85007	
680348	85012	89413
680385	85311	89424
680425	85320	89429
680435	85033	89427
680473	85319	89428
680586	85311	89424
680601	85012	89413

TURTLETOP BUS		
O.E.M #	Gabriel	Upgrade
ASH-1136	G63623	
ASH-1154	G63622	

TUTHILL TECHNOLOGIES		
O.E.M #	Gabriel	Upgrade
1085	83214	
1288501	85300	89419
12885-01	85300	89419
1288503	85300	89419
12885-03	85300	89419
1288701	85013	89414
12887-01	85013	89414
1288702	85013	89414
12887-02	85013	89414
1623001	85702	
16230-01	85702	
1672501	83126	89430
16725-01	83126	89430
1682401	85006	
16824-01	85006	
1714201	85001	89410
17142-01	85001	89410
1714601	83209	89414
17146-01	83209	89414
1735801	83126	89430
17358-01	83126	89430
1740301	83122	89406
17403-01	83122	89406
1740801	85005	89430
17408-01	85005	89430
1779401	83215	
17794-01	83215	
1816301	83207	89407
18163-01	83207	89407
1816401	83122	89406
18164-01	83122	89406
1816501	85006	
18165-01	85006	
1816601	85704	
18166-01	85704	
1828601	89414	
18286-01	89414	
1880001	83203	89436
18800-01	83203	89436
1949501	83126	89430
19495-01	83126	89430
1962301	83123	89405
19623-01	83123	89405
1982401	85006	
19824-01	85006	
2012501	85030	89440
20125-01	85030	89440
2012601	89440	
20126-01	89440	
2012901	85007	
20129-01	85007	
2096001	83204	
20960-01	83204	
2149701	85005	89430
21497-01	85005	89430
2352401	85738	
23524-01	85738	
2355301	85938	
23553-01	85938	
2439201	85051	

COMPETITIVE & O.E.M. INTERCHANGE LIST

Lista de Intercambios contra Competidores y Equipo Original.

Liste d'interchange de produits compétitifs & d'équipement original (OEM)

24392-01	85051	
2697	85712	
66502	646155	
680162	85300	89419
70213501	85045	
702135-01	85045	
70213601	85052	
702136-01	85052	
70220901	85014	
702209-01	85014	
OE12425	83214	

TWIN COACH		
O.E.M #	Gabriel	Upgrade
90044089	83124	89407
90044089C	83124	89407
90044162	83128	89436
AR718CHD	85000	89436
AR-718-C-HD	85000	89436
AR958	83207	89407
AR-958	83207	89407

UD		
O.E.M #	Gabriel	Upgrade
561000T825	83515	
56101Z5014	83162	
56101-Z5014	83162	
56101Z5017	83162	
56101-Z5017	83162	
56110Z5014	83162	
56110-Z5014	83162	
56110Z5017	83162	
56110-Z5017	83162	
E61000T825	83515	

UNITED MANUFACTURING		
O.E.M #	Gabriel	Upgrade
K9641	85304	
K-96-41	85304	

UNIVERSAL COACH		
O.E.M #	Gabriel	Upgrade
12051199	85729	
12-05-1199	85729	
680777	85729	

UPS TRUCK		
O.E.M #	Gabriel	Upgrade
P117099	83120	
P117146	83118	

UTILITY TRAILER MANUFACTURING COMP.		
O.E.M #	Gabriel	Upgrade
B23361	85911	
B-23361	85911	
B23566	85000	89436
B-23566	85000	89436
B23651	85045	
B-23651	85045	
B24023	85738	
B-24023	85738	
B24088	83389	89436
B24088	85000	89436
B-24088	83389	89436
B-24088	85000	89436
B24125	85323	89436
B-24125	85323	89436
B24579	85939	
B-24579	85939	
B25515	85338	
B-25515	85338	
S24088	83389	89436
S24088	85000	89436
S-24088	83389	89436
S-24088	85000	89436

VAN HOOL		
O.E.M #	Gabriel	Upgrade
624313790	85708	
6243-13790	85708	
624314040	85708	
6243-14040	85708	
665562	85708	
665563	85708	

VOLVO		
O.E.M #	Gabriel	Upgrade
027005976	83400	
02-7005976	83400	
027005977	83400	
02-7005977	83400	
031106460	85005	89430
03-1106460	85005	89430
1091347	83125	
1091348	83122	89406
1091349	83204	
1091350	83207	89407
1091351	83209	89414
1091353	83215	
1091354	83216	
1091357	83219	
1091358	83456	89447
1091359	83123	89405
1091360	83303	
1091362	83309	
1091363	83221	
1091364	83312	89409
1091365	83400	
1091366	83401	
1091367	85000	89436
1091368	85003	89411
1091370	85006	
1091371	85300	89419
1091372	85301	
1091373	85302	89420
1091374	85303	89422
1091375	85304	
1091376	85305	
1091377	85307	
1091378	85308	89422
1091379	85310	89423
1093100	85027	
1093176	85024	
1093178	85026	
1093180	85030	89440
12010012	83023	
1201-0012	83023	
12020012	83023	
1202-0012	83023	
12020032	83016	
1202-0032	83016	
141700000373	85061	89450
141700005838	85098	89502
1505190	85722	
1591501	85722	
1593843	83215	
1716824	85304	

COMPETITIVE & O.E.M. INTERCHANGE LIST

Lista de Intercambios contra Competidores y Equipo Original.

Liste d'interchange de produits compétitifs & d'équipement original (OEM)

19501669	85339	
19502711	85702	
19506846	85339	
20353932	85081	
20414440	85081	
20433424	85061	89450
20433425	85066	89448
20433426	85081	
20433427	85065	
20434880	85081	
20469001	85933	89454
20469002	85933	89454
20485632	85933	89454
20485633	85933	89454
20496215	83048	
20496217	83029	
20513881	85061	89450
20551628	85066	89448
20704334	83048	
20707753	85030	89440
20721254	83048	
20782199	85072	
20863239	85080	
20874147	83050	
20973993	85061	89450
21137330	85933	89454
21368411	83905	
21368413	83048	
21391412	83048	
21436086	85098	89502
21462378	85088	
21462380	85088	
22012065	85304	
22046483	85304	
22052336	85304	
22662125	83048	
22662224	83048	
22662230	83905	
22662235	83905	
22662237	83905	
22866844	83048	
23159761	85188	
23159763	85188	
23288402	85061	89450
23288403	85061	89450
25624698	83041	
25624730	85005	89430
25625008	83019	
2562558	85060	
3082284	83400	
3092842	85061	89450
3130140	85315	
3171696	85307	
3172948	85303	89422
3199937	85316	89426
3199938	85030	89440
3199939	85058	89431
3199940	85005	89430
3199941	85006	
3199942	89402	
3199943	85012	89413
3199944	85006	
3199945	85027	
3199946	85033	89427
3199947	85013	89414
3199948	85311	89424
3199949	85310	89423
3199950	85023	89415
3199951	85024	
3199952	85736	
3199953	85319	89428
3199954	85003	89411
3199955	85300	89419
3199956	85036	89405
3199957	83122	89406
3199959	85323	89436
3199960	85322	
3199961	85307	
3199962	85314	89425
3199963	85315	
3199965	85736	
3199966	85303	89422
3199967	85302	89420
3199968	85308	89422
3199972	85320	89429
3199973	85722	
3199974	85712	
3199975	85700	
3199976	85711	
3199977	85711	
3199978	85712	
3199979	85702	
3199980	85310	89423
3199983	85704	
3199984	85314	89425
3199985	85723	
3199986	85318	
3199987	85705	89447
3199988	85311	89424
3199989	85709	
3199990	85003	89411
3199991	85708	
3199992	85733	
3199993	85712	
3199994	85308	89422
359010001	83209	89414
35901-0001	83209	89414
359010003	85301	
35901-0003	85301	
359010004	83219	
35901-0004	83219	
359010005	83219	
35901-0005	83219	
359010008	85060	
35901-0008	85060	
359010011	83123	89405
35901-0011	83123	89405
359010017	83314	
35901-0017	83314	
359010022	83635	
35901-0022	83635	
359013201	85024	
35901-3201	85024	
359013406	85305	
35901-3406	85305	
359013409	85304	
35901-3409	85304	
359013410	85307	
35901-3410	85307	
359013413	85006	
35901-3413	85006	
359013420	85303	89422
35901-3420	85303	89422
370015	83401	

COMPETITIVE & O.E.M. INTERCHANGE LIST

Lista de Intercambios contra Competidores y Equipo Original.

Liste d'interchange de produits compétitifs & d'équipement original (OEM)

37001-5	83401	
373010001	85013	89414
37301-0001	85013	89414
373010008	83400	
37301-0008	83400	
373010016	85026	
37301-0016	85026	
373010018	85005	89430
37301-0018	85005	89430
373010021	85026	
37301-0021	85026	
373013201	85027	
37301-3201	85027	
373013202	85026	
37301-3202	85026	
3915917	85319	89428
3915947	85001	89410
3915948	85311	89424
3916352	85013	89414
3919055	85007	
3919056	83203	89436
3919057	83225	
3919526	83314	
3919561	85314	89425
3919565	83103	
3919567	83613	
3919569	85052	
3919570	83128	89436
3919571	83635	
3919572	83130	
3919573	83123	89405
3919574	85006	
3919575	83120	
3919582	83215	
3919585	83209	89414
3919587	83105	
3919588	83216	
3919589	85026	
3919591	83515	
3919592	85024	
3919593	83242	
3919594	85003	89411
3919598	83312	89409
3919900	85012	89413
3919901	83103	
3919902	83126	89430
3919903	83216	
3919904	G63183	
3919906	83308	
3919907	83309	
3919909	G63605	
3919910	83221	
3919911	83124	89407
3919912	83215	
3919913	83203	89436
3919914	83209	89414
3919915	83127	
3919916	83126	89430
3919917	83125	
3919918	83401	
3919919	G63625	
3919920	83303	
3919921	83123	89405
3919922	83318	
3919923	83301	
3919924	83456	89447
3919925	83317	
3919926	G63403	
3919927	83101	
3919928	83225	
3919931	83126	89430
3919932	85062	89408
3919933	85001	89410
3919934	85320	89429
3919935	85026	
3919936	83207	89407
3919937	85316	89426
3919938	85030	89440
3919939	85058	89431
3919940	85005	89430
3919941	85006	
3919942	89402	
3919943	85012	89413
3919944	85036	89405
3919945	85027	
3919946	85033	89427
3919947	85013	89414
3919948	85311	89424
3919949	85310	89423
3919950	83219	
3919951	83309	
3919952	85736	
3919953	85319	89428
3919954	85003	89411
3919955	85300	89419
3919956	85036	89405
3919957	83122	89406
3919958	85046	89434
3919959	85000	89436
3919960	85322	
3919961	85302	89420
3919962	85700	
3919964	85304	
3919965	85702	
3919966	85736	
3919967	85302	89420
3919968	85736	
3919972	85320	89429
3919973	85956	
3919974	85712	
3919975	85700	
3919976	85033	89427
3919977	85033	89427
3919978	85702	
3919979	85702	
3919980	85702	
3919983	85704	
3919984	85700	
3919985	85723	
3919988	85311	89424
3919989	85709	
3919990	85003	89411
3919991	85708	
3919992	85733	
3919993	85712	
3919994	85310	89423
3945808	89407	
3945809	89410	
3945810	89420	
3945811	89409	
3945812	89423	
3945813	89428	
3945814	89424	
3945815	89406	
3945816	89430	

COMPETITIVE & O.E.M. INTERCHANGE LIST
Lista de Intercambios contra Competidores y Equipo Original.
Liste d'interchange de produits compétitifs & d'équipement original (OEM)

3945817	89422	
3945818	89415	
3945819	89411	
3945820	89413	
3945821	89419	
3945842	83009	
3946210	83103	
3946217	83125	
3946219	83400	
3946239	85724	89443
3949240	85047	89435
3949241	85061	89450
3953643	85040	
3971703	83112	
3972662	85976	
471700000443	85066	89448
471700002627	85066	89448
471700003832	85933	89454
471700004423	85109	
471700006038	85088	
471700006040	85088	
471700013186	85109	
471700014316	85061	89450
471700014318	85188	
471700131256	85065	
471700131258	85081	
471700131920	85933	89454
471700131921	85933	89454
4790224	83137	
47902-24	83137	
4940640	83216	
494660	83219	
494-660	83219	
4975479	83400	
4975480	83400	
4975549	83216	
530596	85308	89422
5322338	83214	
5513989	83216	
5531435	85307	
5531436	85307	
5531437	85307	
5534430	85303	89422
5534447	85303	89422
5549899	83207	89407
5549925	85304	
5554959	83401	
572413	83112	
57241-3	83112	
60657007	85072	
60657-007	85072	
60675001	85978	
60675-001	85978	
60675001L	85978	
60675-001L	85978	
60680003	83112	
60680-003	83112	
60680003L	83112	
60680-003L	83112	
60680004	83143	
60680-004	83143	
60680004L	83143	
60680-004L	83143	
60680005	83142	
60680-005	83142	
60680005L	83142	
60680-005L	83142	
629398	85307	
629501	85307	
635869	83004	
646220	85734	
64838001	85933	89454
64838-001	85933	89454
64838002	85933	89454
64838-002	85933	89454
64838003	85933	89454
64838-003	85933	89454
64838003L	85933	89454
64838-003L	85933	89454
660100007	83004	
66010-0007	83004	
660100008	83004	
66010-0008	83004	
66221140I	83215	
665410	85027	
665539	85026	
665607	85047	89435
665623	85046	89434
665739	85047	89435
668302	83216	
676081	83401	
676082	83401	
6771501	85040	
6772218	85040	
6775411	85040	
6775412	85040	
6790756	83215	
6794358	85040	
6857668	83105	
6876828	83105	
70042	85302	89420
8026658	85046	89434
8056892	85023	89415
8060026	85065	
8065787	85026	
8071524	85024	
8071881	85061	89450
8073212	85065	
8075257	85065	
8075287	85065	
8077874	85047	89435
8077874P01	85047	89435
8077874-P01	85047	89435
8078195	85061	89450
8078546	83028	
8078547	83029	
8083872	85978	
8086053	85047	89435
8086651	85066	89448
8162662	83004	
8168617	83030	
8169859	85047	89435
8174749	85906	89407
83176191	83019	
83176192	83041	
83176193	83045	
83176194	83048	
83176195	83103	
83176196	83110	
83176197	83111	

COMPETITIVE & O.E.M. INTERCHANGE LIST

Lista de Intercambios contra Competidores y Equipo Original.

Liste d'interchange de produits compétitifs & d'équipement original (OEM)

83176198	83112	
83176199	83123	89405
83176200	83124	89407
83176201	83125	
83176202	83126	89430
83176203	83127	
83176204	83128	89436
83176205	83136	
83176206	83148	
83176207	83203	89436
83176208	83209	89414
83176209	83215	
83176210	83216	
83176211	85000	89436
83176212	85001	89410
83176213	85003	89411
83176214	85005	89430
83176215	85023	89415
83176216	85026	
83176217	85033	89427
83176218	85036	89405
83176219	85045	
83176220	85046	89434
83176221	85047	89435
83176222	85052	
83176223	85061	89450
83176224	85062	89408
83176225	85066	89448
83176226	85067	89451
83176227	85069	89455
83176228	85070	89459
83176229	85303	89422
83176230	85310	89423
83176231	85311	89424
83176232	85320	89429
83176233	85321	
83176234	85323	89436
83176235	85724	89443
83176236	85900	
83176237	85916	89430
83176238	85918	89449
83176239	85933	89454
83176240	646155	
85104186	85006	
85104221	85066	89448
85105667	83128	89436
85106580	85918	89449
85107095	83009	
85107238	85976	
85134402	85061	89450
85137234	83125	
85137420	85000	89436
90045605	85109	
90045803	85109	
90045812	85109	
ASH24446	83215	
ASH-24446	83215	
AX310	83215	
AX-310	83215	
D7HT18080AA	83215	
D7HT-18080-AA	83215	
D7HT18080DA	83215	
D7HT-18080-DA	83215	
E0HT18080AA	83215	
E0HT-18080-AA	83215	
RC SA3041	83041	
RC SA3045	83045	
RC SA3048	83048	
RC SA3103	83103	
RC SA3111	83111	
RC SA3112	83112	
RC SA3124	83124	89407
RC SA3125	83125	
RC SA3127	83127	
RC SA3128	83128	89436
RC SA3136	83136	
RC SA3148	83148	
RC SA3203	83203	89436
RC SA3216	83216	
RC SA5000	85000	89436
RC SA5001	85001	89410
RC SA5003	85003	89411
RC SA5005	85005	89430
RC SA5047	85047	89435
RC SA5052	85052	
RC SA5061	85061	89450
RC SA5062	85062	89408
RC SA5066	85066	89448
RC SA5067	85067	89451
RC SA5070	85070	89459
RC SA5310	85310	89423
RC SA5320	85320	89429
RC SA5724	85724	89443
RC SA5900	85900	
RC SA5918	85918	89449
RC SA5933	85933	89454
RC SA6155	646155	
SA3019	83019	
SA3041	83041	
SA3045	83045	
SA3048	83048	
SA3103	83103	
SA3110	83110	
SA3111	83111	
SA3112	83112	
SA3123	83123	89405
SA3124	83124	89407
SA3125	83125	
SA3126	83126	89430
SA3127	83127	
SA3128	83128	89436
SA3136	83136	
SA3148	83148	
SA5000	85000	89436
SA5001	85001	89410
SA5003	85003	89411
SA5005	85005	89430
SA5023	85023	89415
SA5026	85026	
SA5033	85033	89427
SA5036	85036	89405
SA5045	85045	
SA5046	85046	89434
SA5047	85047	89435
SA5052	85052	
SA5061	85061	89450
SA5062	85062	89408
SA5066	85066	89448
SA5067	85067	89451
SA5069	85069	89455
SA5070	85070	89459
SA5303	85303	89422
SA5310	85310	89423
SA5311	85311	89424
SA5320	85320	89429
SA5321	85321	
SA5323	85323	89436
SA5724	85724	89443
SA5900	85900	
SA5916	85916	89430
SA5918	85918	89449
SA5933	85933	89454

COMPETITIVE & O.E.M. INTERCHANGE LIST
Lista de Intercambios contra Competidores y Equipo Original.
Liste d'interchange de produits compétitifs & d'équipement original (OEM)

SA6155	646155	
SDA471700131258	85081	
SA3008	83008	
SA3038	83038	
SA3203	83203	89436
SA3209	83209	89414
SA3215	83215	
SA3216	83216	
SA5012	85012	89413
SA5088	85088	
SA5095	85098	89502
SA5931	85931	89458
SA5934	85934	
SA5958	85958	

WABASH NATIONAL		
O.E.M #	Gabriel	Upgrade
202447	85919	
203447	85919	
DANSR1VJ100	85078	
FLL8320307I	83203	89436
FLL83203-07I	83203	89436
FLL8320707I	83207	89407
FLL83207-07I	83207	89407
FLL8500007I	85000	89436
FLL85000-07I	85000	89436
FLL8503007I	85030	89440
FLL85030-07I	85030	89440
FRUUCE12951	85300	89419
FRUUCE1295-1	85300	89419
FRUUCE1295901	85300	89419
FRUUCE1295-901	85300	89419
FRUUCE29831	85322	
FRUUCE2983-1	85322	
FRUUCF83391	85321	
FRUUCF8339-1	85321	
HENS20001	83389	89436
HENS-20001	83389	89436
HENS20002	85000	89436
HENS-20002	85000	89436
HENS20126	85323	89436
HENS-20126	85323	89436
HENS21292	85052	
HENS-21292	85052	
HENS23566	85000	89436
HENS-23566	85000	89436
HENS24088	83389	89436
HENS24088	85000	89436

HENS-24088	83389	89436
HENS-24088	85000	89436
NEW90044089	83124	89407
NEW900-44-089	83124	89407
NEW90044162	83128	89436
NEW900-44-162	83128	89436
NEW90044625	83125	
NEW900-44-625	83125	
NEW90044626	83126	89430
NEW900-44-626	83126	89430
NEW90044642	83127	
NEW900-44-642	83127	
NEW90044794	83127	
NEW900-44-794	83127	
NEW90044868	85045	
NEW900-44-868	85045	
NEW90044978	85059	
NEW900-44-978	85059	
NEW90044979	83113	
NEW900-44-979	83113	
NEW90045040	83130	
NEW900-45-040	83130	
NEW90045054	85051	
NEW900-45-054	85051	
NEW90045298	83363	
NEW900-45-298	83128	89436
NEW90045299	85000	89436
NEW900-45-299	85000	89436

WATSON & CHALIN MFG. INC.		
O.E.M #	Gabriel	Upgrade
10147	83203	89436
10147HD	85000	89436
10148	83204	
10634	G63357	
11418	646155	
11604	83125	
11724	83123	89405
12128	85005	89430
17069	632147	
17079	85300	89419
17186	85323	89436
1718601	85323	89436
17186-01	85323	89436
17218	85029	
17297	85064	

17300	85052	
17306	85938	
17317	85344	
17382	85014	
17430	85321	
17474	85009	
19036	85934	
19249	85939	
19250	85382	
19603	85939	
3946219	83400	
53000070-001	646177	
665724	85000	89436
665727	85005	89430
665728	85060	
665769	85052	
665770	85064	
665862	85000	89436
680547	85323	89436
680584	85938	
680714	85934	
727603	83203	89436
727604	83204	
A20345	85345	
A-20345	85345	
B23649	85064	
B-23649	85064	
B23650	85052	
B-23650	85052	
B23651	85045	
B-23651	85045	
B23743	85938	
B-23743	85938	

WESTERN STAR		
O.E.M #	Gabriel	Upgrade
027005976	83400	
02-7005976	83400	
027005977	83400	
02-7005977	83400	
049041375	85315	
04-9041375	85315	

COMPETITIVE & O.E.M. INTERCHANGE LIST

Lista de Intercambios contra Competidores y Equipo Original.

Liste d'interchange de produits compétitifs & d'équipement original (OEM)

1011839	83216	
1013684000	85918	89449
10-13684-000	85918	89449
1013809000	85958	
10-13809-000	85958	
12010012	83023	
1201-0012	83023	
12020012	83023	
1202-0012	83023	
12020032	83016	
1202-0032	83016	
1615770000	85956	
16-15770-000	85956	
1615817000	85724	89443
16-15817-000	85724	89443
1618331000	85053	89442
16-18331-000	85053	89442
1618706000	85331	
16-18706-000	85331	
1618708000	85724	89443
16-18708-000	85724	89443
1672501	83126	89430
16725-01	83126	89430
1860772000	83026	
18-60772-000	83026	
1860773000	83027	
18-60773-000	83027	
1949501	83126	89430
19495-01	83126	89430
28R010	83216	
350664413	83122	89406
35066-4413	83122	89406
359010001	83209	89414
35901-0001	83209	89414
359013406	85305	
35901-3406	85305	
359013409	85304	
35901-3409	85304	
359013410	85307	
35901-3410	85307	
359013413	85006	
35901-3413	85006	
359013420	85303	89422
35901-3420	85303	89422
359014403	85060	
35901-4403	85060	
373013401	85053	89442
37301-3401	85053	89442
373013404	85053	89442
37301-3404	85053	89442
373013405	85053	89442
37301-3405	85053	89442
373013409	85053	89442
37301-3409	85053	89442
373013412	85053	89442
37301-3412	85053	89442
373904401	85053	89442
37390-4401	85053	89442
373904402	85053	89442
37390-4402	85053	89442
373904403	85053	89442
37390-4403	85053	89442
471700000470	85918	89449
471700002809	85724	89443
471700003920	85958	
471700004423	85109	
471700006269	85932	89453
471700013186	85109	
471700131331	85932	89453
4790213	83122	89406
47902-13	83122	89406
4790224	83137	
47902-24	83137	
479028	83122	89406
47902-8	83122	89406
481700006848	85724	89443
481700125969	85956	
572411	83111	
57241-1	83111	
57252	85308	89422
579051	85976	
57905-1	85976	
579052	85006	
57905-2	85006	
58913003	85932	89453
58913-003	85932	89453
58913003L	85932	89453
58913-003L	85932	89453
58913012	85932	89453
58913-012	85932	89453
58913012L	85932	89453
58913-012L	85932	89453
60657003	85072	
60657-003	85072	
60657003L	85072	
60657-003L	85072	
60675002	85979	
60675-002	85979	
60675002L	85979	
60675-002L	85979	
60680003	83112	
60680-003	83112	
60680003L	83112	
60680-003L	83112	
60680004	83143	
60680-004	83143	
60680004L	83143	
60680-004L	83143	
60680005	83142	
60680-005	83142	
60680005L	83142	
60680-005L	83142	
615016	83401	
617547	83022	
654846	83027	
660103402	83022	
66010-3402	83022	
660103403	83022	
66010-3403	83022	
660103404	83022	
66010-3404	83022	
660103405	83026	
66010-3405	83026	
660103406	83027	
66010-3406	83027	
660103407	83065	
66010-3407	83065	
665682	85053	89442
676081	83401	
676082	83401	
680611	85724	89443
725470	83010	
814903003500	83026	
81-4903003500	83026	
814903003501	83027	

COMPETITIVE & O.E.M. INTERCHANGE LIST
Lista de Intercambios contra Competidores y Equipo Original.
Liste d'interchange de produits compétitifs & d'équipement original (OEM)

90044025	83209	89414
90044907	83635	
90045099	85906	89407
90045605	85109	
90045803	85109	
90045812	85109	
CP5222	85315	
CP-5222	85315	
GBL 654916	83026	
SDA471700002809	85724	89443
SDA481700125969	85956	

WESTERN UNIT STABILAIRE SUSPENSION		
O.E.M #	Gabriel	Upgrade
101030	85307	
101364	85305	
4939967	85308	89422
80370	85304	
80600	85300	89419

WESTPORT AXLE CORP.		
O.E.M #	Gabriel	Upgrade
143699-0185	646177	
646124	646177	

WHEELED COACH IND.		
O.E.M #	Gabriel	Upgrade
ASH1136	G63623	
ASH-1136	G63623	
ASH1154	G63622	
ASH-1154	G63622	

WINNEBAGO		
O.E.M #	Gabriel	Upgrade
141700131809	85029	
141700131810	83160	
1616736000	85029	
16-16736-000	85029	
1616737000	83160	
16-16737-000	83160	
1616873000	85029	
16-16873-000	85029	
1616874000	83160	
16-16874-000	83160	

1618103000	85900	
16-18103-000	85900	
1C34-18045-AA	83209	89414
1C34-18045-JA	83209	89414
24153249	85125	
24-153249	85125	
24153256	85124	
24-153256	85124	
24186629	85125	
24-186629	85125	
481700000493	85900	
66153002	83124	89407
66153-002	83124	89407
9U94-18045-AA	83209	89414
9U9418080AA	83122	89406
9U94-18080-AA	83122	89406
9U9Z-18124-A	83209	89414
9U9Z18125A	83122	89406
9U9Z-18125-A	83122	89406
ASH-1022	83209	89414
ASH1023	83122	89406
ASH-1023	83122	89406
ASH-1136	G63623	
ASH-1154	G63622	
ASH-1205	83209	89414
ASH1206	83122	89406
ASH-1206	83122	89406
ASH-1228	83209	89414
ASH-1229	83209	89414
ASH1230	83122	89406
ASH-1230	83122	89406
ASH137	83122	89406
ASH-137	83122	89406
ASH-25822	83209	89414
ASH-25823	83209	89414
ASH25824	83122	89406
ASH-25824	83122	89406
ASH-294	83209	89414
AT-620	83209	89414
AT621	83122	89406
AT-621	83122	89406
AT-766	83209	89414
F4BE5A832MO	85125	
F4-BE5-A832-MO	85125	
F4BE5B492HO	85125	
F4-BE5-B492-HO	85125	
F4BE5C832MO	83124	89407
F4-BE5-C832-MO	83124	89407
F4BE5F324HO	85125	

F4-BE5-F324-HO	85125	
F4BE5F325HO	85124	
F4-BE5-F325-HO	85124	
W0005662	85125	
W0005663	85124	
W0006254	85125	

WORKHORSE		
O.E.M #	Gabriel	Upgrade
24153249	85125	
24-153249	85125	
24153256	85124	
24-153256	85124	
24186629	85125	
24-186629	85125	
659223	G63866	
66153002	83124	89407
66153-002	83124	89407
680672	85919	
7805X1012	85919	
7805-X-1012	85919	
F4BE5A832MO	85125	
F4-BE5-A832-MO	85125	
F4BE5B492HO	85125	
F4-BE5-B492-HO	85125	
F4BE5C832MO	83124	89407
F4-BE5-C832-MO	83124	89407
F4BE5F324HO	85125	
F4-BE5-F324-HO	85125	
F4BE5F325HO	85124	
F4-BE5-F325-HO	85124	
W0005662	85125	
W0005663	85124	
W0006254	85125	
W0007365	G63866	
W0011635	83221	
W0011636	G63366	

WORLD TRANS BUS COMPANY		
O.E.M #	Gabriel	Upgrade
ASH1136	G63623	
ASH-1136	G63623	

COMPETITIVE & O.E.M. INTERCHANGE LIST
Lista de Intercambios contra Competidores y Equipo Original.
Liste d'interchange de produits compétitifs & d'équipement original (OEM)

ASH1154	G63622	
ASH-1154	G63622	

XOS TRUCK COMPANY		
O.E.M #	Gabriel	Upgrade
58913009	85959	
58913-009	85959	
58913009L	85959	
58913-009L	85959	
60665025	85036	89405
60665-025	85036	89405
60665025L	85036	89405
60665-025L	85036	89405

HOW TO DETERMINE THE CORRECT SHOCK FOR YOUR TRUCK

CÓMO ESCOGER EL MEJOR AMORTIGUADOR PARA SU CAMIÓN

COMMENT CHOISIR LE BON AMORTISSEUR POUR VOTRE CAMION

Part Number: The catalog number for the individual shock absorber.

Extended Length*: The length of the shock absorber when it is fully extended. See “How to Measure” instructions.

Collapsed Length*: The length of the shock absorber when it is fully collapsed. See “How to Measure” instructions

Stroke: This is the approximate length of the stroke of the individual shock absorber being described.

Mounting Codes: Indicates the type of mounting ends for the upper and lower end of each shock absorber.

They are listed as follows:
- Stud type mounts (“S” & “DS”)
- Eye ring and bushing mounts (“EB”)
- Eye ring and bushing with sleeve mounts (“ES”)
- Eye ring and bushing with bar pin mounts (“BP”)
- Special mounting codes (“SP”)

Número de parte: El número de catálogo para el amortiguador individual.

Longitud extendida*: La longitud del amortiguador cuando está totalmente extendido. Consulte las instrucciones "Cómo medir".

Longitud colapsada*: La longitud del amortiguador cuando está totalmente colapsado. Consulte las instrucciones "Cómo medir".

Carrera: Esta es la longitud aproximada de la carrera del amortiguador individual que se está describiendo.

Códigos de montura: Indica el tipo de extremos de montura para el extremo superior e inferior de cada amortiguador.

Se enumeran de la siguiente manera:
- Monturas tipo perno ("S" y "DS")
- Monturas de anillo y casquillo ("EB")
- Monturas de anillo y casquillo con funda ("ES")
- Monturas de anillo y casquillo con pasador de barra ("BP")
- Códigos especiales de montura ("SP")

Numéro de pièce : Le numéro de catalogue pour l'amortisseur individuel.

Longueur en extension*: La longueur de l'amortisseur lorsqu'il est en extension complète. Voir les instructions « Comment mesurer ».

Longueur plié*: La longueur de l'amortisseur lorsqu'il est complètement plié. Voir les instructions « Comment mesurer ».

Course: Ceci est la longueur approximative de la course de l'amortisseur individuel décrit ici.

Codes de fixation: Indique le type d'extrémité de fixation pour l'extrémité supérieure et inférieure de chaque amortisseur.

Ils sont classés comme suit :
- Fixations à goujons (« S » et « DS »)
- Fixations à œillet et à douille (« EB »)
- Fixations à œillet et douille de glissement (« ES »)
- Fixations à œillet et à douille avec broche (« BP »)
- Codes de fixations spéciales (« SP »)

CONVERSION CHART | TABLA DE CONVERSIÓN | TABLEAU DE CONVERSION

Fraction | Fracción (INCHES)	Decimal | Décimal (INCHES)	Metric | Métrico | Métrique (MM)	Fraction | Fracción (INCHES)	Decimal | Décimal (INCHES)	Metric | Métrico | Métrique (MM)
1/64	0.016	0.397	33/64	0.516	13.097
1/32	0.031	0.794	17/32	0.531	13.494
3/64	0.047	1.191	35/64	0.547	13.891
1/16	0.063	1.588	9/16	0.563	14.288
5/64	0.078	1.984	37/64	0.578	14.684
3/32	0.094	2.381	19/32	0.594	15.081
7/64	0.109	2.778	39/64	0.609	15.478
1/8	0.125	3.175	5/8	0.625	15.875
9/64	0.141	3.572	41/64	0.641	16.272
5/32	0.156	3.969	21/32	0.656	16.669
11/64	0.172	4.366	43/64	0.672	17.066
3/16	0.188	4.763	11/16	0.688	17.463
13/64	0.203	5.159	45/64	0.703	17.859
7/32	0.219	5.556	23/32	0.719	18.256
15/64	0.234	5.953	47/64	0.734	18.653
1/4	0.250	6.350	3/4	0.750	19.050
17/64	0.266	6.747	49/64	0.766	19.447
9/32	0.281	7.144	25/32	0.781	19.844
19/64	0.297	7.541	51/64	0.797	20.241
5/16	0.313	7.938	13/16	0.813	20.638
21/64	0.328	8.334	53/64	0.828	21.034
11/32	0.344	8.731	27/32	0.844	21.431
23/64	0.359	9.128	55/64	0.859	21.828
3/8	0.375	9.525	7/8	0.875	22.225
25/64	0.391	9.922	57/64	0.891	22.622
13/32	0.406	10.319	29/32	0.906	23.019
27/64	0.422	10.716	59/64	0.922	23.416
7/16	0.438	11.113	15/16	0.938	23.813
29/64	0.453	11.509	61/64	0.953	24.209
15/32	0.469	11.906	31/32	0.969	24.606
31/64	0.484	12.303	63/64	0.984	25.003
1/2	0.500	12.700	1	1.000	25.400

METRIC CONVERSION CHART | TABLA DE CONVERSIÓN MÉTRICA | TABLEAU DE CONVERSION

(MM)	(INCHES)	(MM)	(INCHES)	(MM)	(INCHES)
1	0.03937	10	0.39370	19	0.74803
2	0.07874	11	0.43307	20	0.78740
3	0.11811	12	0.47244	21	0.82677
4	0.15748	13	0.51181	22	0.86614
5	0.19685	14	0.55118	23	0.90551
6	0.23622	15	0.59055	24	0.94488
7	0.27559	16	0.62992	25	0.98425
8	0.31496	17	0.66929		
9	0.35433	18	0.70866		

HOW TO DETERMINE THE CORRECT SHOCK FOR YOUR TRUCK

CÓMO ESCOGER EL MEJOR AMORTIGUADOR PARA SU CAMIÓN

COMMENT CHOISIR LE BON AMORTISSEUR POUR VOTRE CAMION

STEP 1: **Measure the diameter of the dust tube and cylinder to determine the series.**

1ER PASO: Mida el diámetro del tubo de polvo y del cilindro para determinar la serie.

1RE ÉTAPE: Mesurez le diamètre du tube de poussière et du cylindre pour déterminer la série.

EXTERNAL DIMENSIONS
DIMENSIONES EXTERNAS
DIMENSIONS EXTÉRIEURES

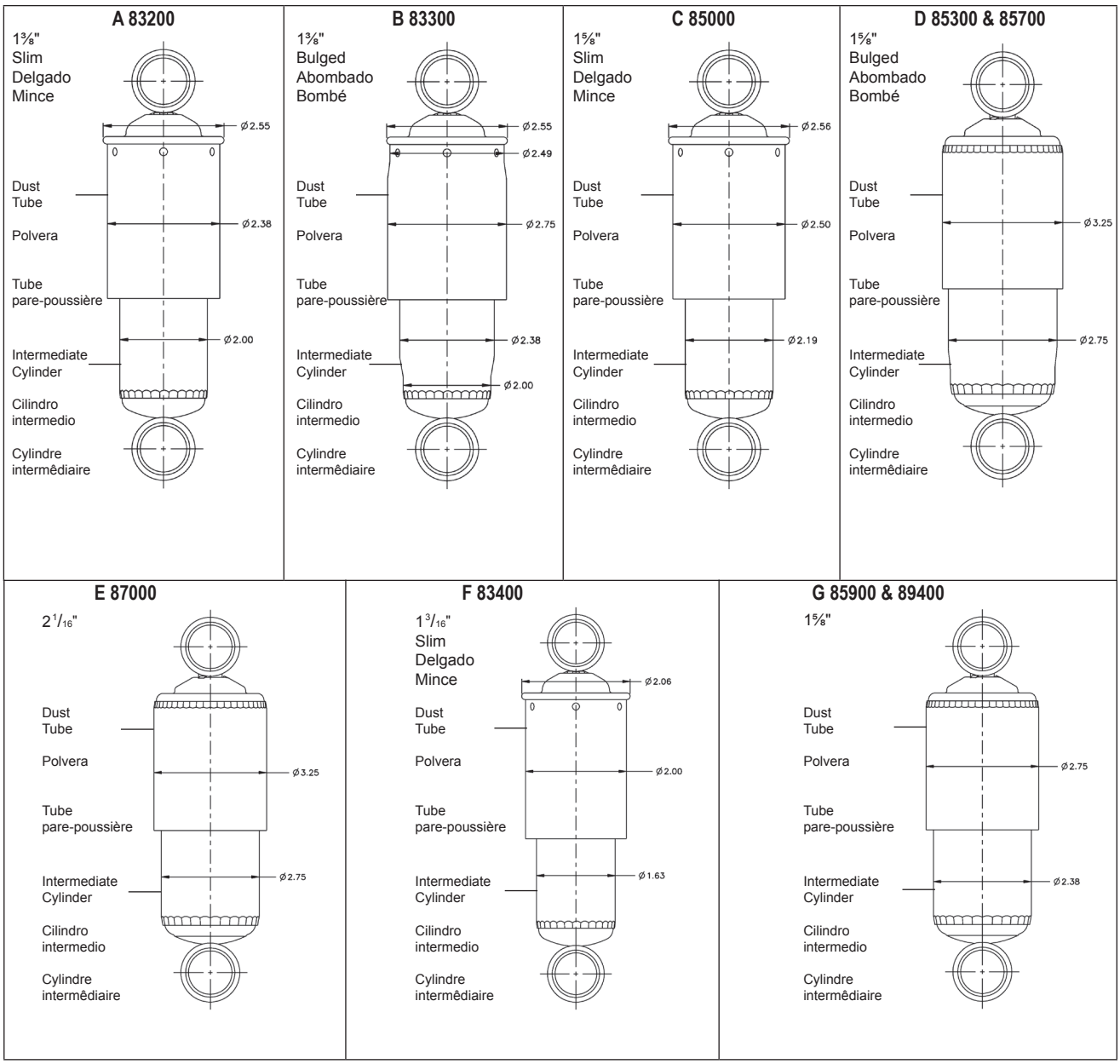

HOW TO DETERMINE THE CORRECT SHOCK FOR YOUR TRUCK

CÓMO ESCOGER EL MEJOR AMORTIGUADOR PARA SU CAMIÓN

COMMENT CHOISIR LE BON AMORTISSEUR POUR VOTRE CAMION

STEP 2: **Identify the mounting style. Measure fully extended and fully collapsed lengths at the locations indicated for mounting style.**

2O PASO: Identifique el tipo de montaje. Mida la longitud totalmente extendida y totalmente comprimida, en los puntos indicados para cada tipo de montaje.

2E ÉTAPE: Identifiez la méthode de fixation. Mesurez la longueuer en pleine extension et en pleine compression, aux endroits indiqués pour la méthode de fixation.

HOW TO MEASURE EXTENDED & COLLAPSED LENGTHS OF SHOCK ABSORBERS

COMO MEDIR LAS LONGITUDES EXTENDIDA Y COMPRIMIDA DE LOS AMORTIGUADORES

COMMENT MESURER LES LONGUEURS ALLONGÉ ET COMPRIMÉ DES AMORTISSEURS

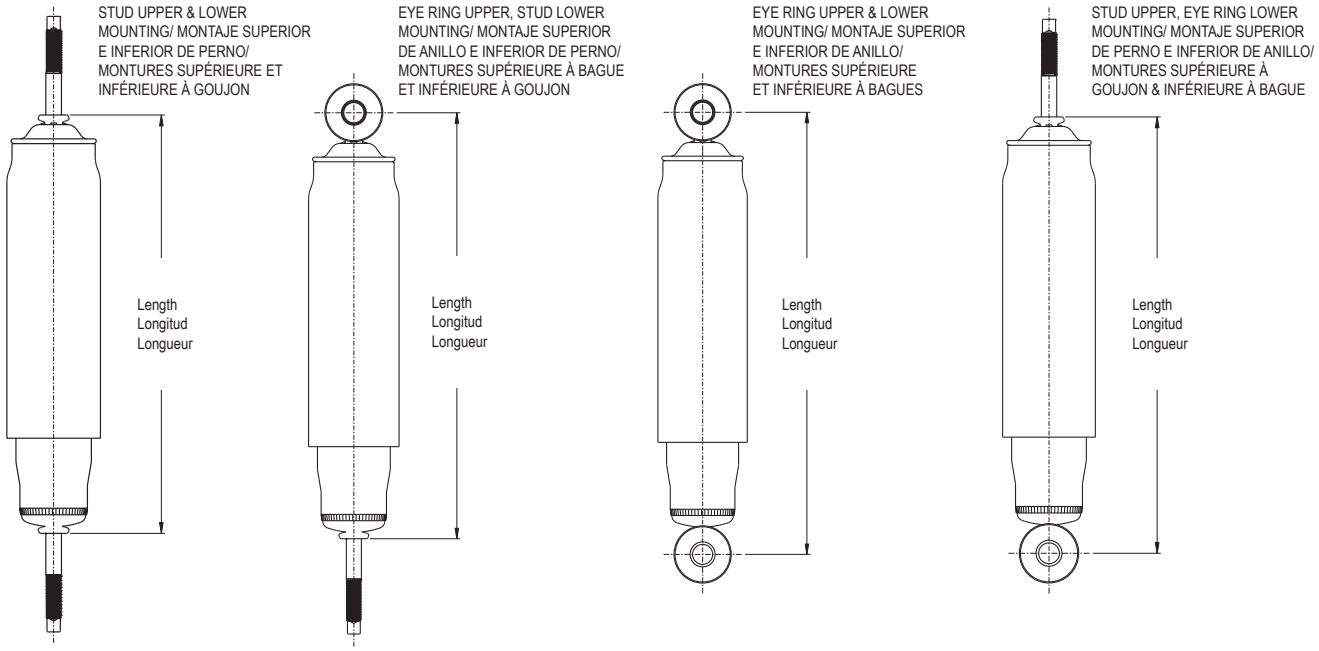

INSTRUCTIONS:

1. Using the proper measuring points as shown above find the nearest replacement shock absorber from the listing by increments of extended length.
2. Identify the proper mounting from the mounting codes and match these requirements by carefully measuring the mounting dimensions (top and bottom) of the shock absorber to be replaced.
3. Carefully take note of the following requirements:
   a. **Dust tubes** - This requirement should be noted in comparison with the shock absorber to be replaced. Shock absorber environment in its application makes this requirement necessary for piston rod protection and extended shock absorber life.
   b. **Recoil Cutoff and Compression Bumper** - Carefully note these specifications - deviation of length requirements should not exceed ± ¼". These shock absorber designs are footnoted for easy identification.

Note: Shock absorbers used for installations other than those recommended in our catalog are **not subject to warranty.**

HOW TO DETERMINE THE CORRECT SHOCK FOR YOUR TRUCK

CÓMO ESCOGER EL MEJOR AMORTIGUADOR PARA SU CAMIÓN

COMMENT CHOISIR LE BON AMORTISSEUR POUR VOTRE CAMION

INSTRUCCIONES:

1. Usando los puntos de medida adecuados como mencionado, encuentre el amortiguador más cercano en la lista por incrementos de la longitud extendida.
2. Identifique la montaje adecuado por medio de los códigos de fijación y compare estas especificaciones, midiendo cuidadosamente las dimensiones de la montaje (superior e inferior) del amortiguador por reemplazar.
3. Note cuidadosamente las exigencias siguientes:
   a. **Polvera** – Este componente debe estar presente en el amortiguador por reemplazar. El ambiente de trabajo del amortiguador hacen a la polvera necesaria para proteger la barra del pisón y extender la vida del producto.
   b. **Tope de retorno y tope de compresión** - Note cuidadosamente las especificaciones siguientes : las exigencias de longitud no deben de ser excedidas ± ¼". Estos diseños de amortiguadores están marcados para facilitar su identification.

Nota: Los amortiguadores usados para instalaciones otras que las recomendadas en nuestro catálogo **no son garantizados.**

INSTRUCTIONS:

1. En utilisant les points de mesure appropriés comme indiqués ci-dessus, trouvez l'amortisseur de rechange le plus près de cette mesure d'après la longueur allongée.
2. Repérez les montures appropriées sur les codes des montures et faites correspondre ces exigences en mesurant attentivement les dimensions des montures (haut et bas) de l'amortisseur à replacer.
3. Avec soin, prenez note des exigences suivantes:
   a. **Tubes pare-poussière** - Cette exigence devrait être notée en comparaison de l'amortisseur à remplacer. Le milieu de service rend cette exigence nécessaire pour la protection de la tige de piston et une meilleure longévité de l'amortisseur.
   b. **Arrêt de retour et butée de compression** - Notez avec soin ces spécifications. La déviation par rapport aux exigences de longueurs ne doit pas dépasser ± ¼ po. Ces modèles d'amortisseurs portent une note pour une identification facile.

Note: Les amortisseurs utilisés pour des installations autres que celles recommandées dans notre catalogue **ne sont pas couverts par la garantie.**

STEP 3: **Measure end mount diameters, widths, and lengths. Refer to the following end mount tables to determine the appropriate or matching mounting code.**

3ER PASO: Mida las dimensiones del tubo, así como el diámetro, la anchura y la longitud de las fijaciones. Consulte las tablas siguientes de conteras para determinar el código de montaje apropiado o concorde.

3E ÉTAPE: Mesurez le diamètre, la largeur et la longueur des bagues. Consultez les tableaux d'embouts suivants afin d'établir le code de montage approprié ou concordant.

HOW TO DETERMINE THE CORRECT SHOCK FOR YOUR TRUCK
CÓMO ESCOGER EL MEJOR AMORTIGUADOR PARA SU CAMIÓN
COMMENT CHOISIR LE BON AMORTISSEUR POUR VOTRE CAMION

MOUNTING CODE "EB" EYE RING AND BUSHING
CÓDIGO DE MONTAJE «EB» ANILLO Y BUJE
CODE DE MONTURE "EB" A BAGUE ET MANCHON

EB1

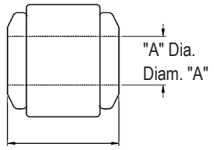

FREE LENGTH "B"
COMP LENGTH "C"
LONGITUD LIBRE "B"
LONGITUD COMPRIMIDA "C"
LONGUEUR NON COMP "B"
LONGUEUR COMP "C"

EB2
EB3
EB19

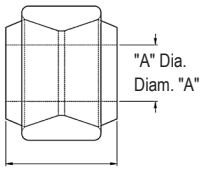

FREE LENGTH "B"
COMP LENGTH "C"
LONGITUD LIBRE "B"
LONGITUD COMPRIMIDA "C"
LONGUEUR NON COMP "B"
LONGUEUR COMP "C"

EB4

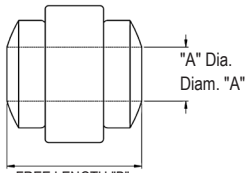

FREE LENGTH "B"
COMP LENGTH "C"
LONGITUD LIBRE "B"
LONGITUD COMPRIMIDA "C"
LONGUEUR NON COMP "B"
LONGUEUR COMP "C"

EB7

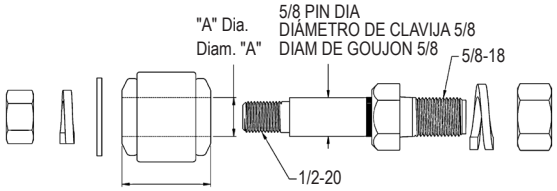

FREE LENGTH "B"
COMP LENGTH "C"
LONGITUD LIBRE "B"
LONGITUD COMPRIMIDA "C"
LONGUEUR NON COMP "B"
LONGUEUR COMP "C"

Mounting Code Código de montaje Code de monture	"A" Dia. Diámetro "A" Diam. "A"	B Free Length Longitud libre Long. non comp.	C Comp. Length Longitud comprimida Long. comp.	Vehicle Mounting Pin Dia. Diámetro de clavija de montaje del vehículo Diam. du goujon de montage du véhicule
EB1	5/8	1.44	1.31	5/8
EB2	3/4	1.75	1.50	3/4
EB3	1.00	1.91	1.75	1.00
EB4	11/16	1.72	1.55	11/16
EB7	5/8	1.44	1.31	Mounting pin furnished with shock absorber for 5/8" dia. vehicle mounting hole. Perno proveído con el amortiguador para orificio de montaje de 5/8" de diámetro. Goujon de montage fourni avec l'amortisseur pour trou de montage de 5/8 po de diam. sur véhicule.
EB19	20MM	1.75	--	20MM

HOW TO DETERMINE THE CORRECT SHOCK FOR YOUR TRUCK

CÓMO ESCOGER EL MEJOR AMORTIGUADOR PARA SU CAMIÓN

COMMENT CHOISIR LE BON AMORTISSEUR POUR VOTRE CAMION

MOUNTING CODE "ES" EYE RING AND BUSHING WITH STEEL SLEEVE

CÓDIGO DE MONTAJE «ES» ANILLO Y BUJE CON CAMISA DE ACERO

CODE DE MONTURE "ES" BAGUE ET MANCHON AVEC COLLET EN ACIER

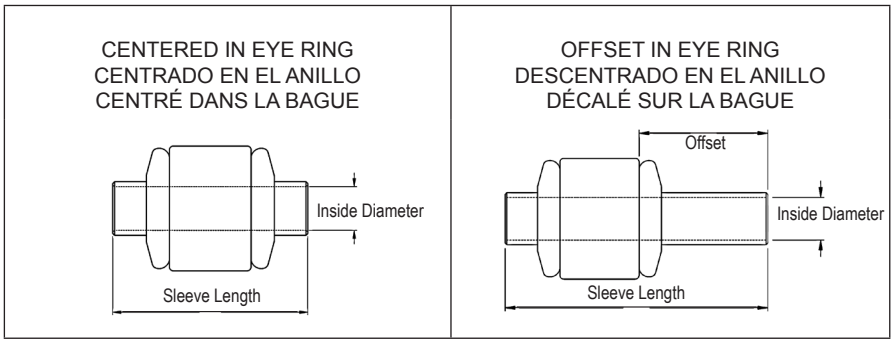

ES CODES SORTED NUMERICALLY

CÓDIGOS «ES» ORDENADOS NUMÉRICAMENTE

CODES"ES" TRIÉS NUMÉRIQUEMENT

MOUNTING CODE	DIMENSION			
	Inside Diamter		Sleeve Length	
	(inches)	(mm)	(inches)	(mm)
ES18	0.47	12.00	1.65	41.91
ES19	0.47	12.00	1.88	47.75
ES20	0.47	12.00	1.95	49.53
ES24	0.50	12.70	1.38	35.05
ES25	0.50	12.70	1.50	38.10
ES26	0.50	12.70	1.56	39.62
ES27	0.50	12.70	1.62	41.15
ES31*	0.50	12.70	2.25	57.15
ES34	0.56	14.29	1.66	42.16
ES35	0.63	15.88	1.38	35.05
ES36	0.75	19.05	1.75	44.45
ES41	0.47	12.00	3.48	88.39
ES53	0.39	10.00	1.38	35.05
ES56	0.55	14.00	1.58	40.13
ES60	0.55	14.00	1.26	32.00
ES69	0.47	12.00	1.58	40.13
ES83	0.47	12.00	1.48	37.59
ES85	0.47	12.00	2.36	59.94
ES86	0.55	14.00	2.44	61.98
ES90	0.63	15.88	2.00	50.80
ES91	0.50	12.70	2.10	53.34
ES104	0.79	20.00	1.58	40.13
ES106	0.39	10.00	1.48	37.59
ES110	0.63	16.00	1.61	40.89
ES112	0.47	12.00	1.08	27.43
ES113	0.63	16.00	1.49	37.85
ES115	0.39	10.00	2.02	51.31
ES118	0.47	12.00	1.31	33.27
ES120	0.75	19.05	2.76	70.10
ES121	0.75	19.05	2.06	52.32
ES126	0.50	12.70	2.44	61.98
ES128	0.50	12.70	1.66	42.16
ES130	0.50	12.70	1.56	39.62
ES136	0.63	15.88	1.75	44.45
ES138	0.63	15.88	1.70	43.18
ES141	0.47	12.00	1.61	40.89
ES142	0.63	16.00	1.43	36.32
ES147	0.47	12.00	1.97	50.04

* 1.00" Offset

MOUNTING CODE	DIMENSION			
	Inside Diamter		Sleeve Length	
	(inches)	(mm)	(inches)	(mm)
ES149	0.50	12.70	2.36	59.94
ES150	0.75	19.05	2.24	56.90
ES152	0.79	20.00	1.69	42.93
ES153	0.55	14.00	1.55	39.37
ES158	0.75	19.05	3.80	96.52
ES159**	0.75	19.05	3.21	81.53
ES160	1.00	25.40	2.01	51.05
ES161	0.63	16.00	3.95	100.33
ES162	0.63	16.00	2.60	66.04
ES163	0.44	11.11	2.50	63.50
ES164	0.50	12.70	2.26	57.40
ES165	0.50	12.70	1.75	44.45
ES166	0.63	15.88	2.97	75.44
ES167	0.55	14.00	2.31	58.67
ES168	0.55	14.00	2.62	66.55
ES169	0.55	14.00	1.91	48.51
ES171	0.50	12.70	1.88	47.75
ES172	0.50	12.70	2.72	69.09
ES173	0.88	22.23	2.28	57.91
ES174	0.63	15.88	3.25	82.55
ES175	0.63	16.00	1.96	49.78
ES176	0.63	16.00	3.72	94.49
ES177	0.63	16.00	3.55	90.17
ES178	0.75	19.05	1.96	49.78
ES179	0.79	20.00	1.75	44.45
ES181	0.44	11.11	1.98	50.29
ES182	0.79	20.00	1.96	49.78
ES183	0.79	20.00	3.80	96.52
ES184	0.79	20.00	2.44	61.98
ES185	0.47	12.00	2.44	61.98
ES187	1.00	25.40	1.75	44.45
ES188	0.63	16.00	1.81	45.97
ES190	0.87	22.00	1.75	44.45
ES193	0.94	24.00	2.28	57.91
ES194	0.88	22.23	2.28	57.91
ES195	0.48	12.30	2.165	54.99
ES206	0.50	12.7	3.13	79.50
ES211	0.47	12.08	3.94	100

** 1.03" Offset

HOW TO DETERMINE THE CORRECT SHOCK FOR YOUR TRUCK
CÓMO ESCOGER EL MEJOR AMORTIGUADOR PARA SU CAMIÓN
COMMENT CHOISIR LE BON AMORTISSEUR POUR VOTRE CAMION

MOUNTING CODE "ES" EYE RING AND BUSHING WITH STEEL SLEEVE (Cont'd)
CÓDIGO DE MONTAJE «ES» ANILLO Y BUJE CON CAMISA DE ACERO
CODE DE MONTURE "ES" BAGUE ET MANCHON AVEC COLLET EN ACIER

ES CODES SORTED BY INSIDE DIAMETER / LENGTH
CÓDIGOS «ES» ORDENADOS POR DIÁMETRO INTERIOR / LONGITUD
CODES "ES" TRIÉS PAR DIAMÈTRE INTÉRIEUR / LONGUEUR

MOUNTING CODE	DIMENSION			
	Inside Diameter		Length	
	(inches)	(mm)	(inches)	(mm)
ES53	0.39	10.00	1.38	35.05
ES106	0.39	10.00	1.48	37.59
ES115	0.39	10.00	2.02	51.31
ES181	0.44	11.11	1.98	50.29
ES163	0.44	11.11	2.50	63.50
ES112	0.47	12.00	1.08	27.43
ES118	0.47	12.00	1.31	33.27
ES24	0.50	12.70	1.38	35.05
ES83	0.47	12.00	1.48	37.59
ES25	0.50	12.70	1.50	38.10
ES26	0.50	12.70	1.56	39.62
ES130	0.50	12.70	1.56	39.62
ES69	0.47	12.00	1.58	40.13
ES141	0.47	12.00	1.61	40.89
ES27	0.50	12.70	1.62	41.15
ES18	0.47	12.00	1.65	41.91
ES128	0.50	12.70	1.66	42.16
ES165	0.50	12.70	1.75	44.45
ES19	0.47	12.00	1.88	47.75
ES171	0.50	12.70	1.88	47.75
ES20	0.47	12.00	1.95	49.53
ES147	0.47	12.00	1.97	50.04
ES91	0.50	12.70	2.10	53.34
ES195	0.48	12.30	2.165	54.99
ES31*	0.50	12.70	2.25	57.15
ES164	0.50	12.70	2.26	57.40
ES85	0.47	12.00	2.36	59.94
ES149	0.50	12.70	2.36	59.94
ES185	0.47	12.00	2.44	61.98
ES126	0.50	12.70	2.44	61.98
ES172	0.50	12.70	2.72	69.09
ES206	0.50	12.7	3.13	79.50
ES41	0.47	12.00	3.48	88.39
ES211	0.47	12.08	3.94	100
ES60	0.55	14.00	1.26	32.00
ES153	0.55	14.00	1.55	39.37
ES56	0.55	14.00	1.58	40.13
ES34	0.56	14.29	1.66	42.16
ES169	0.55	14.00	1.91	48.51
ES167	0.55	14.00	2.31	58.67
ES86	0.55	14.00	2.44	61.98
ES168	0.55	14.00	2.62	66.55

* 1.00" Offset

MOUNTING CODE	DIMENSION			
	Inside Diameter		Length	
	(inches)	(mm)	(inches)	(mm)
ES35	0.63	15.88	1.38	35.05
ES138	0.63	15.88	1.70	43.18
ES136	0.63	15.88	1.75	44.45
ES90	0.63	15.88	2.00	50.80
ES166	0.63	15.88	2.97	75.44
ES174	0.63	15.88	3.25	82.55
ES142	0.63	16.00	1.43	36.32
ES113	0.63	16.00	1.49	37.85
ES110	0.63	16.00	1.61	40.89
ES188	0.63	16.00	1.81	45.97
ES175	0.63	16.00	1.96	49.78
ES162	0.63	16.00	2.60	66.04
ES177	0.63	16.00	3.55	90.17
ES176	0.63	16.00	3.72	94.49
ES161	0.63	16.00	3.95	100.33
ES36	0.75	19.05	1.75	44.45
ES178	0.75	19.05	1.96	49.78
ES121	0.75	19.05	2.06	52.32
ES150	0.75	19.05	2.24	56.90
ES120	0.75	19.05	2.76	70.10
ES159**	0.75	19.05	3.21	81.53
ES158	0.75	19.05	3.80	96.52
ES104	0.79	20.00	1.58	40.13
ES152	0.79	20.00	1.69	42.93
ES179	0.79	20.00	1.75	44.45
ES182	0.79	20.00	1.96	49.78
ES184	0.79	20.00	2.44	61.98
ES183	0.79	20.00	3.80	96.52
ES190	0.87	22.00	1.75	44.45
ES173	0.88	22.23	2.28	57.91
ES194	0.88	22.23	2.28	57.91
ES193	0.94	24.00	2.28	57.91
ES187	1.00	25.40	1.75	44.45
ES160	1.00	25.40	2.01	51.05

** 1.03" Offset

MOUNTING CODE "BP" EYE RING AND BUSHING WITH BAR PIN

CÓDIGO DE MONTAJE «BP» ANILLO Y BUJE CON CLAVIJA TIPO BARRA

CODE DE MONTURE "BP" BAGUE ET MANCHON AVEC GOUPÏLLE

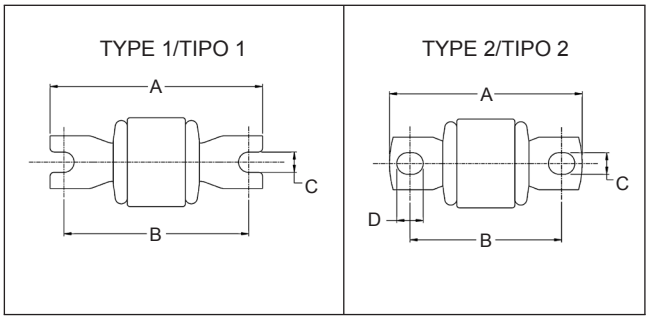

MOUNTING CODE	TYPE	A	B	C	D	E
BP7	2	3.13	2.50	0.35	0.42	--
BP8	2	3.50	2.87	0.35	0.42	--
BP9	1	3.38	2.60	0.35	0.57	--
BP10	2	3.5	2.74	0.50	0.50	--
BP14	2	3.43	2.87	0.45	--	--
BP27	2	4.00	2.95	0.52	0.50	--

HOW TO DETERMINE THE CORRECT SHOCK FOR YOUR TRUCK
CÓMO ESCOGER EL MEJOR AMORTIGUADOR PARA SU CAMIÓN
COMMENT CHOISIR LE BON AMORTISSEUR POUR VOTRE CAMION

MOUNTING CODES "S" & "DS" STUD MOUNTS
CÓDIGOS DE MONTAJE «S» Y «DS» MONTAJES DE DOBLE PERNO
CODES DE MONTURE "S" & "DS" À GOUJON

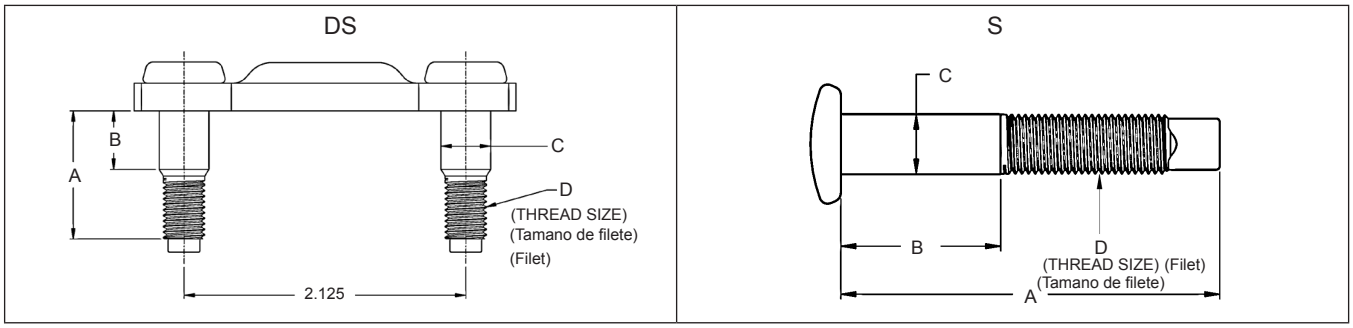

MOUNTING CODE	A	B	C	D
DS1	1.27	0.66	3/8	5/16-24
S1	2.37	1.00	3/8	3/8-24
S10	2.37	1.33	7/16	3/8-24
S11	3.00	1.12	3/8	3/8-24
S12	2.37	1.15	7/16	3/8-24
S16	2.95	1.45	16MM	16MM
S21	3.28	1.75	5/8	5/8-18
S36	2.49	1.33	7/16	3/8-24
S38	2.75	1.70	14MM	12MM
S40	2.52	1.33	7/16	3/8-24
S42	3.50	2.00	5/8	5/8-18
S43	2.75	1.25	5/8	5/8-18
S47	2.20	1.31	10MM	M10x1.25
S61	3.11	1.45	14MM	M12x1.25
S62	3.24	1.70	9/16	M12x1.25
S92	1.42	0.63	0.41	M12x1.25
S104	0.98	0.08	0.47	M12X1.25

HOW TO DETERMINE THE CORRECT SHOCK FOR YOUR TRUCK

CÓMO ESCOGER EL MEJOR AMORTIGUADOR PARA SU CAMIÓN

COMMENT CHOISIR LE BON AMORTISSEUR POUR VOTRE CAMION

SPRING SEAT MOUNTING TYPES

ASIENTO DE MUELLE

SIÈGE À RESSORT

TOP MOUNT - TMT3S

Triangle Top Mount

3 Studs

TOP MOUNT - TMU2B1S

Unique Top Mount

2 Bolts, 1 Stud

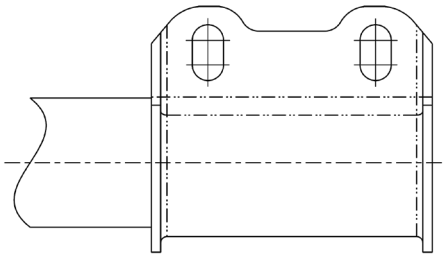

CLEVIS - CL1

2 oblong mounting holes

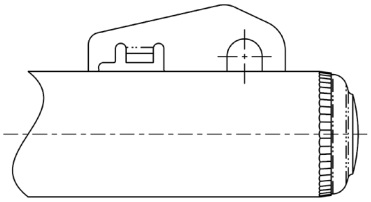

PINCH SOCKET - LP4

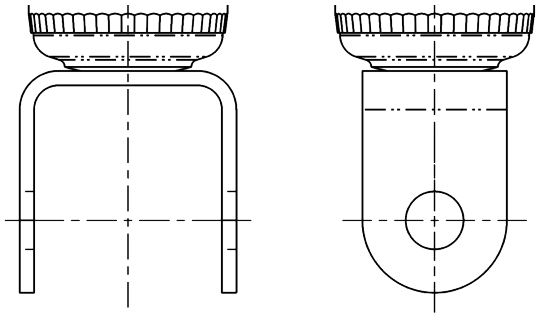

U JOINT - LU1

HOW TO DETERMINE THE CORRECT SHOCK FOR YOUR TRUCK
CÓMO ESCOGER EL MEJOR AMORTIGUADOR PARA SU CAMIÓN
COMMENT CHOISIR LE BON AMORTISSEUR POUR VOTRE CAMION

EXPLANATION OF COLUMN HEADINGS
EXPLICACIÓN DE LOS TÍTULOS DE LAS COLUMNAS
EXPLICATION DES EN-TÊTES DE COLONNES

SHOCK ABSORBER PART NUMBER: The catalog number for the individual shock absorber.	**Número de parte del amortiguador:** El número de catálogo para el amortiguador individual.	**Numéro de pièce de l'amortisseur:** Le numéro de catalogue pour l'amortisseur individuel.
EXTENDED LENGTH:* The length of the shock absorber when it is fully extended. See "How to Measure" instructions.	**Longitud extendida :*** La longitud del amortiguador cuando está totalmente extendido. Ver instrucciones «Cómo medir».	**Longueur étirée:*** La longueur de l'amortisseur entièrement étiré. Voir "Comment mesurer".
COLLAPSED LENGTH:* The length of the shock absorber when it is fully compressed. See "How to Measure" instructions.	**Longitud comprimida :*** La longitud del amortiguador cuando está totalmente comprimido. Ver instrucciones «Cómo medir».	**Longueur comprimée:*** La longueur de l'amortisseur entièrement comprimé. Voir "Comment mesurer".
STROKE: This is the approximate length of the stroke of the individual shock absorber being described.	**Carrera :** Es la longitud aproximada del recorrido del amortiguador descrito.	**Course:** C'est la longueur approximative de la course de l'amortisseur individuel décrit.
MOUNTING CODES: Indicates the type of mounting ends for the upper and lower end of each shock absorber. They are listed as follows: Stud Type Mounts ("S" & "DS") Eye Ring and Bushing Mounts ("EB") Eye Ring and Bushing with Sleeve Mounts ("ES") Eye Ring and Bushing with Bar Pin Mounts ("BP") Special Mounting Codes ("SP")	**Códigos de montaje :** Indica el tipo de montantes de montaje superior e inferior para cada amortiguador. Se enlistan como sigue : Montajes tipo perno («S» y «DS») Montajes anillo y buje («EB») Montajes anillo y buje con camisa («ES») Montajes anillo y buje con clavija («BP») Códigos de montajes especiales («SP»)	**Codes de monture:** Indique le type de montures supérieure et inférieure de chaque amortisseur. Ils sont énumérés comme suit: Montures de type goujon ("S" et "DS") Montures à bague et manchon ("EB") Montures à bague et manchon avec collet ("ES") Montures à bague et manchon avec goupille ("BP") Codes de montures spéciales ("SP")
DUST TUBE: Indicates whether the shock absorber is supplied with a dust tube.	**Polvera:** Indica si el amortiguador cuenta un polvera.	**Tube pare-poussière:** Indique que l'amortisseur est fourni avec un tube pare-poussière.
MOUNTING ACCESSORY PACKAGE NUMBER: The part number of the Mount Accessory Package supplied with the shock absorber.	**Número de paquete de accesorios de montaje:** El número de parte del paquete de accesorios de montaje proveído con el amortiguador.	**Numéro d'emballage d'accessoires de montage:** Le numéro de pièce de l'emballage d'accessoires de montage fourni avec l'amortisseur.
***NOTE:** All dimensions shown are in inches	***Nota :** Todas las dimensiones son en pulgadas	***Note:** Toutes les dimensions indiquées sont en pouces

STEP 4: **Refer to shock absorber specifications by end mount. Start first by finding the appropriate series. Next, match the extended/collapsed length and find the correct mounting codes. Refer to the far left column of the chart for the correct Gabriel shock absorber part number.**

4º PASO: Consulte las especificaciones del amortiguador mostradas al final del catálogo. Encuentre primero la serie adecuada. Luego, compare las longitudes de extensión y de compresión, y encuentre los códigos de montaje correctos. Consulte la columna del extremo izquierdo de la tabla para identificar el número de parte del amortiguador Gabriel correcto.

4E ÉTAPE: Reportez-vous aux spécifications d'amortisseur énoncées à la fin du catalogue. Trouvez d'abord la série appropriée. Comparez ensuite les longueurs d'extension et de compression et trouvez les bons codes de fixation. Reportez-vous à la colonne située à la extrême gauche de tableau pour indentifier le bon numéro de pièce pour un amortisseur Gabriel.

SPECIFICATIONS BY END MOUNT
ESPECIFICACIONES POR TIPO DE MONTAJE
SPÉCIFICATIONS PAR FIXATION DES EXTRÉMITÉS

Gabriel	Mounting		Bore	External Diameter Illustration	Lengths			Dust Tube	Recoil Cutoff	Controls*	
	Upper	Lower			Extended	Collapsed	Stroke			Rebound	Compression
83171		ES36	1-3/8"	A	23.98	14.51	9.47	YES	YES	513	146
83013	BP8	BP8	1-3/16"	2" D/T	7.66	6.63†	1.7	YES	NO	646	480
G63837	BP8	ES41	1-3/8"		28.23	17.95	10.28				
83015	BP8	S1	1-3/8"	A	9.84	7.59	2.25	YES	YES	735	430
83005	BP8	S10	1-3/16"	2" D/T	7.34	5.87	1.47	YES	NO	858	216
G63607	BP14	ES185	1-3/8"		25.58	15.3	10.28				
G63896	BP14	ES34	1-3/8"		22.36	13.92	8.44				
G63897	BP14	ES34	1-3/8"		23.87	14.68	9.19				
G63679	BP14	ES83	1-3/8"		25.01	14.98	10.03				
83041	BP27	S10	1-3/8"	A	10.51†	8.34†	3.02	YES	YES	486	189
83060	EB	BP7	1-3/8"	A	9.76	7.98†	2.25	NO	YES	431	441
83401	EB1	EB1	1-3/16"	F	24.09	14.26	9.83	YES	NO	341	252
G63419	EB1	EB1	1-3/8"		24.08	14.55	9.53				
G63405	EB1	EB1	1-3/8"		20.01	12.48	7.53				
83007	EB1	EB1	1-3/8"	A	18.55	11.67	6.87	NO	NO	489	343
G63299	EB1	EB1	1-3/8"		18.08	11.55	6.53				
83011	EB1	EB1	1-3/8"	A	11.55†	8.48	3.61	YES	YES	738	330
83012	EB1	EB1	1-3/8"	A	11.07†	8.21	3.37	YES	YES	738	330
G63625	EB1	ES24	1-3/8"		22.56	13.78	8.78				
G63355	EB1	ES24	1-3/8"		14.98	9.95	5.03				
G63888	EB1	ES41	1-3/8"		31.36	18.67	12.69				
G63808	EB1	ES83	1-3/8"		28.86	17.08	11.78				
G64010	EB1	ES83	1-3/8"		26.94	16	10.94				
G63461	EB1	ES83	1-3/8"		25.51	15.23	10.28				
G63406	EB1	ES83	1-3/8"		22.98	13.95	9.03				
G63809	EB1	ES83	1-3/8"		22.98	13.95	9.03				
G63810	EB1	ES185	1-3/8"		31.6	18.57	13.03				
G63524	EB1	ES185	1-3/8"		27.08	16.05	11.03				
G63775	EB1	ES185	1-3/8"		27.08	16.05	11.03				
G63525	EB1	ES185	1-3/8"		22.98	13.95	9.03				
G63773	EB1	ES185	1-3/8"		22.98	13.95	9.03				
G63409	EB1	ES185	1-3/8"		21.48	13.2	8.28				
85063	EB2	EB2	1-5/8"	C	32.01	18.85	13.16	YES	NO	762	174
83107	EB2	EB2	1-3/8"	A	31.66	18.4	13.25	YES	NO	352	77
83314	EB2	EB2	1-3/8"	B	30.64	18.11	12.53	YES	YES	633	143
85024	EB2	EB2	1-5/8"	C	28.77	17.25	11.52	YES	YES	1008	539
83309	EB2	EB2	1-3/8"	B	28.64	17.11	11.53	YES	YES	589	135

* Damping force, in pounds, to either extend or collapse the shock absorber at an average operating velocity. Fuerza de amortiguación en libras para extender o comprimir el amortiguador a una velocidad de operación promedio. La puissance d'amortissement en poids de l'amortisseur, soit comprimé, doit détendu, à une vitesse de fonctionnement moyenne.

† At bumper contact / Al contacto cone el tope de goma / Au contact avec le butoir

‡ For GasSLX Series, forces are at the "Firm" (F) setting. / Para la serie GasSLX, fas fuerzas estan adjustada en (F) "Firme". / Pour la série GasSLX, le réglage de la force est sur «Ferme» (F)

SPECIFICATIONS BY END MOUNT
ESPECIFICACIONES POR TIPO DE MONTAJE
SPÉCIFICATIONS PAR FIXATION DES EXTRÉMITÉS

Gabriel	Mounting		Bore	External Diameter Illustration	Lengths			Dust Tube	Recoil Cutoff	Controls*	
	Upper	Lower			Extended	Collapsed	Stroke			Rebound	Compression
89416	EB2	EB2	1-5/8"	G	28.62	17.54	11.08	YES	YES	1155‡	514
89401	EB2	EB2	1-5/8"	G	28.41	17.16	11.25	YES	NO	665‡	194
89446	EB2	EB2	1-5/8"	G	28.36	17.41	10.95	YES	YES	702‡	204
85046	EB2	EB2	1-5/8"	C	27.55	16.62	10.93	YES	YES	1008	539
89409	EB2	EB2	1-5/8"	G	27.13	16.92	10.2	YES	YES	567‡	165
89434	EB2	EB2	1-5/8"	G	27.12	16.79	10.33	YES	YES	1155‡	514
89403	EB2	EB2	1-5/8"	G	26.86	17.16	9.7	YES	YES	929‡	281
83312	EB2	EB2	1-3/8"	B	26.64	16.11	10.53	YES	YES	527	152
89439	EB2	EB2	1-5/8"	G	25.67	15.79	9.88	YES	NO	518‡	103
85055	EB2	EB2	1-5/8"	C	25.63	15.63	10	YES	NO	577	102
85047	EB2	EB2	1-5/8"	C	25.31	15.52	9.79	YES	YES	1008	539
83308	EB2	EB2	1-3/8"	B	25.14	15.36	9.78	YES	YES	445	180
89435	EB2	EB2	1-5/8"	G	24.92	15.82	9.1	YES	YES	1155‡	514
83200	EB2	EB2	1-3/8"	A	24.51	15.1	9.53	YES	NO	806	370
89402	EB2	EB2	1-5/8"	G	24.41	15.16	9.25	YES	NO	874‡	206
83519	EB2	EB2	1-3/16"	F	23.83	14.35	9.48	YES	NO	292	132
83216	EB2	EB2	1-3/8"	A	23.51	14.48	9.03	YES	YES	776	262
85054	EB2	EB2	1-5/8"	C	23.26	14.37	8.89	YES	NO	602	104
89438	EB2	EB2	1-5/8"	G	23.17	14.54	8.63	YES	NO	583‡	103
83404	EB2	EB2	1-3/16"	F	22.01	13.44	8.58	YES	NO	545	171
83159	EB2	EB2	1-3/8"	A	21.85	13.56	8.29	YES	NO	658	149
85012	EB2	EB2	1-5/8"	C	21.02	13.23	7.79	YES	NO	523	199
89413	EB2	EB2	1-5/8"	G	20.94	13.53	7.41	YES	NO	536‡	201
85023	EB2	EB2	1-5/8"	C	20.27	13	7.27	YES	YES	1008	539
89415	EB2	EB2	1-5/8"	G	20.12	13.29	6.83	YES	YES	1155‡	514
83219	EB2	EB2	1-3/8"	A	20.01	12.73	7.28	YES	YES	299	125
85062	EB2	EB2	1-5/8"	C	19.76	12.6	7.16	YES	NO	523	199
89408	EB2	EB2	1-5/8"	G	19.68	12.9	6.78	YES	NO	536‡	201
85025	EB2	S21	1-5/8"	C	23.02	14.01	9.01	YES	NO	1079	539
85376	EB3	EB3	1-5/8"	D	33.27	19.73	13.54	YES	NO	668	134
85301	EB3	EB3	1-5/8"	D	31.92	19.03	12.89	YES	NO	1442	455
85339	EB3	EB3	1-5/8"	D	31.68	19.02	12.66	YES	YES	804	463
85040	EB3	EB3	1-5/8"	C	30.91	18.51	12.4	YES	NO	889	114
85730	EB3	EB3	1-5/8"	D	30.75	18.72	12.03	YES	YES	1517	293
85315	EB3	EB3	1-5/8"	D	29.61	18.07	11.53	YES	NO	380	142
85901	EB3	EB3	1-5/8"	G	29.09	17.68	11.42	YES	NO	1830	418
85704	EB3	EB3	1-5/8"	D	28.75	18.72	10.03	YES	YES	1435	186

* Damping force, in pounds, to either extend or collapse the shock absorber at an average operating velocity. Fuerza de amortiguación en libras para extender o comprimir el amortiguador a una velocidad de operación promedio. La puissance d'amortissement en poids de l'amortisseur, soit comprimé, doit détendu, à une vitesse de fonctionnement moyenne.

† At bumper contact / Al contacto cone el tope de goma / Au contact avec le butoir

‡ For GasSLX Series, forces are at the "Firm" (F) setting. / Para la serie GasSLX, fas fuerzas estan adjustada en (F) "Firme". / Pour la série GasSLX, le réglage de la force est sur «Ferme» (F)

SPECIFICATIONS BY END MOUNT
ESPECIFICACIONES POR TIPO DE MONTAJE
SPÉCIFICATIONS PAR FIXATION DES EXTRÉMITÉS

Gabriel	Mounting		Bore	External Diameter Illustration	Lengths			Dust Tube	Recoil Cutoff	Controls*	
	Upper	Lower			Extended	Collapsed	Stroke			Rebound	Compression
83104	EB3	EB3	1-3/8"	A	28.24	17.12	11.12	YES	NO	698	133
85305	EB3	EB3	1-5/8"	D	27.25	16.7	10.55	YES	NO	1120	225
83362	EB3	EB3	1-3/8"	B	27	16.25	10.75	YES	NO	539	202
87004	EB3	EB3	2-1/16"	E	26.76	16.76	10	YES	YES	1158	190
85735	EB3	EB3	1-5/8"	D	26.72	16.7	10.02	YES	YES	1288	227
83215	EB3	EB3	1-3/8"	A	26.64	16.36	10.28	YES	YES	697	108
89425	EB3	EB3	1-5/8"	G	26.5	16.93	9.57	YES	YES	1352‡	167
85314	EB3	EB3	1-5/8"	D	26.49	16.46	10.03	YES	YES	1216	169
89410	EB3	EB3	1-5/8"	G	26.34	16.57	9.77	YES	NO	1185‡	182
85001	EB3	EB3	1-5/8"	C	26.3	16.39	9.92	YES	NO	1202	186
85313	EB3	EB3	1-5/8"	D	26.26	16.35	9.91	YES	YES	717	111
87003	EB3	EB3	2-1/16"	E	26.26	16.51	9.75	YES	YES	1332	395
89429	EB3	EB3	1-5/8"	G	26.22	16.57	9.65	YES	NO	941‡	266
85320	EB3	EB3	1-5/8"	D	26.15	16.35	9.8	YES	NO	970	308
85700	EB3	EB3	1-5/8"	D	26.09	16.58	9.51	YES	YES	1446	328
83140	EB3	EB3	1-3/8"	A	25.28	15.53	9.75	YES	NO	738	88
83141	EB3	EB3	1-3/8"	A	25.27	15.52	9.75	YES	NO	408	113
83132	EB3	EB3	1-3/8"	A	25.24	15.5	9.74	YES	NO	828	150
85714	EB3	EB3	1-5/8"	D	25.13	15.85	9.28	YES	YES	1220	175
85715	EB3	EB3	1-5/8"	D	25.13	15.85	9.28	YES	YES	1915	200
85717	EB3	EB3	1-5/8"	D	25.13	15.85	9.28	YES	YES	1915	200
89422	EB3	EB3	1-5/8"	G	25.12	16.3	8.83	YES	YES	794‡	253
85308	EB3	EB3	1-5/8"	D	25.11	15.83	9.28	YES	YES	764	254
85303	EB3	EB3	1-5/8"	D	24.76	15.48	9.29	YES	NO	1019	221
89442	EB3	EB3	1-5/8"	G	24.72	15.74	8.98	YES	NO	1055‡	224
85053	EB3	EB3	1-5/8"	C	24.69	15.52	9.17	YES	NO	1019	227
85329	EB3	EB3	1-5/8"	D	24.52	15.48	9.04	YES	YES	1550	232
85713	EB3	EB3	1-5/8"	D	24.51	15.48	9.04	YES	YES	1157	180
85007	EB3	EB3	1-5/8"	C	24.33	15.4	8.93	YES	YES	1008	171
89412	EB3	EB3	1-5/8"	G	24.26	15.68	8.58	YES	YES	1155‡	169
83225	EB3	EB3	1-3/8"	A	24.14	15.11	9.03	YES	YES	482	159
85307	EB3	EB3	1-5/8"	D	23.98	15.08	8.89	YES	NO	1094	173
85702	EB3	EB3	1-5/8"	D	23.76	15.85	7.91	YES	YES	1093	825
87006	EB3	EB3	2-1/16"	E	23.75	15.25	8.5	YES	YES	1158	272
85736	EB3	EB3	1-5/8"	D	23.61	15.2	8.41	YES	YES	1155	352
87002	EB3	EB3	2-1/16"	E	23.5	15.41	8.09	YES	YES	879	203
89420	EB3	EB3	1-5/8"	G	22.8	14.8	8	YES	NO	862‡	258

* Damping force, in pounds, to either extend or collapse the shock absorber at an average operating velocity. Fuerza de amortiguación en libras para extender o comprimir el amortiguador a una velocidad de operación promedio. La puissance d'amortissement en poids de l'amortisseur, soit comprimé, doit détendu, à une vitesse de fonctionnement moyenne.

† At bumper contact / Al contacto cone el tope de goma / Au contact avec le butoir

‡ For GasSLX Series, forces are at the "Firm" (F) setting. / Para la serie GasSLX, fas fuerzas estan adjustada en (F) "Firme". / Pour la série GasSLX, le réglage de la force est sur «Ferme» (F)

SPECIFICATIONS BY END MOUNT
ESPECIFICACIONES POR TIPO DE MONTAJE
SPÉCIFICATIONS PAR FIXATION DES EXTRÉMITÉS

Gabriel	Mounting		Bore	External Diameter Illustration	Lengths			Dust Tube	Recoil Cutoff	Controls*	
	Upper	Lower			Extended	Collapsed	Stroke			Rebound	Compression
83217	EB3	EB3	1-3/8"	A	22.77	14.49	8.28	YES	YES	633	159
85302	EB3	EB3	1-5/8"	D	22.75	14.61	8.14	YES	NO	836	253
85304	EB3	EB3	1-5/8"	D	22.25	14.22	8.03	YES	NO	767	325
85718	EB3	EB3	1-5/8"	D	22.13	15.04	7.09	YES	YES	2506	206
85732	EB3	EB3	2-1/16"	E	22.13	15.11	7.03	YES	YES	2632	382
85716	EB3	EB3	1-5/8"	D	21.99	14.33	7.66	YES	YES	1220	175
87001	EB3	EB3	2-1/16"	E	20.76	13.76	7	YES	YES	1158	190
85734	EB3	EB3	1-5/8"	D	20.73	13.7	7.03	YES	YES	1288	227
85004	EB3	EB3	1-5/8"	C	20.68	13.67	7.01	YES	YES	1019	219
85042	EB3	EB3	1-5/8"	C	20.64	13.61	7.03	YES	YES	333	161
85712	EB3	EB3	1-5/8"	D	20.5	13.47	7.04	YES	YES	1435	562
85720	EB3	EB3	1-5/8"	D	20.5	13.47	7.03	YES	YES	1435	562
85968	EB3	EB3	1-5/8"	G	19.87	13.39	6.48	YES	YES	1069	227
83214	EB3	EB3	1-3/8"	A	19.64	12.86	6.78	YES	YES	269	90
89419	EB3	EB3	1-5/8"	G	18.04	12.67	5.36	YES	YES	1352‡	636
85300	EB3	EB3	1-5/8"	D	17.98	12.21	5.78	YES	YES	1435	676
85719	EB3	EB3	1-5/8"	D	17.25	11.97	5.28	YES	YES	1517	213
85334	EB3	EB3	1-5/8"	D	14.52	10.48	4.04	YES	YES	1271	319
85912	EB3	ES36	1-5/8"	G	18.68	12.57	6.11	YES	YES	1020	219
85327	EB3	ES160	1-5/8"	D	16.01	12.1	3.91	YES	YES	764	162
85322	EB3	ES160	1-5/8"	D	15.26	11.85	3.41	YES	YES	764	162
83353	EB3	S21	1-3/8"	B	24.84	15.06	9.78	YES	NO	432	214
85740	EB3	S21	1-5/8"	D	24.7	15.15	9.55	YES	YES	848	305
85380	EB3	S21	1-5/8"	D	23.95	14.79	9.15	YES	YES	1568	227
85312	EB3	S21	1-5/8"	D	23.68	14.8	8.88	YES	YES	717	111
85733	EB3	S21	1-5/8"	D	23.57	14.73	8.84	YES	YES	717	111
85379	EB3	S21	1-5/8"	D	22.69	14.4	8.29	YES	YES	1658	176
85330	EB3	S21	1-5/8"	D	22.44	14.16	8.28	YES	YES	1140	176
85729	EB3	S21	1-5/8"	D	21.55	13.77	7.78	YES	YES	783	111
85723	EB3	S21	1-5/8"	D	19.93	12.9	7.03	YES	YES	1318	248
83117	EB4	EB1	1-3/8"	A	23.98	14.47	9.51	YES	NO	354	300
G63183	EB4	EB4	1-3/8"		20.79	13.01	7.78				
83119	EB4	ES165	1-3/8"	A	23.96	14.84	9.12	YES	NO	354	300
83303	EB7	ES36	1-3/8"	B	24.86	15.08	9.78	YES	YES	470	122
83304	EB7	ES36	1-3/8"	B	22.86	14.08	8.78	YES	YES	470	122
G63605	EB19	ES27	1-3/8"		24.24	14.71	9.53				
83002	ES10	ES10	1-3/8"	A	11.65	8.66	3	YES	YES	3112	590

* Damping force, in pounds, to either extend or collapse the shock absorber at an average operating velocity. Fuerza de amortiguación en libras para extender o comprimir el amortiguador a una velocidad de operación promedio. La puissance d'amortissement en poids de l'amortisseur, soit comprimé, doit détendu, à une vitesse de fonctionnement moyenne.

† At bumper contact / Al contacto cone el tope de goma / Au contact avec le butoir

‡ For GasSLX Series, forces are at the "Firm" (F) setting. / Para la serie GasSLX, fas fuerzas estan adjustada en (F) "Firme". / Pour la série GasSLX, le réglage de la force est sur «Ferme» (F)

SPECIFICATIONS BY END MOUNT
ESPECIFICACIONES POR TIPO DE MONTAJE
SPÉCIFICATIONS PAR FIXATION DES EXTRÉMITÉS

Gabriel	Mounting		Bore	External Diameter Illustration	Lengths			Dust Tube	Recoil Cutoff	Controls*	
	Upper	Lower			Extended	Collapsed	Stroke			Rebound	Compression
83024	ES10	ES10	1-3/8"	2-1/2" D/T	11.65	8.66	3	YES	YES	811	320
83031	ES10	ES10	1-3/8"	2-1/2" D/T	11.54	8.66	2.88	YES	YES	811	314
83016	ES10	ES10	1"	1-5/8"	11.51	8.14	3.37	NO	YES	506	139
83021	ES10	ES10	1-3/8"	A	9.41	7.4	2.01	YES	YES	745	315
83051	ES10	ES10	1-3/8"	2-1/2" D/T	9.41	7.4	2.01	YES	YES	579	163
83061	ES10	ES10	1-3/8"	2-1/2" D/T	9.41	7.4	2.01	YES	YES	1030	220
83046	ES10	ES181	1-3/16"		9.23†	7.62†	2.73	NO	YES	514	173
83023	ES10	ES181	1"	1-5/8"	8.7	7.09†	2.14	NO	YES	484	157
G64042	ES18	ES18	1-3/8"		14.92	10.55	4.37				
83045	ES19	S10	1-3/8"	A	11.53†	8.58†	3.81	YES	N0	510	153
83050	ES19	S10	1-3/8"	A	10.43†	8.38†	2.9	YES	YES	599	321
83058	ES19	S10	1-3/8"	A	10.43†	8.38†	2.9	YES	YES	742	243
83909	ES20	ES211	1-3/8"	A	9.45	7.33	2.12	YES	YES	646	180
83158	ES22	ES22	1-3/8"	A	12.96	8.97	4	YES	NO	783	484
G63306	ES24	ES24	1-3/8"		19.85	12.57	7.28				
G63357	ES24	ES24	1-3/8"		14.98	9.95	5.03				
83022	ES24	ES24	1"	2" D/T	14.28	9.33	4.95	YES	NO	840	152
83010	ES24	ES24	1"	2" D/T	14.15†	9.33	5.07	YES	YES	188	70
83026	ES24	ES24	1-3/8"	A	13.11	9.12	3.99	YES	YES	602	104
83027	ES24	S10	1-3/8"	A	13.82	9.2	4.61	YES	YES	602	104
83018	ES24	S10	1-3/8"	A	10.3†	8.42†	3.24	YES	YES	515	174
83019	ES24	S10	1-3/8"	A	9.48	8.21†	2.29	YES	YES	509	121
G63403	ES26	ES26	1-3/8"		24.58	14.8	9.78				
83908	ES27	ES91	1-3/8"	A	9.3	7.03	2.27	YES	NO	904	279
83044	ES27	ES164	1-3/8"	A	10.91	7.93	2.98	YES	YES	789	296
G63347	ES31	ES35	1-3/8"		18.08	11.55	6.53				
G63675	ES34	ES34	1-3/8"		26.86	16.08	10.78				
G64013	ES34	ES34	1-3/8"		26.52	16.33	10.19				
G64121	ES34	ES34	1-3/8"		25.35	16.17	9.18				
G64149	ES34	ES34	1-3/8"		24.57	16.14	8.43				
G63366	ES34	ES34	1-3/8"		23.26	14.23	9.03				
G63866	ES34	ES34	1-3/8"		22.81	14.12	8.69				
83153	ES34	ES34	1-3/8"	A	21.69	13.62	8.07	YES	YES	974	206
83155	ES34	ES34	1-3/8"	A	21.69	13.62	8.07	YES	YES	507	80
83059	ES35	ES35	1-3/8"	A	12.06†	8.68	3.88	YES	YES	738	350
83004	ES35	ES136	1"	2" D/T	9.36†	7.29	2.32	YES	YES	539	324
85905	ES36	EB3	1-5/8"	G	23.81	16.16	7.66	YES	YES	1020	219

* Damping force, in pounds, to either extend or collapse the shock absorber at an average operating velocity. Fuerza de amortiguación en libras para extender o comprimir el amortiguador a una velocidad de operación promedio. La puissance d'amortissement en poids de l'amortisseur, soit comprimé, doit détendu, à une vitesse de fonctionnement moyenne.

† At bumper contact / Al contacto cone el tope de goma / Au contact avec le butoir

‡ For GasSLX Series, forces are at the "Firm" (F) setting. / Para la serie GasSLX, fas fuerzas estan adjustada en (F) "Firme". / Pour la série GasSLX, le réglage de la force est sur «Ferme» (F)

SPECIFICATIONS BY END MOUNT
ESPECIFICACIONES POR TIPO DE MONTAJE
SPÉCIFICATIONS PAR FIXATION DES EXTRÉMITÉS

Gabriel	Mounting		Bore	External Diameter Illustration	Lengths			Dust Tube	Recoil Cutoff	Controls*	
	Upper	Lower			Extended	Collapsed	Stroke			Rebound	Compression
85913	ES36	EB3	1-5/8"	G	22.56	15.2	7.36	YES	YES	1020	219
85057	ES36	EB3	1-5/8"	C	21.45	14.23	7.22	YES	YES	1216	115
85907	ES36	EB3	1-5/8"	G	21.43	14.2	7.23	YES	YES	1216	251
83113	ES36	EB3	1-3/8"	A	20.47	13.46	7.01	YES	YES	997	238
85059	ES36	EB3	1-5/8"	C	19.09	12.8	6.29	YES	YES	928	151
85915	ES36	EB3	1-5/8"	G	19.06	12.7	6.36	YES	YES	1020	219
83115	ES36	EB3	1-3/8"	A	16.19	13.32	4.87	YES	YES	997	238
83242	ES36	ES36	1-3/8"	A	33.73	20.98	12.75	YES	YES	721	135
85903	ES36	ES36	1-5/8"	G	31.99	19.13	12.86	YES	YES	666	113
85979	ES36	ES36	1-5/8"	G	31.18	18.66	12.52	YES	YES	582	138
85972	ES36	ES36	1-5/8"	G	30.78	18.26	12.52	YES	NO	1493	261
83121	ES36	ES36	1-3/8"	A	30.25	18.32	11.93	YES	YES	689	126
83137	ES36	ES36	1-3/8"	A	30.04	17.79	12.25	YES	YES	517	132
85976	ES36	ES36	1-5/8"	G	29.92	18.12	11.8	YES	YES	582	138
85013	ES36	ES36	1-5/8"	C	29.79	17.76	12.04	YES	YES	1019	219
83205	ES36	ES36	1-3/8"	A	29.69	17.69	12	YES	YES	660	76
89414	ES36	ES36	1-5/8"	G	29.65	18.18	11.46	YES	YES	1045‡	217
83209	ES36	ES36	1-3/8"	A	29.64	17.61	12.03	YES	YES	670	78
85337	ES36	ES36	1-5/8"	D	28.72	17.44	11.28	YES	YES	1318	374
85006	ES36	ES36	1-5/8"	C	28.54	17.13	11.41	YES	YES	1019	219
83125	ES36	ES36	1-3/8"	A	28.15	17.16	10.99	YES	YES	625	115
85097	ES36	ES36	1-5/8"	C	27.95	17.11	10.84	YES	YES	1086	109
85043	ES36	ES36	1-5/8"	C	27.63	16.85	10.78	YES	YES	628	163
85904	ES36	ES36	1-5/8"	G	27.61	16.88	10.73	YES	YES	666	113
85010	ES36	ES36	1-5/8"	C	26.8	16.26	10.54	YES	YES	1019	219
83123	ES36	ES36	1-3/8"	A	26.65	16.41	10.24	YES	YES	589	119
83176	ES36	ES36	1-3/8"	A	26.62	15.96	10.66	NO	NO	406	275
85036	ES36	ES36	1-5/8"	C	26.38	16.29	10.09	YES	YES	633	119
89405	ES36	ES36	1-5/8"	G	26.3	16.57	9.73	YES	YES	1009‡	249
85099	ES36	ES36	1-5/8"	C	26.02	15.93	10.09	YES	YES	1152	135
85974	ES36	ES36	1-5/8"	G	26.02	16.11	9.91	YES	YES	3087	230
85321	ES36	ES36	1-5/8"	D	25.38	15.59	9.79	YES	YES	1435	676
83122	ES36	ES36	1-3/8"	A	25.28	15.79	9.49	YES	YES	661	201
83149	ES36	ES36	1-3/8"	A	25.28	15.78	9.49	YES	YES	332	101
83218	ES36	ES36	1-3/8"	A	25.19	15.44	9.75	YES	YES	721	194
665472	ES36	ES36	1-5/8"	G	25.14	15.61	9.53	NO	NO	925	977
85005	ES36	ES36	1-5/8"	C	24.76	15.24	9.52	YES	YES	1019	219

* Damping force, in pounds, to either extend or collapse the shock absorber at an average operating velocity. Fuerza de amortiguación en libras para extender o comprimir el amortiguador a una velocidad de operación promedio. La puissance d'amortissement en poids de l'amortisseur, soit comprimé, doit détendu, à une vitesse de fonctionnement moyenne.

† At bumper contact / Al contacto cone el tope de goma / Au contact avec le butoir

‡ For GasSLX Series, forces are at the "Firm" (F) setting. / Para la serie GasSLX, fas fuerzas estan adjustada en (F) "Firme". / Pour la série GasSLX, le réglage de la force est sur «Ferme» (F)

SPECIFICATIONS BY END MOUNT
ESPECIFICACIONES POR TIPO DE MONTAJE
SPÉCIFICATIONS PAR FIXATION DES EXTRÉMITÉS

Gabriel	Mounting		Bore	External Diameter Illustration	Lengths			Dust Tube	Recoil Cutoff	Controls*	
	Upper	Lower			Extended	Collapsed	Stroke			Rebound	Compression
89406	ES36	ES36	1-5/8"	G	24.76	15.82	8.93	YES	YES	658‡	125
85916	ES36	ES36	1-5/8"	G	24.65	15.55	9.1	YES	YES	1149	219
89430	ES36	ES36	1-5/8"	G	24.61	15.66	8.94	YES	YES	1462‡	279
83126	ES36	ES36	1-3/8"	A	24.41	15.27	9.14	YES	YES	625	115
85909	ES36	ES36	1-5/8"	G	24.25	15.19	9.06	YES	YES	700	255
85975	ES36	ES36	1-5/8"	G	24.24	15.15	9.09	YES	YES	1658	219
83310	ES36	ES36	1-3/8"	B	24.06	14.69	9.37	YES	NO	559	153
85030	ES36	ES36	1-5/8"	C	24.05	14.89	9.16	YES	YES	1019	219
83221	ES36	ES36	1-3/8"	A	24.01	14.73	9.28	YES	YES	599	153
89440	ES36	ES36	1-5/8"	G	23.9	15.31	8.59	YES	YES	1498‡	561
83144	ES36	ES36	1-3/8"	A	23.78	15.03	8.74	YES	YES	596	93
89432	ES36	ES36	1-5/8"	G	23.42	14.79	8.63	YES	NO	1507‡	561
85050	ES36	ES36	1-5/8"	C	23.28	14.5	9.03	YES	NO	525	138
665937	ES36	ES36	1-5/8"	G	22.91	16.09	6.82	YES	NO		
85058	ES36	ES36	1-5/8"	C	22.67	14.26	8.41	YES	YES	722	114
85044	ES36	ES36	1-5/8"	C	22.63	14.1	8.53	YES	NO	722	212
85971	ES36	ES36	1-5/8"	G	22.56	14.17	8.39	YES	NO	2315	451
85919	ES36	ES36	1-5/8"	G	22.52	14.33	8.19	YES	YES	1265	121
646155	ES36	ES36	1-3/16"		22.45	14.1	8.35	YES	NO		
646177	ES36	ES36	1-3/16"		22.45	14.1	8.35	NO	NO		
89431	ES36	ES36	1-5/8"	G	22.41	14.16	8.25	YES	NO	751‡	211
85345	ES36	ES36	1-5/8"	D	21.83	13.82	8.01	YES	YES	1093	219
85906	ES36	ES36	1-5/8"	G	21.77	14.05	7.72	YES	YES	700	255
85014	ES36	ES36	1-5/8"	C	21.76	13.74	8.02	YES	YES	1019	219
83124	ES36	ES36	1-3/8"	A	21.65	13.77	7.88	YES	YES	750	137
83207	ES36	ES36	1-3/8"	A	21.64	13.61	8.03	YES	YES	553	143
89407	ES36	ES36	1-5/8"	G	21.61	14.17	7.45	YES	YES	652‡	218
85091	ES36	ES36	1-5/8"	C	21.38	13.56	7.82	YES	NO	1121	331
85910	ES36	ES36	1-5/8"	G	20.79	13.54	7.25	YES	YES	1074	219
85029	ES36	ES36	1-5/8"	C	20.54	13.11	7.43	YES	YES	1019	219
85382	ES36	ES36	1-5/8"	D	20.22	13.07	7.15	YES	YES	1658	420
83127	ES36	ES36	1-3/8"	A	20.16	13.14	7.01	YES	YES	940	218
83204	ES36	ES36	1-3/8"	A	20.14	12.86	7.28	YES	YES	451	110
89437	ES36	ES36	1-5/8"	G	20.12	13.42	6.7	YES	YES	1155‡	514
85060	ES36	ES36	1-5/8"	C	19.79	12.76	7.04	YES	YES	943	405
85338	ES36	ES36	1-5/8"	D	19.47	12.68	6.79	YES	YES	1664	420
85051	ES36	ES36	1-5/8"	C	18.54	12.13	6.41	YES	YES	1019	139
85908	ES36	ES36	1-5/8"	G	18.48	12.25	6.23	YES	YES	1020	219

* Damping force, in pounds, to either extend or collapse the shock absorber at an average operating velocity. Fuerza de amortiguación en libras para extender o comprimir el amortiguador a una velocidad de operación promedio. La puissance d'amortissement en poids de l'amortisseur, soit comprimé, doit détendu, à une vitesse de fonctionnement moyenne.

† At bumper contact / Al contacto cone el tope de goma / Au contact avec le butoir

‡ For GasSLX Series, forces are at the "Firm" (F) setting. / Para la serie GasSLX, fas fuerzas estan adjustada en (F) "Firme". / Pour la série GasSLX, le réglage de la force est sur «Ferme» (F)

SPECIFICATIONS BY END MOUNT
ESPECIFICACIONES POR TIPO DE MONTAJE
SPÉCIFICATIONS PAR FIXATION DES EXTRÉMITÉS

Gabriel	Mounting		Bore	External Diameter Illustration	Lengths			Dust Tube	Recoil Cutoff	Controls*	
	Upper	Lower			Extended	Collapsed	Stroke			Rebound	Compression
83130	ES36	ES36	1-3/8"	A	18.03	12.04	5.99	YES	YES	871	177
85934	ES36	ES36	1-5/8"	G	17.8	12.04	5.75	YES	YES	3511	1063
85086	ES36	ES36	1-5/8"	C	17.55	11.63	5.92	YES	YES	2027	389
85738	ES36	ES36	1-5/8"	D	17.46	11.69	5.77	YES	YES	1830	416
85323	ES36	ES36	1-5/8"	D	17.36	11.58	5.78	YES	YES	1085	163
87018	ES36	ES36	2-1/16"	E	17.36	11.71	5.65	YES	YES	2479	1000
83389	ES36	ES36	1-3/8"	A	17.32	11.57	5.75	YES	YES	1084	228
85000	ES36	ES36	1-5/8"	C	17.28	11.5	5.78	YES	YES	1019	219
89436	ES36	ES36	1-5/8"	G	17.24	12.04	5.2	YES	YES	998‡	217
83203	ES36	ES36	1-3/8"	A	17.1	11.36	5.74	YES	YES	609	114
83128	ES36	ES36	1-3/8"	A	16.89	11.53	5.36	YES	YES	940	218
85911	ES36	ES36	1-5/8"	G	16.89	11.53	5.36	YES	YES	1020	219
83363	ES36	ES36	1-3/8"	A	16.46	11.35	5.11	YES	YES	1084	201
85938	ES36	ES36	1-5/8"	G	16.06	10.82	5.24	YES	YES	1581	432
85064	ES36	ES36	1-5/8"	C	16.02	10.75	5.27	YES	YES	1481	340
83150	ES36	ES36	1-3/8"	A	15.24	10.43	4.81	YES	YES	940	216
85078	ES36	ES36	1-5/8"	C	14.76	10.12	4.64	YES	YES	1409	282
85045	ES36	ES36	1-5/8"	C	14.52	10.12	4.4	YES	YES	1020	219
85939	ES36	ES36	1-5/8"	G	14.44	10.04	4.41	YES	YES	1719	420
85914	ES36	ES36	1-5/8"	G	14.36	10.25	4.11	YES	YES	1020	219
85052	ES36	ES36	1-5/8"	C	13.26	9.49	3.77	YES	YES	1429	335
85344	ES36	ES36	1-5/8"	D	13.22	9.45	3.77	YES	YES	1581	443
85079	ES36	ES36	1-5/8"	C	12.04	8.87	3.17	YES	YES	1494	325
83157	ES36	ES90	1-3/8"	A	26.38	15.76	10.61	YES	NO	446	303
85102	ES36	ES136	1-5/8"	C	21.52	14.93	6.59	YES	YES	1224	342
83164	ES36	ES165	1-3/8"	C	24.22	14.59	9.63	YES	NO	426	274
85072	ES36	ES176	1-5/8"	C	24.17	14.81	9.36	YES	YES	1387	305
85087	ES36	ES176	1-5/8"	C	22.78	14.7	8.08	YES	YES	1568	403
85109	ES36	ES195	1-5/8"	C	24.21	15.14	9.07	YES	YES	1123	149
83635	ES36	S21	1-3/8"	A	21.74	13.25	8.49	YES	NO	558	119
85977	ES36	S42	1-5/8"	G	26.2	15.91	10.29	YES	YES	582	138
83109	ES36	S42	1-3/8"	A	26.17	15.93	10.24	YES	YES	345	78
83111	ES36	S42	1-3/8"	A	26.17	15.93	10.24	YES	YES	560	141
83138	ES36	S42	1-3/8"	A	23.55	14.42	9.12	YES	YES	997	231
83110	ES36	S42	1-3/8"	A	22.94	14.31	8.63	YES	YES	450	143
83112	ES36	S42	1-3/8"	A	21.52	13.41	8.11	YES	YES	1064	343
83033	ES53	ES53	1-3/8"	A	13.99	10.37	3.62	YES	YES	494	312

* Damping force, in pounds, to either extend or collapse the shock absorber at an average operating velocity. Fuerza de amortiguación en libras para extender o comprimir el amortiguador a una velocidad de operación promedio. La puissance d'amortissement en poids de l'amortisseur, soit comprimé, doit détendu, à une vitesse de fonctionnement moyenne.

† At bumper contact / Al contacto cone el tope de goma / Au contact avec le butoir

‡ For GasSLX Series, forces are at the "Firm" (F) setting. / Para la serie GasSLX, fas fuerzas estan adjustada en (F) "Firme". / Pour la série GasSLX, le réglage de la force est sur «Ferme» (F)

SPECIFICATIONS BY END MOUNT
ESPECIFICACIONES POR TIPO DE MONTAJE
SPÉCIFICATIONS PAR FIXATION DES EXTRÉMITÉS

Gabriel	Mounting		Bore	External Diameter Illustration	Lengths			Dust Tube	Recoil Cutoff	Controls*	
	Upper	Lower			Extended	Collapsed	Stroke			Rebound	Compression
G64089	ES56	ES56	1-3/8"		20.43	13.03	7.4				
G63676	ES69	ES69	1-3/8"		15.48	10.45	5.03				
83131	ES83	ES83	1-3/8"	A	27.8	18.18	9.62	YES	NO	212	129
G63455	ES83	ES83	1-3/8"		22.98	13.95	9.03				
83145	ES83	ES83	1-3/8"	A	19.93	12.32	7.54	YES	NO	479	153
83911	ES85	EB1	1-3/8"	A	10.45†	8.41†	2.99	YES	YES	991	321
83906	ES85	EB1	1-3/8"	2-1/2" D/T	10.45†	8.41†	3.01	YES	YES	586	320
83048	ES86	ES167	1-3/8"	A	9.97	8.43†	2.37	YES	YES	904	415
83028	ES86	ES167	1-3/8"	A	9.96	7.6	2.33	YES	YES	445	531
83905	ES86	ES167	1-3/8"	2-1/2" D/T	9.3†	7.81†	2.21	YES	YES	1105	170
85639	ES90	ES36	1-5/8"	G	27.08	17.79	9.29	YES	NO	795	109
85963	ES90	ES36	1-5/8"	G	25.49	18.68	6.81	YES	YES	1490	206
85964	ES90	ES36	1-5/8"	G	25.49	18.68	6.81	YES	YES	1981	205
85995	ES90	ES36	1-5/8"	G	23.5	14.52	8.98	YES	NO	1830	173
85994	ES90	ES36	1-5/8"	G	21.21	13.4	7.81	YES	NO	1824	263
85637	ES90	ES36	1-5/8"	G	20.74	13.19	7.55	YES	NO	2256	327
85954	ES90	ES36	1-5/8"	G	20.43	13	7.43	YES	NO	1812	148
85924	ES90	ES36	1-5/8"	G	20.39	12.99	7.41	YES	NO	1036	122
89457	ES90	ES36	1-5/8"	G	19.92	13.02	6.89	YES	NO	941‡	156
85969	ES90	ES36	1-5/8"	G	18.38	11.93	6.45	YES	NO	1612	125
83180	ES90	ES83	1-3/8"		30.2	21.24	8.96	YES	NO	909	204
83364	ES90	ES83	1-3/8"	A	24.06	15.07	8.99	YES	YES	855	206
83146	ES90	ES83	1-3/8"	A	24.02	14.68	9.33	YES	YES	479	119
85082	ES90	ES90	1-5/8"	C	28.6	20.64	7.97	YES	YES	1435	266
83636	ES90	ES90	1-3/8"	A	27.72	16.95	10.77	YES	YES	505	148
83100	ES90	ES90	1-3/8"	A	26.6	16.11	10.49	YES	YES	481	142
85926	ES90	ES90	1-5/8"	G	26.5	17.96	8.54	YES	YES	1387	279
85656	ES90	ES90	1-5/8"	G	26.49	16.94	9.55	YES	YES	1225	274
85953	ES90	ES90	1-5/8"	G	26.13	15.86	10.27	YES	NO	2001	153
85003	ES90	ES90	1-5/8"	C	25.42	15.63	9.79	YES	YES	437	182
89411	ES90	ES90	1-5/8"	G	25.39	16.06	9.34	YES	YES	436‡	186
85927	ES90	ES90	1-5/8"	G	24.76	15.47	9.3	YES	YES	1288	388
83101	ES90	ES90	1-3/8"	A	24.63	15.13	9.49	YES	YES	481	142
85998	ES90	ES90	1-5/8"	G	22.83	14.17	8.66	YES	NO	1345	178
85925	ES90	ES90	1-5/8"	G	22.56	15.6	6.95	YES	NO	761	144
85648	ES90	ES90	1-5/8"	G	22.28	13.97	8.31	YES	NO	761	247
85957	ES90	ES90	1-5/8"	G	20.78	13.19	7.6	YES	NO	1583	138

* Damping force, in pounds, to either extend or collapse the shock absorber at an average operating velocity. Fuerza de amortiguación en libras para extender o comprimir el amortiguador a una velocidad de operación promedio. La puissance d'amortissement en poids de l'amortisseur, soit comprimé, doit détendu, à une vitesse de fonctionnement moyenne.

† At bumper contact / Al contacto cone el tope de goma / Au contact avec le butoir

‡ For GasSLX Series, forces are at the "Firm" (F) setting. / Para la serie GasSLX, fas fuerzas estan adjustada en (F) "Firme". / Pour la série GasSLX, le réglage de la force est sur «Ferme» (F)

SPECIFICATIONS BY END MOUNT
ESPECIFICACIONES POR TIPO DE MONTAJE
SPÉCIFICATIONS PAR FIXATION DES EXTRÉMITÉS

Gabriel	Mounting		Bore	External Diameter Illustration	Lengths			Dust Tube	Recoil Cutoff	Controls*	
	Upper	Lower			Extended	Collapsed	Stroke			Rebound	Compression
85928	ES90	ES90	1-5/8"	G	20.31	13.24	7.07	YES	NO	957	229
85929	ES90	ES90	1-5/8"	G	20.28	13.21	7.08	YES	NO	2214	267
85999	ES90	ES90	1-5/8"	G	19.84	12.79	7.05	YES	NO	2214	259
83135	ES90	ES90	1-3/8"	A	19.49	12.38	7.11	YES	NO	519	121
83167	ES90	ES90	1-3/8"	A	19.49	12.38	7.11	YES	NO	285	90
83156	ES90	ES90	1-3/8"	A	18.55	11.91	6.64	YES	NO	778	135
83169	ES90	ES90	1-3/8"	A	18.55	11.91	6.64	YES	NO	599	171
83020	ES91	ES91	1-3/8"	A	9.41	7.17	2.24	YES	YES	796	255
83034	ES115	ES115	1-3/16"	1-5/8"	10.04†	7.32	2.97	NO	YES	430	129
83634	ES120	ES120	1-3/8"	A	27.48	16.23	11.25	YES	YES	779	157
85011	ES120	ES121	1-5/8"	C	27.49	16.46	11.03	YES	NO	1268	186
85122	ES120	S21	1-5/8"	C	22.22	13.78	8.44	YES	YES	926	162
83120	ES120	S21	1-3/8"	A	22.17	13.66	8.51	YES	YES	779	164
85123	ES120	S21	1-5/8"	C	21.49	13.26	8.23	YES	NO	1809	246
83154	ES120	S21	1-3/8"	A	20.78	12.72	8.06	YES	YES	599	140
83081	ES126	ES172	1-3/8"	A	13.39	9.98†	4	YES	YES	1004	232
83160	ES128	ES36	1-3/8"	A	24.31	14.9	9.37	YES	YES	920	161
83174	ES128	ES36	1-3/8"	A	24.31	14.9	9.37	YES	YES	795	160
85650	ES136	ES34	1-5/8"	G	24.88	16.35	8.53	YES	NO	941	463
83008	ES136	ES136	1-3/8"	A	13†	10.13†	4	YES	YES	699	307
83056	ES136	ES136	1-5/8"	C	11.53	8.63	2.89	YES	YES	3830	737
83042	ES136	ES136	1-3/8"	A	9.89†	8.52†	2.39	YES	YES	954	541
83030	ES136	ES136	1-3/8"	A	9.61†	7.61	2.5	YES	YES	308	87
85026	ES136	S21	1-5/8"	C	23.02	14.01	9.01	YES	NO	1079	539
89417	ES136	S21	1-5/8"	G	22.94	14.31	8.63	YES	NO	1226‡	515
83907	ES147	ES147	1-3/8"	A	14.97	10.61	4.36	YES	YES	460	365
83047	ES149	EB1	1-3/8"	A	11.78†	9.74†	3	YES	YES	364	314
83006	ES149	EB1	1-3/8"	A	10.71	8.52†	2.78	YES	YES	525	182
83001	ES149	EB1	1-3/8"	A	10.45†	8.41†	3	YES	YES	793	363
83038	ES149	EB1	1-3/8"	A	10.45†	8.41†	3	YES	YES	336	242
83017	ES149	ES149	1-3/8"	A	10.95	8.41†	3.13	YES	YES	353	138
83009	ES149	ES149	1-3/8"	A	10.45†	8.41†	3	YES	YES	793	363
83039	ES149	ES149	1-3/8"	A	10.44†	8.4†	3	YES	YES	876	326
83064	ES149	ES149	1-3/8"	A	10.41†	8.36†	2.99	YES	YES	635	323
85090	ES150	ES36	1-5/8"	C	25.31	15.52	9.79	YES	YES	943	99
85180	ES150	ES36	1-5/8"	C	20.94	13.83	7.11	YES	YES	681	283
85181	ES150	ES150	1-5/8"	C	26.33	17.06	9.27	YES	YES	681	285

* Damping force, in pounds, to either extend or collapse the shock absorber at an average operating velocity. Fuerza de amortiguación en libras para extender o comprimir el amortiguador a una velocidad de operación promedio. La puissance d'amortissement en poids de l'amortisseur, soit comprimé, doit détendu, à une vitesse de fonctionnement moyenne.

† At bumper contact / Al contacto cone el tope de goma / Au contact avec le butoir

‡ For GasSLX Series, forces are at the "Firm" (F) setting. / Para la serie GasSLX, fas fuerzas estan adjustada en (F) "Firme". / Pour la série GasSLX, le réglage de la force est sur «Ferme» (F)

SPECIFICATIONS BY END MOUNT
ESPECIFICACIONES POR TIPO DE MONTAJE
SPÉCIFICATIONS PAR FIXATION DES EXTRÉMITÉS

Gabriel	Mounting		Bore	External Diameter Illustration	Lengths			Dust Tube	Recoil Cutoff	Controls*	
	Upper	Lower			Extended	Collapsed	Stroke			Rebound	Compression
89449	ES150	ES150	1-5/8"	G	23.25	14.9	8.35	YES	NO	1519‡	324
85918	ES150	ES150	1-5/8"	G	22.97	14.58	8.39	YES	NO	1726	412
85958	ES150	ES150	1-5/8"	G	22.89	14.5	8.39	YES	YES	1926	281
89503	ES150	ES150	1-5/8"	G	21.28	13.72	7.56	YES	NO	1033‡	123
85106	ES150	ES150	1-5/8"	C	20.03	12.89	7.14	YES	YES	1054	109
85119	ES150	ES150	1-5/8"	C	21.39	13.81	7.68	YES	YES	1387	185
85922	ES150	ES150	1-5/8"	G	21.19	13.53	7.66	YES	NO	878	185
85920	ES150	ES150	1-5/8"	G	21.16	13.57	7.59	YES	NO	845	49
85959	ES150	ES150	1-5/8"	G	21.16	13.57	7.59	YES	YES	1021	123
85092	ES150	S21	1-5/8"	C	21.95	15.04	6.89	YES	YES	1597	138
83066	ES153	ES153	1-3/8"	A	11.15†	9.2†	2.78	YES	YES	599	221
83901	ES153	ES153	1-3/8"	A	11.15†	9.2†	2.78	YES	YES	509	204
85984	ES158	ES150	1-5/8"	G	25.44	15.96	9.48	YES	YES	2248	1168
85125	ES158	ES159	1-5/8"	C	26.9	16.64	10.26	YES	YES	1479	183
85724	ES158	ES159	1-5/8"	D	22.81	14.51	8.3	YES	YES	1235	454
89443	ES158	ES159	1-5/8"	G	22.19	14.66	7.53	YES	YES	1206‡	466
85331	ES158	ES159	1-5/8"	D	19.62	12.85	6.77	YES	YES	1757	396
85335	ES158	ES159	1-5/8"	D	19.62	12.85	6.77	YES	YES	827	107
85126	ES158	S21	1-5/8"	C	21.76	13.63	8.13	YES	YES	1086	215
87019	ES160	ES160	2-1/16"	E	24.84	15.85	8.9	YES	YES	2972	665
87017	ES160	ES160	2-1/16"	E	23.35	15.31	8.07	YES	YES	1876	220
89461	ES160	ES160	1-5/8"	G	19.96	13.58	6.38	YES	YES	897‡	103
85188	ES161	ES162	1-5/8"	C	25.31	15.52	9.79	YES	YES	1074	255
85088	ES161	ES162	1-5/8"	C	25.31	15.52	9.79	YES	YES	616	178
85061	ES161	ES162	1-5/8"	C	24.76	15.25	9.51	YES	YES	1216	195
85066	ES161	ES162	1-5/8"	C	24.64	15.25	9.39	YES	YES	812	322
85098	ES161	ES162	1-5/8"	C	24.64	15.24	9.4	YES	YES	747	158
89448	ES161	ES162	1-5/8"	G	24.61	15.66	8.94	YES	YES	782‡	323
89450	ES161	ES162	1-5/8"	G	24.61	15.66	8.94	YES	YES	1282‡	193
89502	ES161	ES162	1-5/8"	G	24.61	15.66	8.94	YES	YES	1240‡	300
85065	ES161	S21	1-5/8"	C	28.05	17	11.05	YES	YES	1059	300
85083	ES162	S42	1-5/8"	C	27.81	16.53	11.28	YES	YES	1429	184
83142	ES162	S42	1-3/8"	A	23.92	14.49	9.43	YES	YES	367	131
83143	ES162	S42	1-3/8"	A	21.92	13.51	8.41	YES	YES	403	137
83025	ES163	ES163	1-3/8"	A	8.02	6.53	1.48	YES	YES	710	230
83049	ES163	ES163	1-3/8"	A	8.02	6.53	1.48	YES	YES	2879	705
83032	ES163	ES163	1-3/8"	A	7.85	6.36	1.49	NO	YES	779	135

* Damping force, in pounds, to either extend or collapse the shock absorber at an average operating velocity. Fuerza de amortiguación en libras para extender o comprimir el amortiguador a una velocidad de operación promedio. La puissance d'amortissement en poids de l'amortisseur, soit comprimé, doit détendu, à une vitesse de fonctionnement moyenne.

† At bumper contact / Al contacto cone el tope de goma / Au contact avec le butoir

‡ For GasSLX Series, forces are at the "Firm" (F) setting. / Para la serie GasSLX, fas fuerzas estan adjustada en (F) "Firme". / Pour la série GasSLX, le réglage de la force est sur «Ferme» (F)

SPECIFICATIONS BY END MOUNT
ESPECIFICACIONES POR TIPO DE MONTAJE
SPÉCIFICATIONS PAR FIXATION DES EXTRÉMITÉS

Gabriel	Mounting		Bore	External Diameter Illustration	Lengths			Dust Tube	Recoil Cutoff	Controls*	
	Upper	Lower			Extended	Collapsed	Stroke			Rebound	Compression
83116	ES164	ES165	1-3/8"	A	23.81	14.68	9.12	YES	NO	354	300
83118	ES164	ES90	1-3/8"	A	24.45	14.71	9.74	YES	NO	410	311
83035	ES166	ES136	1-3/8"	A	13.04†	9.33	4.22	YES	YES	320	100
83067	ES166	ES136	1-3/16"	2" D/T	12.33†	9.27	3.56	YES	YES	424	101
85670	ES175	ES175	1-5/8"	G	23.19	14.67	8.52	YES	YES	591	176
83029	ES168	ES169	1-5/8"	C	10.35	7.87	2.41	YES	NO	1303	1349
83910	ES169	ES169	1-3/8"	A	11.63†	9.35†	2.28	YES	YES	572	239
83040	ES171	ES172	1-3/8"	A	10.44†	8.4†	3	YES	YES	876	326
83057	ES171	ES172	1-3/8"	2-1/2" D/T	10.44†	8.4†	2.99	YES	YES	364	242
87015	ES173	ES173	45MM	E	15.51	11.18	4.33	YES	YES	4950	900
85737	ES173	ES173	1-5/8"	D	15.11	10.84	4.27	YES	YES	3066	782
89459	ES174	EB3	1-5/8"	G	25.63	16.14	9.49	YES	NO	1179‡	314
85070	ES174	EB3	1-5/8"	C	25.59	15.83	9.76	YES	NO	1100	310
85067	ES174	ES136	1-5/8"	C	30.54	18.15	12.39	YES	YES	676	170
89451	ES174	ES136	1-5/8"	G	30.39	18.54	11.86	YES	YES	645‡	172
85989	ES174	ES136	1-5/8"	G	20.78	13.15	7.63	YES	NO	1812	351
85084	ES174	ES136	1-5/8"	C	20.59	13.03	7.57	YES	NO	1145	407
89460	ES174	ES136	1-5/8"	G	20.58	13.03	7.55	YES	NO	997‡	384
85937	ES174	S43	1-5/8"	G	19.04	12.35	6.7	YES	YES	1479	337
85985	ES174	S43	1-5/8"	G	19.04	12.31	6.73	YES	YES	2068	723
85936	ES174	S43	1-5/8"	G	17.27	11.48	5.79	YES	YES	1479	337
89456	ES174	S43	1-5/8"	G	17.04	11.63	5.4	YES	YES	975‡	377
83063	ES175	ES136	1-3/8"	A	10.76†	9.26†	3.01	YES	YES	954	541
85955	ES175	ES150	1-5/8"	G	21.25	13.66	7.59	YES	YES	1034	397
85986	ES175	ES150	1-5/8"	G	21.25	13.66	7.59	YES	YES	1754	221
83243	ES175	ES175	1-3/8"	A	24.41	15.26	9.15	YES	YES	296	170
85120	ES175	ES175	1-5/8"	C	23.67	15.06	8.61	YES	NO	2083	519
83398	ES175	ES175	1-3/8"	A	23.23	15.38	7.85	YES	YES	293	168
85670	ES175	ES175	1-5/8"	G	23.19	14.67	8.52	YES	YES	591	176
83163	ES175	ES175	1-3/8"	A	20.75	13.01	7.74	YES	NO	828	98
83175	ES175	ES175	1-3/8"	A	20.48	13.19	7.29	YES	NO	1245	156
83397	ES175	ES175	1-3/8"	A	18.67	11.91	6.76	YES	NO	303	101
85933	ES175	ES175	1-5/8"	G	18.27	12.72	5.54	YES	YES	1089	383
89454	ES175	ES175	1-5/8"	G	18.27	12.91	5.36	YES	YES	938‡	388
85081	ES175	S21	1-5/8"	C	23.44	14.33	9.11	YES	YES	1658	250
85080	ES175	S21	1-5/8"	C	22.51	13.77	8.74	YES	NO	447	138
85031	ES176	EB2	1-5/8"	C	25.63	15.87	9.76	YES	NO	941	257

* Damping force, in pounds, to either extend or collapse the shock absorber at an average operating velocity. Fuerza de amortiguación en libras para extender o comprimir el amortiguador a una velocidad de operación promedio. La puissance d'amortissement en poids de l'amortisseur, soit comprimé, doit détendu, à une vitesse de fonctionnement moyenne.

† At bumper contact / Al contacto cone el tope de goma / Au contact avec le butoir

‡ For GasSLX Series, forces are at the "Firm" (F) setting. / Para la serie GasSLX, fas fuerzas estan adjustada en (F) "Firme". / Pour la série GasSLX, le réglage de la force est sur «Ferme» (F)

SPECIFICATIONS BY END MOUNT
ESPECIFICACIONES POR TIPO DE MONTAJE
SPÉCIFICATIONS PAR FIXATION DES EXTRÉMITÉS

Gabriel	Mounting		Bore	External Diameter Illustration	Lengths			Dust Tube	Recoil Cutoff	Controls*	
	Upper	Lower			Extended	Collapsed	Stroke			Rebound	Compression
85642	ES177	ES90	1-5/8"	G	22.52	14.52	8	YES	YES	1920	309
85923	ES177	ES161	1-5/8"	G	22.52	14.52	8	YES	YES	1940	221
85931	ES177	ES161	1-5/8"	G	22.52	14.52	8	YES	YES	1435	220
89458	ES177	ES161	1-5/8"	G	22.48	14.6	7.88	YES	YES	1575‡	222
85930	ES177	ES161	1-5/8"	G	17.86	12	5.86	YES	YES	1617	342
85932	ES178	ES150	1-5/8"	G	21.26	13.7	7.56	YES	YES	1102	430
89453	ES178	ES150	1-5/8"	G	21.14	13.93	7.21	YES	YES	860‡	435
85965	ES178	ES161	1-5/8"	G	24.24	15.15	9.09	YES	YES	2206	238
85966	ES178	ES161	1-5/8"	G	23.25	14.64	8.62	YES	YES	2206	238
85967	ES178	ES176	1-5/8"	G	23.93	14.86	9.07	YES	YES	2206	238
85961	ES178	ES176	1-5/8"	G	22.83	14.17	8.66	YES	YES	2206	240
85962	ES178	ES176	1-5/8"	G	21.8	13.66	8.15	YES	YES	2206	240
85980	ES179	ES179	1-5/8"	G	31.17	18.66	12.52	YES	YES	582	138
83148	ES179	ES179	1-3/8"	A	30	17.83	12.17	YES	YES	604	149
85978	ES179	ES179	1-5/8"	G	29.84	18.16	11.69	YES	YES	582	138
85638	ES179	ES179	1-5/8"	G	28.58	17.4	11.18	YES	YES	643	138
83147	ES179	ES179	1-3/8"	A	28.54	17.4	11.15	YES	YES	358	128
83166	ES179	ES179	1-3/8"	A	25.28	15.78	9.49	YES	YES	622	132
83168	ES179	ES179	1-3/8"	A	25.28	15.78	9.49	YES	YES	246	88
83396	ES179	ES179	1-3/8"		20.75	14.04	6.71	YES	YES	583	334
85377	ES182	ES182	1-5/8"	D	23.8	14.84	8.96	YES	YES	1937	570
85378	ES182	ES182	1-5/8"	D	23.8	14.84	8.96	YES	YES	1110	240
85956	ES183	ES184	1-5/8"	G	30.65	18.77	11.88	YES	YES	979	373
83053	ES185	ES185	1-3/8"	A	10.91	7.93	2.98	YES	YES	968	214
83054	ES185	ES185	1-3/8"	A	10.28	7.56	2.72	YES	YES	1004	184
83052	ES185	ES185	1-3/8"	2-1/2" D/T	9.41	7.19	2.23	YES	NO	1101	149
83062	ES185	S42	1-3/8"	A	12.71	9.18	3.53	YES	NO	704	153
85739	ES187	ES187	1-5/8"	D	20.73	13.54	7.19	YES	YES	3247	334
85341	ES188	S21	1-5/8"	D	30.96	18.1	12.86	YES	YES	1807	333
85970	ES188	S21	1-5/8"	G	27.23	16.44	10.79	YES	YES	1092	147
85340	ES188	S21	1-5/8"	D	26.46	15.85	10.61	YES	YES	1807	165
83391	ES190	ES190	1-3/8"	A	25.52	15.61	9.91	YES	NO	590	105
86203	ES193	ES193	45 MM	D	16.88	11.61	5.27	YES	YES	4238	910
86202	ES193	ES193	45 MM	D	14.52	10.43	4.09	YES	YES	4238	688
86201	ES193	ES193	45 MM	D	13.26	9.94	3.32	YES	YES	4238	688
86200	ES194	ES194	45 MM	D	14.24	10.45	3.79	YES	YES	4238	688
83065	ES206	ES171	1-5/8"	G	12.52	9.32	3.2	YES	YES	680	184

* Damping force, in pounds, to either extend or collapse the shock absorber at an average operating velocity. Fuerza de amortiguación en libras para extender o comprimir el amortiguador a una velocidad de operación promedio. La puissance d'amortissement en poids de l'amortisseur, soit comprimé, doit détendu, à une vitesse de fonctionnement moyenne.

† At bumper contact / Al contacto cone el tope de goma / Au contact avec le butoir

‡ For GasSLX Series, forces are at the "Firm" (F) setting. / Para la serie GasSLX, fas fuerzas estan adjustada en (F) "Firme". / Pour la série GasSLX, le réglage de la force est sur «Ferme» (F)

SPECIFICATIONS BY END MOUNT
ESPECIFICACIONES POR TIPO DE MONTAJE
SPÉCIFICATIONS PAR FIXATION DES EXTRÉMITÉS

Gabriel	Mounting		Bore	External Diameter Illustration	Lengths			Dust Tube	Recoil Cutoff	Controls*	
	Upper	Lower			Extended	Collapsed	Stroke			Rebound	Compression
83003	S1	BP7	1-3/8"	A	11.76	8.95†	3.4	YES	YES	248	100
83161	S1	EB1	1-3/8"	A	20.82	12.56	8.25	YES	NO	400	70
83518	S1	EB2	1-3/16"		24.4	14.26	10.14	YES	NO	153	82
83515	S1	EB2	1-3/16"		23.34	13.89	9.45	YES	NO	643	205
G63432	S1	EB19	1-3/8"		21.11	12.83	8.28				
83400	S1	S1	1-3/16"	F	22.02	12.82	9.2	YES	NO	301	120
83014	S1	S1	1-3/8"	A	10.48	7.11	3.37	NO	NO	544	501
G63387	S1	ES25	1-3/8"		23.32	14.04	9.28				
G63511	S1	ES25	1-3/8"		22.45	13.42	9.03				
G63350	S1	ES25	1-3/8"		18.82	11.79	7.03				
G63895	S11	BP9	1-3/8"		14.12	9.68	4.44				
G63894	S11	BP9	1-3/8"		12.82	8.88	3.94				
G63893	S11	LU1	1-3/8"		15.07	10.44	4.63				
G63375	S12	BP7	1-3/8"		14.14	9.11	5.03				
G63778	S12	ES171	1-3/8"		24.55	14.52	10.03				
G63817	S12	ES60	1-3/8"		15.8	11.02	4.78				
83317	S16	ES90	1-3/8"	B	27.03	16	11.34	YES	YES		
83301	S16	ES90	1-3/8"	B	24.52	14.74	9.78	YES	YES	653	86
83318	S16	S16	1-3/8"	B	22.53	13.5	9.03	YES	YES	323	77
83613	S16	S16	1-3/8"	A	21.04	12.76	8.28	YES	YES	601	242
85731	S21	EB3	1-5/8"	D	30.57	18.54	12.03	YES	YES	1517	293
85703	S21	EB3	1-5/8"	D	29.57	18.54	11.03	YES	YES	1435	186
85033	S21	EB3	1-5/8"	C	27.26	17.4	9.86	YES	YES	764	254
89427	S21	EB3	1-5/8"	G	27.19	17.62	9.57	YES	YES	794‡	253
85317	S21	EB3	1-5/8"	D	27.18	17.42	9.76	YES	YES	764	254
85711	S21	EB3	1-5/8"	D	24.54	15.26	9.27	YES	YES	1435	208
87000	S21	EB3	2-1/16"	E	24.46	15.21	9.25	YES	YES	1332	300
85311	S21	EB3	1-5/8"	D	23.95	14.79	9.16	YES	YES	764	254
85988	S21	EB3	1-5/8"	G	23.84	14.87	8.97	YES	YES	1200	138
89424	S21	EB3	1-5/8"	G	23.73	15.14	8.59	YES	YES	794‡	253
85710	S21	EB3	1-5/8"	D	23.45	15.1	8.34	YES	YES	994	248
85343	S21	EB3	1-5/8"	D	22.96	14.79	8.17	YES	YES	858	289
87016	S21	EB3	2-1/16"	E	21.17	13.91	7.26	YES	YES	1808	238
85009	S21	ES36	1-5/8"	C	23.56	14.4	9.16	YES	YES	857	144
83134	S21	ES36	1-3/8"	A	22.27	13.51	8.77	YES	NO	430	49
85921	S21	ES36	1-5/8"	G	22.07	13.57	8.5	YES	NO	2053	339
85316	S21	ES36	1-5/8"	D	20.61	12.82	7.8	YES	NO	943	443

* Damping force, in pounds, to either extend or collapse the shock absorber at an average operating velocity. Fuerza de amortiguación en libras para extender o comprimir el amortiguador a una velocidad de operación promedio. La puissance d'amortissement en poids de l'amortisseur, soit comprimé, doit détendu, à une vitesse de fonctionnement moyenne.

† At bumper contact / Al contacto cone el tope de goma / Au contact avec le butoir

‡ For GasSLX Series, forces are at the "Firm" (F) setting. / Para la serie GasSLX, fas fuerzas estan adjustada en (F) "Firme". / Pour la série GasSLX, le réglage de la force est sur «Ferme» (F)

SPECIFICATIONS BY END MOUNT
ESPECIFICACIONES POR TIPO DE MONTAJE
SPÉCIFICATIONS PAR FIXATION DES EXTRÉMITÉS

Gabriel	Mounting		Bore	External Diameter Illustration	Lengths			Dust Tube	Recoil Cutoff	Controls*	
	Upper	Lower			Extended	Collapsed	Stroke			Rebound	Compression
85351	S21	ES36	1-5/8"	D	20.61	12.82	7.79	YES	NO	1887	259
89426	S21	ES36	1-5/8"	G	20.46	13.05	7.41	YES	NO	926‡	419
85056	S21	ES36	1-5/8"	C	20.15	12.87	7.28	YES	YES	732	114
89441	S21	ES36	1-5/8"	G	20.14	13.06	7.08	YES	YES	761‡	126
85935	S21	ES36	1-5/8"	G	18.7	11.92	6.78	YES	NO	1054	419
85319	S21	ES150	1-5/8"	D	22.22	13.93	8.3	YES	YES	988	454
89428	S21	ES150	1-5/8"	G	22	14.27	7.72	YES	YES	958‡	446
83395	S21	ES178	1-3/8"	A	27.19	16.28	10.91	YES	NO	616	105
85709	S21	S21	1-5/8"	D	31.64	18.36	13.28	YES	YES	700	203
85727	S21	S21	1-5/8"	D	29.88	17.34	12.54	YES	YES	783	111
83136	S21	S21	1-3/8"	A	29.31	16.8	12.51	YES	NO	914	65
83106	S21	S21	1-3/8"	A	29.25	16.76	12.49	YES	NO	451	80
85048	S21	S21	1-5/8"	C	29.16	16.88	12.28	YES	NO	432	106
85318	S21	S21	1-5/8"	D	27.37	16.36	11.01	YES	YES	1372	192
85722	S21	S21	1-5/8"	D	27.16	16.41	10.76	YES	YES	1264	369
85069	S21	S21	1-5/8"	C	26.31	15.97	10.33	YES	YES	762	255
89455	S21	S21	1-5/8"	G	26.31	16.03	10.28	YES	YES	791‡	276
85328	S21	S21	1-5/8"	D	25.64	15.36	10.28	YES	NO	930	383
85071	S21	S21	1-5/8"	C	25.57	15.02	10.55	YES	NO	610	107
85049	S21	S21	1-5/8"	C	25.53	15	10.53	YES	NO	597	107
85085	S21	S21	1-5/8"	C	24.95	14.67	10.23	YES	NO	970	101
85728	S21	S21	1-5/8"	D	24.37	14.86	9.51	YES	YES	1435	510
83456	S21	S21	1-3/8"	B	24.03	14.25	9.78	YES	YES	566	80
85706	S21	S21	1-5/8"	D	23.65	14.24	9.41	YES	YES	1086	696
85707	S21	S21	2-1/16"	D	23.65	14.4	9.25	YES	YES	1761	986
87011	S21	S21	2-1/16"	E	23.65	14.4	9.25	YES	YES	1750	1050
87012	S21	S21	2-1/16"	E	23.65	14.4	9.25	YES	YES	650	364
87013	S21	S21	2-1/16"	E	23.65	14.4	9.25	YES	YES	1075	585
85325	S21	S21	1-5/8"	D	23.64	14.36	9.28	YES	NO	1024	240
89447	S21	S21	1-5/8"	G	23.63	14.69	8.94	YES	YES	702‡	241
85347	S21	S21	1-5/8"	D	23.62	14.22	9.4	YES	YES	961	122
85705	S21	S21	1-5/8"	D	23.62	14.23	9.39	YES	YES	639	436
85342	S21	S21	1-5/8"	D	23.28	13.99	9.29	YES	NO	893	188
83102	S21	S21	1-3/8"	A	22.89	13.54	9.35	YES	YES	513	333
85324	S21	S21	1-5/8"	D	22.14	13.61	8.53	YES	NO	579	114
85346	S21	S21	1-5/8"	D	22.12	13.48	8.64	YES	YES	2016	285
85027	S21	S21	1-5/8"	C	21.59	13.05	8.54	YES	NO	1008	539
89418	S21	S21	1-5/8"	G	21.44	13.19	8.25	YES	NO	1266‡	515

* Damping force, in pounds, to either extend or collapse the shock absorber at an average operating velocity. Fuerza de amortiguación en libras para extender o comprimir el amortiguador a una velocidad de operación promedio. La puissance d'amortissement en poids de l'amortisseur, soit comprimé, doit détendu, à une vitesse de fonctionnement moyenne.

† At bumper contact / Al contacto cone el tope de goma / Au contact avec le butoir

‡ For GasSLX Series, forces are at the "Firm" (F) setting. / Para la serie GasSLX, fas fuerzas estan adjustada en (F) "Firme". / Pour la série GasSLX, le réglage de la force est sur «Ferme» (F)

SPECIFICATIONS BY END MOUNT
ESPECIFICACIONES POR TIPO DE MONTAJE
SPÉCIFICATIONS PAR FIXATION DES EXTRÉMITÉS

Gabriel	Mounting		Bore	External Diameter Illustration	Lengths			Dust Tube	Recoil Cutoff	Controls*	
	Upper	Lower			Extended	Collapsed	Stroke			Rebound	Compression
695406	S21	S21	2-1/16"	E	21.39	13.26	8.13	YES	YES	1854	274
85124	S21	S21	1-5/8"	C	20.91	12.9	8.01	YES	YES	1086	222
85708	S21	S21	1-5/8"	D	20.63	12.85	7.78	YES	YES	914	204
85745	S21	S21	1-5/8"	D	19.88	12.34	7.54	YES	YES	3064	231
85746	S21	S21	1-5/8"	D	19.88	12.34	7.54	YES	YES	1754	167
83103	S21	S21	1-3/8"	A	19.66	11.93	7.74	YES	YES	517	301
85326	S21	S21	1-5/8"	D	19.64	12.36	7.28	YES	NO	799	142
85902	S21	S21	1-5/8"	G	19.03	12.09	6.93	YES	YES	1441	267
85336	S21	S21	1-5/8"	D	18.76	11.86	6.9	YES	NO	861	200
89423	S21	S21	1-5/8"	G	18.67	12.21	6.46	YES	YES	1352‡	573
85310	S21	S21	1-5/8"	D	18.63	11.71	6.92	YES	YES	1379	578
85900	S21	S21	1-5/8"	G	17.33	11.23	6.11	YES	YES	1467	337
87007	S21	S21	2-1/16"	E	15.65	10.4	5.25	YES	YES	879	253
85701	S21	S21	1-5/8"	D	15.64	10.36	5.28	YES	YES	914	204
G63678	S36	BP7	1-3/8"		18.09	13.56	4.53				
G63772	S36	BP10	1-3/8"		13.73	9.45	4.28				
G63622	S36	EB1	1-3/8"		15.32	10.29	5.03				
G63614	S36	EB1	1-3/8"		15.09	10.06	5.03				
G63929	S36	EB1	1-3/8"		14.72	9.71	5.01				
G63608	S36	EB1	1-3/8"		14.56	9.78	4.78				
G63386	S36	ES25	1-3/8"		16.11	10.58	5.53				
G63500	S36	ES25	1-3/8"		15.09	10.06	5.03				
G63414	S36	ES41	1-3/8"		15.09	10.06	5.03				
G63623	S36	ES83	1-3/8"		22.57	14.29	8.28				
G63624	S36	ES185	1-3/8"		20.17	12.64	7.53				
G64009	S38	ES34	1-3/8"		23.29	14.25	9.04				
G63886	S38	ES34	1-3/8"		20.8	13.36	7.44				
83178	S38	ES83	1-3/8"	A	21.95	13.26	8.69	YES	NO	690	275
83177	S40	EB1	1-3/8"	A	14.99†	10.12	5.38	YES	NO	690	275
83114	S40	ES35	1-3/8"	A	23.02	13.78	9.24	YES	NO	450	102
83105	S40	ES179	1-3/8"	A	31.91	18.3	13.61	YES	NO	559	150
83162	S40	ES190	1-3/8"	A	24.35	14.69	9.67	YES	NO	877	52
85333	S42	ES36	1-5/8"	D	20.65	12.98	7.67	YES	YES	1241	534
85332	S42	ES36	1-5/8"	D	20.64	12.98	7.66	YES	YES	2351	967
85182	S43	S43	1-5/8"	C	26.86	16.04	10.82	YES	NO	708	232
G63610	S47	EB1	1-3/8"		21.95	13.17	8.78				
G64043	S61	BP38	1-3/8"		14.09	9.68	4.41				
G63714	S62	BP7	1-3/8"		15.39	9.86	5.53				

* Damping force, in pounds, to either extend or collapse the shock absorber at an average operating velocity. Fuerza de amortiguación en libras para extender o comprimir el amortiguador a una velocidad de operación promedio. La puissance d'amortissement en poids de l'amortisseur, soit comprimé, doit détendu, à une vitesse de fonctionnement moyenne.

† At bumper contact / Al contacto cone el tope de goma / Au contact avec le butoir

‡ For GasSLX Series, forces are at the "Firm" (F) setting. / Para la serie GasSLX, fas fuerzas estan adjustada en (F) "Firme". / Pour la série GasSLX, le réglage de la force est sur «Ferme» (F)

SPECIFICATIONS BY END MOUNT
ESPECIFICACIONES POR TIPO DE MONTAJE
SPÉCIFICATIONS PAR FIXATION DES EXTRÉMITÉS

Gabriel	Mounting		Bore	External Diameter Illustration	Lengths			Dust Tube	Recoil Cutoff	Controls*	
	Upper	Lower			Extended	Collapsed	Stroke			Rebound	Compression
G63716	S62	ES26	1-3/8"		16.39	9.86	6.53				
85649	S62	ES34	1-5/8"	G	23.16	16.46	6.7	YES	NO	875	421
G63969	S62	ES34	1-3/8"		20.75	13.31	7.44				
G52131	S92	CL1			22.71	15.74	6.97				
G52591	S104	CL1			20.11	13.66	6.45				
G52592	S104	CL1			20.11	13.66	6.45				
G64148	LU1	DS1			18.39	14.09	4.3				
G57800	TMU2B1S	LP4			26.73	19.49	7.24				
G57801	TMU2B1S	LP4			26.73	19.49	7.24				
G57816	TMT3S	LP4			27.17	18.98	8.19				
G57206	TMT3S	CL1			22.71	15.74	6.97				

* Damping force, in pounds, to either extend or collapse the shock absorber at an average operating velocity. Fuerza de amortiguación en libras para extender o comprimir el amortiguador a una velocidad de operación promedio. La puissance d'amortissement en poids de l'amortisseur, soit comprimé, doit détendu, à une vitesse de fonctionnement moyenne.

† At bumper contact / Al contacto cone el tope de goma / Au contact avec le butoir

‡ For GasSLX Series, forces are at the "Firm" (F) setting. / Para la serie GasSLX, fas fuerzas estan adjustada en (F) "Firme". / Pour la série GasSLX, le réglage de la force est sur «Ferme» (F)

SPECIFICATIONS BY PART NUMBER
ESPECIFICACIONES POR NÚMERO DE PARTE
SPÉCIFICATIONS PAR NUMÉRO DE PIÈCE

Gabriel	Mounting		Bore	External Diameter Illustration	Lengths			Dust Tube	Recoil Cutoff	Controls*	
	Upper	Lower			Extended	Collapsed	Stroke			Rebound	Compression
632147	0	0	1-3/16"		22.45	14.1	8.35	NO	NO		
646155	ES36	ES36	1-3/16"		22.45	14.1	8.35	YES	NO		
646177	ES36	ES36	1-3/16"		22.45	14.1	8.35	NO	NO		
665472	ES36	ES36	1-5/8"	G	25.14	15.61	9.53	NO	NO	925	977
665937	ES36	ES36	1-5/8"	G	22.91	16.09	6.82	YES	NO		
695406	S21	S21	2-1/16"	E	21.39	13.26	8.13	YES	YES	1854	274
83001	ES149	EB1	1-3/8"	A	10.45†	8.41†	3	YES	YES	793	363
83002	ES10	ES10	1-3/8"	A	11.65	8.66	3	YES	YES	3112	590
83003	S1	BP7	1-3/8"	A	11.76	8.95†	3.4	YES	YES	248	100
83004	ES35	ES136	1"	2" D/T	9.36†	7.29	2.32	YES	YES	539	324
83005	BP8	S10	1-3/16"	2" D/T	7.34	5.87	1.47	YES	NO	858	216
83006	ES149	EB1	1-3/8"	A	10.71	8.52†	2.78	YES	YES	525	182
83007	EB1	EB1	1-3/8"	A	18.55	11.67	6.87	NO	NO	489	343
83008	ES136	ES136	1-3/8"	A	13†	10.13†	4	YES	YES	699	307
83009	ES149	ES149	1-3/8"	A	10.45†	8.41†	3	YES	YES	793	363
83010	ES24	ES24	1"	2" D/T	14.15†	9.33	5.07	YES	YES	188	70
83011	EB1	EB1	1-3/8"	A	11.55†	8.48	3.61	YES	YES	738	330
83012	EB1	EB1	1-3/8"	A	11.07†	8.21	3.37	YES	YES	738	330
83013	BP8	BP8	1-3/16"	2" D/T	7.66	6.63†	1.7	YES	NO	646	480
83014	S1	S1	1-3/8"	A	10.48	7.11	3.37	NO	NO	544	501
83015	BP8	S1	1-3/8"	A	9.84	7.59	2.25	YES	YES	735	430
83016	ES10	ES10	1"	1-5/8"	11.51	8.14	3.37	NO	YES	506	139
83017	ES149	ES149	1-3/8"	A	10.95	8.41†	3.13	YES	YES	353	138
83018	ES24	S10	1-3/8"	A	10.3†	8.42†	3.24	YES	YES	515	174
83019	ES24	S10	1-3/8"	A	9.48	8.21†	2.29	YES	YES	509	121
83020	ES91	ES91	1-3/8"	A	9.41	7.17	2.24	YES	YES	796	255
83021	ES10	ES10	1-3/8"	A	9.41	7.4	2.01	YES	YES	745	315
83022	ES24	ES24	1"	2" D/T	14.28	9.33	4.95	YES	NO	840	152
83023	ES10	ES181	1"	1-5/8"	8.7	7.09†	2.14	NO	YES	484	157
83024	ES10	ES10	1-3/8"	2-1/2" D/T	11.65	8.66	3	YES	YES	811	320
83025	ES163	ES163	1-3/8"	A	8.02	6.53	1.48	YES	YES	710	230
83026	ES24	ES24	1-3/8"	A	13.11	9.12	3.99	YES	YES	602	104
83027	ES24	S10	1-3/8"	A	13.82	9.2	4.61	YES	YES	602	104
83028	ES86	ES167	1-3/8"	A	9.96	7.6	2.33	YES	YES	445	531
83029	ES168	ES169	1-5/8"	C	10.35	7.87	2.41	YES	NO	1303	1349
83030	ES136	ES136	1-3/8"	A	9.61†	7.61	2.5	YES	YES	308	87
83031	ES10	ES10	1-3/8"	2-1/2" D/T	11.54	8.66	2.88	YES	YES	811	314

* Damping force, in pounds, to either extend or collapse the shock absorber at an average operating velocity. Fuerza de amortiguación en libras para extender o comprimir el amortiguador a una velocidad de operación promedio. La puissance d'amortissement en poids de l'amortisseur, soit comprimé, doit détendu, à une vitesse de fonctionnement moyenne.

† At bumper contact / Al contacto cone el tope de goma / Au contact avec le butoir

‡ For GasSLX Series, forces are at the "Firm" (F) setting. / Para la serie GasSLX, fas fuerzas estan adjustada en (F) "Firme". / Pour la série GasSLX, le réglage de la force est sur «Ferme» (F)

SPECIFICATIONS BY PART NUMBER
ESPECIFICACIONES POR NÚMERO DE PARTE
SPÉCIFICATIONS PAR NUMÉRO DE PIÈCE

Gabriel	Mounting		Bore	External Diameter Illustration	Lengths			Dust Tube	Recoil Cutoff	Controls*	
	Upper	Lower			Extended	Collapsed	Stroke			Rebound	Compression
83032	ES163	ES163	1-3/8"	A	7.85	6.36	1.49	NO	YES	779	135
83033	ES53	ES53	1-3/8"	A	13.99	10.37	3.62	YES	YES	494	312
83034	ES115	ES115	1-3/16"	1-5/8"	10.04†	7.32	2.97	NO	YES	430	129
83035	ES166	ES136	1-3/8"	A	13.04†	9.33	4.22	YES	YES	320	100
83038	ES149	EB1	1-3/8"	A	10.45†	8.41†	3	YES	YES	336	242
83039	ES149	ES149	1-3/8"	A	10.44†	8.4†	3	YES	YES	876	326
83040	ES171	ES172	1-3/8"	A	10.44†	8.4†	3	YES	YES	876	326
83041	BP27	S10	1-3/8"	A	10.51†	8.34†	3.02	YES	YES	486	189
83042	ES136	ES136	1-3/8"	A	9.89†	8.52†	2.39	YES	YES	954	541
83044	ES27	ES164	1-3/8"	A	10.91	7.93	2.98	YES	YES	789	296
83045	ES19	S10	1-3/8"	A	11.53†	8.58†	3.81	YES	N0	510	153
83046	ES10	ES181	1-3/16"		9.23†	7.62†	2.73	NO	YES	514	173
83047	ES149	EB1	1-3/8"	A	11.78†	9.74†	3	YES	YES	364	314
83048	ES86	ES167	1-3/8"	A	9.97	8.43†	2.37	YES	YES	904	415
83049	ES163	ES163	1-3/8"	A	8.02	6.53	1.48	YES	YES	2879	705
83050	ES19	S10	1-3/8"	A	10.43†	8.38†	2.9	YES	YES	599	321
83051	ES10	ES10	1-3/8"	2-1/2" D/T	9.41	7.4	2.01	YES	YES	579	163
83052	ES185	ES185	1-3/8"	2-1/2" D/T	9.41	7.19	2.23	YES	NO	1101	149
83053	ES185	ES185	1-3/8"	A	10.91	7.93	2.98	YES	YES	968	214
83054	ES185	ES185	1-3/8"	A	10.28	7.56	2.72	YES	YES	1004	184
83056	ES136	ES136	1-5/8"	C	11.53	8.63	2.89	YES	YES	3830	737
83057	ES171	ES172	1-3/8"	2-1/2" D/T	10.44†	8.4†	2.99	YES	YES	364	242
83058	ES19	S10	1-3/8"	A	10.43†	8.38†	2.9	YES	YES	742	243
83059	ES35	ES35	1-3/8"	A	12.06†	8.68	3.88	YES	YES	738	350
83060	EB	BP7	1-3/8"	A	9.76	7.98†	2.25	NO	YES	431	441
83061	ES10	ES10	1-3/8"	2-1/2" D/T	9.41	7.4	2.01	YES	YES	1030	220
83062	ES185	S42	1-3/8"	A	12.71	9.18	3.53	YES	NO	704	153
83063	ES175	ES136	1-3/8"	A	10.76†	9.26†	3.01	YES	YES	954	541
83064	ES149	ES149	1-3/8"	A	10.41†	8.36†	2.99	YES	YES	635	323
83065	ES206	ES171	1-5/8"	G	12.52	9.32	3.2	YES	YES	680	184
83066	ES153	ES153	1-3/8"	A	11.15†	9.2†	2.78	YES	YES	599	221
83067	ES166	ES136	1-3/16"	2" D/T	12.33†	9.27	3.56	YES	YES	424	101
83081	ES126	ES172	1-3/8"	A	13.39	9.98†	4	YES	YES	1004	232
83100	ES90	ES90	1-3/8"	A	26.6	16.11	10.49	YES	YES	481	142
83101	ES90	ES90	1-3/8"	A	24.63	15.13	9.49	YES	YES	481	142
83102	S21	S21	1-3/8"	A	22.89	13.54	9.35	YES	YES	513	333
83103	S21	S21	1-3/8"	A	19.66	11.93	7.74	YES	YES	517	301

* Damping force, in pounds, to either extend or collapse the shock absorber at an average operating velocity. Fuerza de amortiguación en libras para extender o comprimir el amortiguador a una velocidad de operación promedio. La puissance d'amortissement en poids de l'amortisseur, soit comprimé, doit détendu, à une vitesse de fonctionnement moyenne.

† At bumper contact / Al contacto cone el tope de goma / Au contact avec le butoir

‡ For GasSLX Series, forces are at the "Firm" (F) setting. / Para la serie GasSLX, fas fuerzas estan adjustada en (F) "Firme". / Pour la série GasSLX, le réglage de la force est sur «Ferme» (F)

SPECIFICATIONS BY PART NUMBER
ESPECIFICACIONES POR NÚMERO DE PARTE
SPÉCIFICATIONS PAR NUMÉRO DE PIÈCE

Gabriel	Mounting		Bore	External Diameter Illustration	Lengths			Dust Tube	Recoil Cutoff	Controls*	
	Upper	Lower			Extended	Collapsed	Stroke			Rebound	Compression
83104	EB3	EB3	1-3/8"	A	28.24	17.12	11.12	YES	NO	698	133
83105	S40	ES179	1-3/8"	A	31.91	18.3	13.61	YES	NO	559	150
83106	S21	S21	1-3/8"	A	29.25	16.76	12.49	YES	NO	451	80
83107	EB2	EB2	1-3/8"	A	31.66	18.4	13.25	YES	NO	352	77
83109	ES36	S42	1-3/8"	A	26.17	15.93	10.24	YES	YES	345	78
83110	ES36	S42	1-3/8"	A	22.94	14.31	8.63	YES	YES	450	143
83111	ES36	S42	1-3/8"	A	26.17	15.93	10.24	YES	YES	560	141
83112	ES36	S42	1-3/8"	A	21.52	13.41	8.11	YES	YES	1064	343
83113	ES36	EB3	1-3/8"	A	20.47	13.46	7.01	YES	YES	997	238
83114	S40	ES35	1-3/8"	A	23.02	13.78	9.24	YES	NO	450	102
83115	ES36	EB3	1-3/8"	A	16.19	13.32	4.87	YES	YES	997	238
83116	ES164	ES165	1-3/8"	A	23.81	14.68	9.12	YES	NO	354	300
83117	EB4	EB1	1-3/8"	A	23.98	14.47	9.51	YES	NO	354	300
83118	ES164	ES90	1-3/8"	A	24.45	14.71	9.74	YES	NO	410	311
83119	EB4	ES165	1-3/8"	A	23.96	14.84	9.12	YES	NO	354	300
83120	ES120	S21	1-3/8"	A	22.17	13.66	8.51	YES	YES	779	164
83121	ES36	ES36	1-3/8"	A	30.25	18.32	11.93	YES	YES	689	126
83122	ES36	ES36	1-3/8"	A	25.28	15.79	9.49	YES	YES	661	201
83123	ES36	ES36	1-3/8"	A	26.65	16.41	10.24	YES	YES	589	119
83124	ES36	ES36	1-3/8"	A	21.65	13.77	7.88	YES	YES	750	137
83125	ES36	ES36	1-3/8"	A	28.15	17.16	10.99	YES	YES	625	115
83126	ES36	ES36	1-3/8"	A	24.41	15.27	9.14	YES	YES	625	115
83127	ES36	ES36	1-3/8"	A	20.16	13.14	7.01	YES	YES	940	218
83128	ES36	ES36	1-3/8"	A	16.89	11.53	5.36	YES	YES	940	218
83130	ES36	ES36	1-3/8"	A	18.03	12.04	5.99	YES	YES	871	177
83131	ES83	ES83	1-3/8"	A	27.8	18.18	9.62	YES	NO	212	129
83132	EB3	EB3	1-3/8"	A	25.24	15.5	9.74	YES	NO	828	150
83134	S21	ES36	1-3/8"	A	22.27	13.51	8.77	YES	NO	430	49
83135	ES90	ES90	1-3/8"	A	19.49	12.38	7.11	YES	NO	519	121
83136	S21	S21	1-3/8"	A	29.31	16.8	12.51	YES	NO	914	65
83137	ES36	ES36	1-3/8"	A	30.04	17.79	12.25	YES	YES	517	132
83138	ES36	S42	1-3/8"	A	23.55	14.42	9.12	YES	YES	997	231
83140	EB3	EB3	1-3/8"	A	25.28	15.53	9.75	YES	NO	738	88
83141	EB3	EB3	1-3/8"	A	25.27	15.52	9.75	YES	NO	408	113
83142	ES162	S42	1-3/8"	A	23.92	14.49	9.43	YES	YES	367	131
83143	ES162	S42	1-3/8"	A	21.92	13.51	8.41	YES	YES	403	137
83144	ES36	ES36	1-3/8"	A	23.78	15.03	8.74	YES	YES	596	93

* Damping force, in pounds, to either extend or collapse the shock absorber at an average operating velocity. Fuerza de amortiguación en libras para extender o comprimir el amortiguador a una velocidad de operación promedio. La puissance d'amortissement en poids de l'amortisseur, soit comprimé, doit détendu, à une vitesse de fonctionnement moyenne.

† At bumper contact / Al contacto cone el tope de goma / Au contact avec le butoir

‡ For GasSLX Series, forces are at the "Firm" (F) setting. / Para la serie GasSLX, fas fuerzas estan adjustada en (F) "Firme". / Pour la série GasSLX, le réglage de la force est sur «Ferme» (F)

SPECIFICATIONS BY PART NUMBER
ESPECIFICACIONES POR NÚMERO DE PARTE
SPÉCIFICATIONS PAR NUMÉRO DE PIÈCE

Gabriel	Mounting		Bore	External Diameter Illustration	Lengths			Dust Tube	Recoil Cutoff	Controls*	
	Upper	Lower			Extended	Collapsed	Stroke			Rebound	Compression
83145	ES83	ES83	1-3/8"	A	19.93	12.32	7.54	YES	NO	479	153
83146	ES90	ES83	1-3/8"	A	24.02	14.68	9.33	YES	YES	479	119
83147	ES179	ES179	1-3/8"	A	28.54	17.4	11.15	YES	YES	358	128
83148	ES179	ES179	1-3/8"	A	30	17.83	12.17	YES	YES	604	149
83149	ES36	ES36	1-3/8"	A	25.28	15.78	9.49	YES	YES	332	101
83150	ES36	ES36	1-3/8"	A	15.24	10.43	4.81	YES	YES	940	216
83153	ES34	ES34	1-3/8"	A	21.69	13.62	8.07	YES	YES	974	206
83154	ES120	S21	1-3/8"	A	20.78	12.72	8.06	YES	YES	599	140
83155	ES34	ES34	1-3/8"	A	21.69	13.62	8.07	YES	YES	507	80
83156	ES90	ES90	1-3/8"	A	18.55	11.91	6.64	YES	NO	778	135
83157	ES36	ES90	1-3/8"	A	26.38	15.76	10.61	YES	NO	446	303
83158	ES22	ES22	1-3/8"	A	12.96	8.97	4	YES	NO	783	484
83159	EB2	EB2	1-3/8"	A	21.85	13.56	8.29	YES	NO	658	149
83160	ES128	ES36	1-3/8"	A	24.31	14.9	9.37	YES	YES	920	161
83161	S1	EB1	1-3/8"	A	20.82	12.56	8.25	YES	NO	400	70
83162	S40	ES190	1-3/8"	A	24.35	14.69	9.67	YES	NO	877	52
83163	ES175	ES175	1-3/8"	A	20.75	13.01	7.74	YES	NO	828	98
83164	ES36	ES165	1-3/8"	C	24.22	14.59	9.63	YES	NO	426	274
83166	ES179	ES179	1-3/8"	A	25.28	15.78	9.49	YES	YES	622	132
83167	ES90	ES90	1-3/8"	A	19.49	12.38	7.11	YES	NO	285	90
83168	ES179	ES179	1-3/8"	A	25.28	15.78	9.49	YES	YES	246	88
83169	ES90	ES90	1-3/8"	A	18.55	11.91	6.64	YES	NO	599	171
83171		ES36	1-3/8"	A	23.98	14.51	9.47	YES	YES	513	146
83174	ES128	ES36	1-3/8"	A	24.31	14.9	9.37	YES	YES	795	160
83175	ES175	ES175	1-3/8"	A	20.48	13.19	7.29	YES	NO	1245	156
83176	ES36	ES36	1-3/8"	A	26.62	15.96	10.66	NO	NO	406	275
83177	S40	EB1	1-3/8"	A	14.99†	10.12	5.38	YES	NO	690	275
83178	S38	ES83	1-3/8"	A	21.95	13.26	8.69	YES	NO	690	275
83180	ES90	ES83	1-3/8"		30.2	21.24	8.96	YES	NO	909	204
83200	EB2	EB2	1-3/8"	A	24.51	15.1	9.53	YES	NO	806	370
83203	ES36	ES36	1-3/8"	A	17.1	11.36	5.74	YES	YES	609	114
83204	ES36	ES36	1-3/8"	A	20.14	12.86	7.28	YES	YES	451	110
83205	ES36	ES36	1-3/8"	A	29.69	17.69	12	YES	YES	660	76
83207	ES36	ES36	1-3/8"	A	21.64	13.61	8.03	YES	YES	553	143
83209	ES36	ES36	1-3/8"	A	29.64	17.61	12.03	YES	YES	670	78
83214	EB3	EB3	1-3/8"	A	19.64	12.86	6.78	YES	YES	269	90
83215	EB3	EB3	1-3/8"	A	26.64	16.36	10.28	YES	YES	697	108

* Damping force, in pounds, to either extend or collapse the shock absorber at an average operating velocity. Fuerza de amortiguación en libras para extender o comprimir el amortiguador a una velocidad de operación promedio. La puissance d'amortissement en poids de l'amortisseur, soit comprimé, doit détendu, à une vitesse de fonctionnement moyenne.

† At bumper contact / Al contacto cone el tope de goma / Au contact avec le butoir

‡ For GasSLX Series, forces are at the "Firm" (F) setting. / Para la serie GasSLX, fas fuerzas estan adjustada en (F) "Firme". / Pour la série GasSLX, le réglage de la force est sur «Ferme» (F)

SPECIFICATIONS BY PART NUMBER
ESPECIFICACIONES POR NÚMERO DE PARTE
SPÉCIFICATIONS PAR NUMÉRO DE PIÈCE

Gabriel	Mounting		Bore	External Diameter Illustration	Lengths			Dust Tube	Recoil Cutoff	Controls*	
	Upper	Lower			Extended	Collapsed	Stroke			Rebound	Compression
83216	EB2	EB2	1-3/8"	A	23.51	14.48	9.03	YES	YES	776	262
83217	EB3	EB3	1-3/8"	A	22.77	14.49	8.28	YES	YES	633	159
83218	ES36	ES36	1-3/8"	A	25.19	15.44	9.75	YES	YES	721	194
83219	EB2	EB2	1-3/8"	A	20.01	12.73	7.28	YES	YES	299	125
83221	ES36	ES36	1-3/8"	A	24.01	14.73	9.28	YES	YES	599	153
83225	EB3	EB3	1-3/8"	A	24.14	15.11	9.03	YES	YES	482	159
83242	ES36	ES36	1-3/8"	A	33.73	20.98	12.75	YES	YES	721	135
83243	ES175	ES175	1-3/8"	A	24.41	15.26	9.15	YES	YES	296	170
83301	S16	ES90	1-3/8"	B	24.52	14.74	9.78	YES	YES	653	86
83303	EB7	ES36	1-3/8"	B	24.86	15.08	9.78	YES	YES	470	122
83304	EB7	ES36	1-3/8"	B	22.86	14.08	8.78	YES	YES	470	122
83308	EB2	EB2	1-3/8"	B	25.14	15.36	9.78	YES	YES	445	180
83309	EB2	EB2	1-3/8"	B	28.64	17.11	11.53	YES	YES	589	135
83310	ES36	ES36	1-3/8"	B	24.06	14.69	9.37	YES	NO	559	153
83312	EB2	EB2	1-3/8"	B	26.64	16.11	10.53	YES	YES	527	152
83314	EB2	EB2	1-3/8"	B	30.64	18.11	12.53	YES	YES	633	143
83317	S16	ES90	1-3/8"	B	27.03	16	11.34	YES	YES		
83318	S16	S16	1-3/8"	B	22.53	13.5	9.03	YES	YES	323	77
83353	EB3	S21	1-3/8"	B	24.84	15.06	9.78	YES	NO	432	214
83362	EB3	EB3	1-3/8"	B	27	16.25	10.75	YES	NO	539	202
83363	ES36	ES36	1-3/8"	A	16.46	11.35	5.11	YES	YES	1084	201
83364	ES90	ES83	1-3/8"	A	24.06	15.07	8.99	YES	YES	855	206
83389	ES36	ES36	1-3/8"	A	17.32	11.57	5.75	YES	YES	1084	228
83391	ES190	ES190	1-3/8"	A	25.52	15.61	9.91	YES	NO	590	105
83395	S21	ES178	1-3/8"	A	27.19	16.28	10.91	YES	NO	616	105
83396	ES179	ES179	1-3/8"		20.75	14.04	6.71	YES	YES	583	334
83397	ES175	ES175	1-3/8"	A	18.67	11.91	6.76	YES	NO	303	101
83398	ES175	ES175	1-3/8"	A	23.23	15.38	7.85	YES	YES	293	168
83400	S1	S1	1-3/16"	F	22.02	12.82	9.2	YES	NO	301	120
83401	EB1	EB1	1-3/16"	F	24.09	14.26	9.83	YES	NO	341	252
83404	EB2	EB2	1-3/16"	F	22.01	13.44	8.58	YES	NO	545	171
83456	S21	S21	1-3/8"	B	24.03	14.25	9.78	YES	YES	566	80
83515	S1	EB2	1-3/16"		23.34	13.89	9.45	YES	NO	643	205
83518	S1	EB2	1-3/16"		24.4	14.26	10.14	YES	NO	153	82
83519	EB2	EB2	1-3/16"	F	23.83	14.35	9.48	YES	NO	292	132
83613	S16	S16	1-3/8"	A	21.04	12.76	8.28	YES	YES	601	242
83634	ES120	ES120	1-3/8"	A	27.48	16.23	11.25	YES	YES	779	157

* Damping force, in pounds, to either extend or collapse the shock absorber at an average operating velocity. Fuerza de amortiguación en libras para extender o comprimir el amortiguador a una velocidad de operación promedio. La puissance d'amortissement en poids de l'amortisseur, soit comprimé, doit détendu, à une vitesse de fonctionnement moyenne.

† At bumper contact / Al contacto cone el tope de goma / Au contact avec le butoir

‡ For GasSLX Series, forces are at the "Firm" (F) setting. / Para la serie GasSLX, fas fuerzas estan adjustada en (F) "Firme". / Pour la série GasSLX, le réglage de la force est sur «Ferme» (F)

SPECIFICATIONS BY PART NUMBER
ESPECIFICACIONES POR NÚMERO DE PARTE
SPÉCIFICATIONS PAR NUMÉRO DE PIÈCE

Gabriel	Mounting		Bore	External Diameter Illustration	Lengths			Dust Tube	Recoil Cutoff	Controls*	
	Upper	Lower			Extended	Collapsed	Stroke			Rebound	Compression
83635	ES36	S21	1-3/8"	A	21.74	13.25	8.49	YES	NO	558	119
83636	ES90	ES90	1-3/8"	A	27.72	16.95	10.77	YES	YES	505	148
83901	ES153	ES153	1-3/8"	A	11.15†	9.2†	2.78	YES	YES	509	204
83905	ES86	ES167	1-3/8"	2-1/2" D/T	9.3†	7.81†	2.21	YES	YES	1105	170
83906	ES85	EB1	1-3/8"	2-1/2" D/T	10.45†	8.41†	3.01	YES	YES	586	320
83907	ES147	ES147	1-3/8"	A	14.97	10.61	4.36	YES	YES	460	365
83908	ES27	ES91	1-3/8"	A	9.3	7.03	2.27	YES	NO	904	279
83909	ES20	ES211	1-3/8"	A	9.45	7.33	2.12	YES	YES	646	180
83910	ES169	ES169	1-3/8"	A	11.63†	9.35†	2.28	YES	YES	572	239
83911	ES85	EB1	1-3/8"	A	10.45†	8.41†	2.99	YES	YES	991	321
85000	ES36	ES36	1-5/8"	C	17.28	11.5	5.78	YES	YES	1019	219
85001	EB3	EB3	1-5/8"	C	26.3	16.39	9.92	YES	NO	1202	186
85003	ES90	ES90	1-5/8"	C	25.42	15.63	9.79	YES	YES	437	182
85004	EB3	EB3	1-5/8"	C	20.68	13.67	7.01	YES	YES	1019	219
85005	ES36	ES36	1-5/8"	C	24.76	15.24	9.52	YES	YES	1019	219
85006	ES36	ES36	1-5/8"	C	28.54	17.13	11.41	YES	YES	1019	219
85007	EB3	EB3	1-5/8"	C	24.33	15.4	8.93	YES	YES	1008	171
85009	S21	ES36	1-5/8"	C	23.56	14.4	9.16	YES	YES	857	144
85010	ES36	ES36	1-5/8"	C	26.8	16.26	10.54	YES	YES	1019	219
85011	ES120	ES121	1-5/8"	C	27.49	16.46	11.03	YES	NO	1268	186
85012	EB2	EB2	1-5/8"	C	21.02	13.23	7.79	YES	NO	523	199
85013	ES36	ES36	1-5/8"	C	29.79	17.76	12.04	YES	YES	1019	219
85014	ES36	ES36	1-5/8"	C	21.76	13.74	8.02	YES	YES	1019	219
85023	EB2	EB2	1-5/8"	C	20.27	13	7.27	YES	YES	1008	539
85024	EB2	EB2	1-5/8"	C	28.77	17.25	11.52	YES	YES	1008	539
85025	EB2	S21	1-5/8"	C	23.02	14.01	9.01	YES	NO	1079	539
85026	ES136	S21	1-5/8"	C	23.02	14.01	9.01	YES	NO	1079	539
85027	S21	S21	1-5/8"	C	21.59	13.05	8.54	YES	NO	1008	539
85029	ES36	ES36	1-5/8"	C	20.54	13.11	7.43	YES	YES	1019	219
85030	ES36	ES36	1-5/8"	C	24.05	14.89	9.16	YES	YES	1019	219
85031	ES176	EB2	1-5/8"	C	25.63	15.87	9.76	YES	NO	941	257
85033	S21	EB3	1-5/8"	C	27.26	17.4	9.86	YES	YES	764	254
85036	ES36	ES36	1-5/8"	C	26.38	16.29	10.09	YES	YES	633	119
85040	EB3	EB3	1-5/8"	C	30.91	18.51	12.4	YES	NO	889	114
85042	EB3	EB3	1-5/8"	C	20.64	13.61	7.03	YES	YES	333	161
85043	ES36	ES36	1-5/8"	C	27.63	16.85	10.78	YES	YES	628	163
85044	ES36	ES36	1-5/8"	C	22.63	14.1	8.53	YES	NO	722	212

* Damping force, in pounds, to either extend or collapse the shock absorber at an average operating velocity. Fuerza de amortiguación en libras para extender o comprimir el amortiguador a una velocidad de operación promedio. La puissance d'amortissement en poids de l'amortisseur, soit comprimé, doit détendu, à une vitesse de fonctionnement moyenne.

† At bumper contact / Al contacto cone el tope de goma / Au contact avec le butoir

‡ For GasSLX Series, forces are at the "Firm" (F) setting. / Para la serie GasSLX, fas fuerzas estan adjustada en (F) "Firme". / Pour la série GasSLX, le réglage de la force est sur «Ferme» (F)

SPECIFICATIONS BY PART NUMBER
ESPECIFICACIONES POR NÚMERO DE PARTE
SPÉCIFICATIONS PAR NUMÉRO DE PIÈCE

Gabriel	Mounting		Bore	External Diameter Illustration	Lengths			Dust Tube	Recoil Cutoff	Controls*	
	Upper	Lower			Extended	Collapsed	Stroke			Rebound	Compression
85045	ES36	ES36	1-5/8"	C	14.52	10.12	4.4	YES	YES	1020	219
85046	EB2	EB2	1-5/8"	C	27.55	16.62	10.93	YES	YES	1008	539
85047	EB2	EB2	1-5/8"	C	25.31	15.52	9.79	YES	YES	1008	539
85048	S21	S21	1-5/8"	C	29.16	16.88	12.28	YES	NO	432	106
85049	S21	S21	1-5/8"	C	25.53	15	10.53	YES	NO	597	107
85050	ES36	ES36	1-5/8"	C	23.28	14.5	9.03	YES	NO	525	138
85051	ES36	ES36	1-5/8"	C	18.54	12.13	6.41	YES	YES	1019	139
85052	ES36	ES36	1-5/8"	C	13.26	9.49	3.77	YES	YES	1429	335
85053	EB3	EB3	1-5/8"	C	24.69	15.52	9.17	YES	NO	1019	227
85054	EB2	EB2	1-5/8"	C	23.26	14.37	8.89	YES	NO	602	104
85055	EB2	EB2	1-5/8"	C	25.63	15.63	10	YES	NO	577	102
85056	S21	ES36	1-5/8"	C	20.15	12.87	7.28	YES	YES	732	114
85057	ES36	EB3	1-5/8"	C	21.45	14.23	7.22	YES	YES	1216	115
85058	ES36	ES36	1-5/8"	C	22.67	14.26	8.41	YES	YES	722	114
85059	ES36	EB3	1-5/8"	C	19.09	12.8	6.29	YES	YES	928	151
85060	ES36	ES36	1-5/8"	C	19.79	12.76	7.04	YES	YES	943	405
85061	ES161	ES162	1-5/8"	C	24.76	15.25	9.51	YES	YES	1216	195
85062	EB2	EB2	1-5/8"	C	19.76	12.6	7.16	YES	NO	523	199
85063	EB2	EB2	1-5/8"	C	32.01	18.85	13.16	YES	NO	762	174
85064	ES36	ES36	1-5/8"	C	16.02	10.75	5.27	YES	YES	1481	340
85065	ES161	S21	1-5/8"	C	28.05	17	11.05	YES	YES	1059	300
85066	ES161	ES162	1-5/8"	C	24.64	15.25	9.39	YES	YES	812	322
85067	ES174	ES136	1-5/8"	C	30.54	18.15	12.39	YES	YES	676	170
85069	S21	S21	1-5/8"	C	26.31	15.97	10.33	YES	YES	762	255
85070	ES174	EB3	1-5/8"	C	25.59	15.83	9.76	YES	NO	1100	310
85071	S21	S21	1-5/8"	C	25.57	15.02	10.55	YES	NO	610	107
85072	ES36	ES176	1-5/8"	C	24.17	14.81	9.36	YES	YES	1387	305
85078	ES36	ES36	1-5/8"	C	14.76	10.12	4.64	YES	YES	1409	282
85079	ES36	ES36	1-5/8"	C	12.04	8.87	3.17	YES	YES	1494	325
85080	ES175	S21	1-5/8"	C	22.51	13.77	8.74	YES	NO	447	138
85081	ES175	S21	1-5/8"	C	23.44	14.33	9.11	YES	YES	1658	250
85082	ES90	ES90	1-5/8"	C	28.6	20.64	7.97	YES	YES	1435	266
85083	ES162	S42	1-5/8"	C	27.81	16.53	11.28	YES	YES	1429	184
85084	ES174	ES136	1-5/8"	C	20.59	13.03	7.57	YES	NO	1145	407
85085	S21	S21	1-5/8"	C	24.95	14.67	10.23	YES	NO	970	101
85086	ES36	ES36	1-5/8"	C	17.55	11.63	5.92	YES	YES	2027	389
85087	ES36	ES176	1-5/8"	C	22.78	14.7	8.08	YES	YES	1568	403
85088	ES161	ES162	1-5/8"	C	25.31	15.52	9.79	YES	YES	616	178

* Damping force, in pounds, to either extend or collapse the shock absorber at an average operating velocity. Fuerza de amortiguación en libras para extender o comprimir el amortiguador a una velocidad de operación promedio. La puissance d'amortissement en poids de l'amortisseur, soit comprimé, doit détendu, à une vitesse de fonctionnement moyenne.

† At bumper contact / Al contacto cone el tope de goma / Au contact avec le butoir

‡ For GasSLX Series, forces are at the "Firm" (F) setting. / Para la serie GasSLX, fas fuerzas estan adjustada en (F) "Firme". / Pour la série GasSLX, le réglage de la force est sur «Ferme» (F)

SPECIFICATIONS BY PART NUMBER
ESPECIFICACIONES POR NÚMERO DE PARTE
SPÉCIFICATIONS PAR NUMÉRO DE PIÈCE

Gabriel	Mounting		Bore	External Diameter Illustration	Lengths			Dust Tube	Recoil Cutoff	Controls*	
	Upper	Lower			Extended	Collapsed	Stroke			Rebound	Compression
85090	ES150	ES36	1-5/8"	C	25.31	15.52	9.79	YES	YES	943	99
85091	ES36	ES36	1-5/8"	C	21.38	13.56	7.82	YES	NO	1121	331
85092	ES150	S21	1-5/8"	C	21.95	15.04	6.89	YES	YES	1597	138
85097	ES36	ES36	1-5/8"	C	27.95	17.11	10.84	YES	YES	1086	109
85098	ES161	ES162	1-5/8"	C	24.64	15.24	9.4	YES	YES	747	158
85099	ES36	ES36	1-5/8"	C	26.02	15.93	10.09	YES	YES	1152	135
85102	ES36	ES136	1-5/8"	C	21.52	14.93	6.59	YES	YES	1224	342
85106	ES150	ES150	1-5/8"	C	20.03	12.89	7.14	YES	YES	1054	109
85109	ES36	ES195	1-5/8"	C	24.21	15.14	9.07	YES	YES	1123	149
85119	ES150	ES150	1-5/8"	C	21.39	13.81	7.68	YES	YES	1387	185
85120	ES175	ES175	1-5/8"	C	23.67	15.06	8.61	YES	NO	2083	519
85122	ES120	S21	1-5/8"	C	22.22	13.78	8.44	YES	YES	926	162
85123	ES120	S21	1-5/8"	C	21.49	13.26	8.23	YES	NO	1809	246
85124	S21	S21	1-5/8"	C	20.91	12.9	8.01	YES	YES	1086	222
85125	ES158	ES159	1-5/8"	C	26.9	16.64	10.26	YES	YES	1479	183
85126	ES158	S21	1-5/8"	C	21.76	13.63	8.13	YES	YES	1086	215
85180	ES150	ES36	1-5/8"	C	20.94	13.83	7.11	YES	YES	681	283
85181	ES150	ES150	1-5/8"	C	26.33	17.06	9.27	YES	YES	681	285
85182	S43	S43	1-5/8"	C	26.86	16.04	10.82	YES	NO	708	232
85188	ES161	ES162	1-5/8"	C	25.31	15.52	9.79	YES	YES	1074	255
85200	ES166	ES182	1-5/8"	C	21.18	13.71	7.48	YES	YES	878	141
85300	EB3	EB3	1-5/8"	D	17.98	12.21	5.78	YES	YES	1435	676
85301	EB3	EB3	1-5/8"	D	31.92	19.03	12.89	YES	NO	1442	455
85302	EB3	EB3	1-5/8"	D	22.75	14.61	8.14	YES	NO	836	253
85303	EB3	EB3	1-5/8"	D	24.76	15.48	9.29	YES	NO	1019	221
85304	EB3	EB3	1-5/8"	D	22.25	14.22	8.03	YES	NO	767	325
85305	EB3	EB3	1-5/8"	D	27.25	16.7	10.55	YES	NO	1120	225
85307	EB3	EB3	1-5/8"	D	23.98	15.08	8.89	YES	NO	1094	173
85308	EB3	EB3	1-5/8"	D	25.11	15.83	9.28	YES	YES	764	254
85310	S21	S21	1-5/8"	D	18.63	11.71	6.92	YES	YES	1379	578
85311	S21	EB3	1-5/8"	D	23.95	14.79	9.16	YES	YES	764	254
85312	EB3	S21	1-5/8"	D	23.68	14.8	8.88	YES	YES	717	111
85313	EB3	EB3	1-5/8"	D	26.26	16.35	9.91	YES	YES	717	111
85314	EB3	EB3	1-5/8"	D	26.49	16.46	10.03	YES	YES	1216	169
85315	EB3	EB3	1-5/8"	D	29.61	18.07	11.53	YES	NO	380	142
85316	S21	ES36	1-5/8"	D	20.61	12.82	7.8	YES	NO	943	443
85317	S21	EB3	1-5/8"	D	27.18	17.42	9.76	YES	YES	764	254

* Damping force, in pounds, to either extend or collapse the shock absorber at an average operating velocity. Fuerza de amortiguación en libras para extender o comprimir el amortiguador a una velocidad de operación promedio. La puissance d'amortissement en poids de l'amortisseur, soit comprimé, doit détendu, à une vitesse de fonctionnement moyenne.

† At bumper contact / Al contacto cone el tope de goma / Au contact avec le butoir

‡ For GasSLX Series, forces are at the "Firm" (F) setting. / Para la serie GasSLX, fas fuerzas estan adjustada en (F) "Firme". / Pour la série GasSLX, le réglage de la force est sur «Ferme» (F)

SPECIFICATIONS BY PART NUMBER
ESPECIFICACIONES POR NÚMERO DE PARTE
SPÉCIFICATIONS PAR NUMÉRO DE PIÈCE

Gabriel	Mounting		Bore	External Diameter Illustration	Lengths			Dust Tube	Recoil Cutoff	Controls*	
	Upper	Lower			Extended	Collapsed	Stroke			Rebound	Compression
85318	S21	S21	1-5/8"	D	27.37	16.36	11.01	YES	YES	1372	192
85319	S21	ES150	1-5/8"	D	22.22	13.93	8.3	YES	YES	988	454
85320	EB3	EB3	1-5/8"	D	26.15	16.35	9.8	YES	NO	970	308
85321	ES36	ES36	1-5/8"	D	25.38	15.59	9.79	YES	YES	1435	676
85322	EB3	ES160	1-5/8"	D	15.26	11.85	3.41	YES	YES	764	162
85323	ES36	ES36	1-5/8"	D	17.36	11.58	5.78	YES	YES	1085	163
85324	S21	S21	1-5/8"	D	22.14	13.61	8.53	YES	NO	579	114
85325	S21	S21	1-5/8"	D	23.64	14.36	9.28	YES	NO	1024	240
85326	S21	S21	1-5/8"	D	19.64	12.36	7.28	YES	NO	799	142
85327	EB3	ES160	1-5/8"	D	16.01	12.1	3.91	YES	YES	764	162
85328	S21	S21	1-5/8"	D	25.64	15.36	10.28	YES	NO	930	383
85329	EB3	EB3	1-5/8"	D	24.52	15.48	9.04	YES	YES	1550	232
85330	EB3	S21	1-5/8"	D	22.44	14.16	8.28	YES	YES	1140	176
85331	ES158	ES159	1-5/8"	D	19.62	12.85	6.77	YES	YES	1757	396
85332	S42	ES36	1-5/8"	D	20.64	12.98	7.66	YES	YES	2351	967
85333	S42	ES36	1-5/8"	D	20.65	12.98	7.67	YES	YES	1241	534
85334	EB3	EB3	1-5/8"	D	14.52	10.48	4.04	YES	YES	1271	319
85335	ES158	ES159	1-5/8"	D	19.62	12.85	6.77	YES	YES	827	107
85336	S21	S21	1-5/8"	D	18.76	11.86	6.9	YES	NO	861	200
85337	ES36	ES36	1-5/8"	D	28.72	17.44	11.28	YES	YES	1318	374
85338	ES36	ES36	1-5/8"	D	19.47	12.68	6.79	YES	YES	1664	420
85339	EB3	EB3	1-5/8"	D	31.68	19.02	12.66	YES	YES	804	463
85340	ES188	S21	1-5/8"	D	26.46	15.85	10.61	YES	YES	1807	165
85341	ES188	S21	1-5/8"	D	30.96	18.1	12.86	YES	YES	1807	333
85342	S21	S21	1-5/8"	D	23.28	13.99	9.29	YES	NO	893	188
85343	S21	EB3	1-5/8"	D	22.96	14.79	8.17	YES	YES	858	289
85344	ES36	ES36	1-5/8"	D	13.22	9.45	3.77	YES	YES	1581	443
85345	ES36	ES36	1-5/8"	D	21.83	13.82	8.01	YES	YES	1093	219
85346	S21	S21	1-5/8"	D	22.12	13.48	8.64	YES	YES	2016	285
85347	S21	S21	1-5/8"	D	23.62	14.22	9.4	YES	YES	961	122
85351	S21	ES36	1-5/8"	D	20.61	12.82	7.79	YES	NO	1887	259
85376	EB3	EB3	1-5/8"	D	33.27	19.73	13.54	YES	NO	668	134
85377	ES182	ES182	1-5/8"	D	23.8	14.84	8.96	YES	YES	1937	570
85378	ES182	ES182	1-5/8"	D	23.8	14.84	8.96	YES	YES	1110	240
85379	EB3	S21	1-5/8"	D	22.69	14.4	8.29	YES	YES	1658	176
85380	EB3	S21	1-5/8"	D	23.95	14.79	9.15	YES	YES	1568	227
85382	ES36	ES36	1-5/8"	D	20.22	13.07	7.15	YES	YES	1658	420

* Damping force, in pounds, to either extend or collapse the shock absorber at an average operating velocity. Fuerza de amortiguación en libras para extender o comprimir el amortiguador a una velocidad de operación promedio. La puissance d'amortissement en poids de l'amortisseur, soit comprimé, doit détendu, à une vitesse de fonctionnement moyenne.

† At bumper contact / Al contacto cone el tope de goma / Au contact avec le butoir

‡ For GasSLX Series, forces are at the "Firm" (F) setting. / Para la serie GasSLX, fas fuerzas estan adjustada en (F) "Firme". / Pour la série GasSLX, le réglage de la force est sur «Ferme» (F)

SPECIFICATIONS BY PART NUMBER
ESPECIFICACIONES POR NÚMERO DE PARTE
SPÉCIFICATIONS PAR NUMÉRO DE PIÈCE

Gabriel	Mounting		Bore	External Diameter Illustration	Lengths			Dust Tube	Recoil Cutoff	Controls*	
	Upper	Lower			Extended	Collapsed	Stroke			Rebound	Compression
85637	ES90	ES36	1-5/8"	G	20.74	13.19	7.55	YES	NO	2256	327
85638	ES179	ES179	1-5/8"	G	28.58	17.4	11.18	YES	YES	643	138
85639	ES90	ES36	1-5/8"	G	27.08	17.79	9.29	YES	NO	795	109
85642	ES177	ES90	1-5/8"	G	22.52	14.52	8	YES	YES	1920	309
85648	ES90	ES90	1-5/8"	G	22.28	13.97	8.31	YES	NO	761	247
85649	S62	ES34	1-5/8"	G	23.16	16.46	6.7	YES	NO	875	421
85650	ES136	ES34	1-5/8"	G	24.88	16.35	8.53	YES	NO	941	463
85656	ES90	ES90	1-5/8"	G	26.49	16.94	9.55	YES	YES	1225	274
85670	ES175	ES175	1-5/8"	G	23.19	14.67	8.52	YES	YES	591	176
85700	EB3	EB3	1-5/8"	D	26.09	16.58	9.51	YES	YES	1446	328
85701	S21	S21	1-5/8"	D	15.64	10.36	5.28	YES	YES	914	204
85702	EB3	EB3	1-5/8"	D	23.76	15.85	7.91	YES	YES	1093	825
85703	S21	EB3	1-5/8"	D	29.57	18.54	11.03	YES	YES	1435	186
85704	EB3	EB3	1-5/8"	D	28.75	18.72	10.03	YES	YES	1435	186
85705	S21	S21	1-5/8"	D	23.62	14.23	9.39	YES	YES	639	436
85706	S21	S21	1-5/8"	D	23.65	14.24	9.41	YES	YES	1086	696
85707	S21	S21	2-1/16"	D	23.65	14.4	9.25	YES	YES	1761	986
85708	S21	S21	1-5/8"	D	20.63	12.85	7.78	YES	YES	914	204
85709	S21	S21	1-5/8"	D	31.64	18.36	13.28	YES	YES	700	203
85710	S21	EB3	1-5/8"	D	23.45	15.1	8.34	YES	YES	994	248
85711	S21	EB3	1-5/8"	D	24.54	15.26	9.27	YES	YES	1435	208
85712	EB3	EB3	1-5/8"	D	20.5	13.47	7.04	YES	YES	1435	562
85713	EB3	EB3	1-5/8"	D	24.51	15.48	9.04	YES	YES	1157	180
85714	EB3	EB3	1-5/8"	D	25.13	15.85	9.28	YES	YES	1220	175
85715	EB3	EB3	1-5/8"	D	25.13	15.85	9.28	YES	YES	1915	200
85716	EB3	EB3	1-5/8"	D	21.99	14.33	7.66	YES	YES	1220	175
85717	EB3	EB3	1-5/8"	D	25.13	15.85	9.28	YES	YES	1915	200
85718	EB3	EB3	1-5/8"	D	22.13	15.04	7.09	YES	YES	2506	206
85719	EB3	EB3	1-5/8"	D	17.25	11.97	5.28	YES	YES	1517	213
85720	EB3	EB3	1-5/8"	D	20.5	13.47	7.03	YES	YES	1435	562
85722	S21	S21	1-5/8"	D	27.16	16.41	10.76	YES	YES	1264	369
85723	EB3	S21	1-5/8"	D	19.93	12.9	7.03	YES	YES	1318	248
85724	ES158	ES159	1-5/8"	D	22.81	14.51	8.3	YES	YES	1235	454
85727	S21	S21	1-5/8"	D	29.88	17.34	12.54	YES	YES	783	111
85728	S21	S21	1-5/8"	D	24.37	14.86	9.51	YES	YES	1435	510
85729	EB3	S21	1-5/8"	D	21.55	13.77	7.78	YES	YES	783	111
85730	EB3	EB3	1-5/8"	D	30.75	18.72	12.03	YES	YES	1517	293

* Damping force, in pounds, to either extend or collapse the shock absorber at an average operating velocity. Fuerza de amortiguación en libras para extender o comprimir el amortiguador a una velocidad de operación promedio. La puissance d'amortissement en poids de l'amortisseur, soit comprimé, doit détendu, à une vitesse de fonctionnement moyenne.

† At bumper contact / Al contacto cone el tope de goma / Au contact avec le butoir

‡ For GasSLX Series, forces are at the "Firm" (F) setting. / Para la serie GasSLX, fas fuerzas estan adjustada en (F) "Firme". / Pour la série GasSLX, le réglage de la force est sur «Ferme» (F)

SPECIFICATIONS BY PART NUMBER
ESPECIFICACIONES POR NÚMERO DE PARTE
SPÉCIFICATIONS PAR NUMÉRO DE PIÈCE

Gabriel	Mounting		Bore	External Diameter Illustration	Lengths			Dust Tube	Recoil Cutoff	Controls*	
	Upper	Lower			Extended	Collapsed	Stroke			Rebound	Compression
85731	S21	EB3	1-5/8"	D	30.57	18.54	12.03	YES	YES	1517	293
85732	EB3	EB3	2-1/16"	E	22.13	15.11	7.03	YES	YES	2632	382
85733	EB3	S21	1-5/8"	D	23.57	14.73	8.84	YES	YES	717	111
85734	EB3	EB3	1-5/8"	D	20.73	13.7	7.03	YES	YES	1288	227
85735	EB3	EB3	1-5/8"	D	26.72	16.7	10.02	YES	YES	1288	227
85736	EB3	EB3	1-5/8"	D	23.61	15.2	8.41	YES	YES	1155	352
85737	ES173	ES173	1-5/8"	D	15.11	10.84	4.27	YES	YES	3066	782
85738	ES36	ES36	1-5/8"	D	17.46	11.69	5.77	YES	YES	1830	416
85739	ES187	ES187	1-5/8"	D	20.73	13.54	7.19	YES	YES	3247	334
85740	EB3	S21	1-5/8"	D	24.7	15.15	9.55	YES	YES	848	305
85745	S21	S21	1-5/8"	D	19.88	12.34	7.54	YES	YES	3064	231
85746	S21	S21	1-5/8"	D	19.88	12.34	7.54	YES	YES	1754	167
85900	S21	S21	1-5/8"	G	17.33	11.23	6.11	YES	YES	1467	337
85901	EB3	EB3	1-5/8"	G	29.09	17.68	11.42	YES	NO	1830	418
85902	S21	S21	1-5/8"	G	19.03	12.09	6.93	YES	YES	1441	267
85903	ES36	ES36	1-5/8"	G	31.99	19.13	12.86	YES	YES	666	113
85904	ES36	ES36	1-5/8"	G	27.61	16.88	10.73	YES	YES	666	113
85905	ES36	EB3	1-5/8"	G	23.81	16.16	7.66	YES	YES	1020	219
85906	ES36	ES36	1-5/8"	G	21.77	14.05	7.72	YES	YES	700	255
85907	ES36	EB3	1-5/8"	G	21.43	14.2	7.23	YES	YES	1216	251
85908	ES36	ES36	1-5/8"	G	18.48	12.25	6.23	YES	YES	1020	219
85909	ES36	ES36	1-5/8"	G	24.25	15.19	9.06	YES	YES	700	255
85910	ES36	ES36	1-5/8"	G	20.79	13.54	7.25	YES	YES	1074	219
85911	ES36	ES36	1-5/8"	G	16.89	11.53	5.36	YES	YES	1020	219
85912	EB3	ES36	1-5/8"	G	18.68	12.57	6.11	YES	YES	1020	219
85913	ES36	EB3	1-5/8"	G	22.56	15.2	7.36	YES	YES	1020	219
85914	ES36	ES36	1-5/8"	G	14.36	10.25	4.11	YES	YES	1020	219
85915	ES36	EB3	1-5/8"	G	19.06	12.7	6.36	YES	YES	1020	219
85916	ES36	ES36	1-5/8"	G	24.65	15.55	9.1	YES	YES	1149	219
85918	ES150	ES150	1-5/8"	G	22.97	14.58	8.39	YES	NO	1726	412
85919	ES36	ES36	1-5/8"	G	22.52	14.33	8.19	YES	YES	1265	121
85920	ES150	ES150	1-5/8"	G	21.16	13.57	7.59	YES	NO	845	49
85921	S21	ES36	1-5/8"	G	22.07	13.57	8.5	YES	NO	2053	339
85922	ES150	ES150	1-5/8"	G	21.19	13.53	7.66	YES	NO	878	185
85923	ES177	ES161	1-5/8"	G	22.52	14.52	8	YES	YES	1940	221
85924	ES90	ES36	1-5/8"	G	20.39	12.99	7.41	YES	NO	1036	122
85925	ES90	ES90	1-5/8"	G	22.56	15.6	6.95	YES	NO	761	144

* Damping force, in pounds, to either extend or collapse the shock absorber at an average operating velocity. Fuerza de amortiguación en libras para extender o comprimir el amortiguador a una velocidad de operación promedio. La puissance d'amortissement en poids de l'amortisseur, soit comprimé, doit détendu, à une vitesse de fonctionnement moyenne.

† At bumper contact / Al contacto cone el tope de goma / Au contact avec le butoir

‡ For GasSLX Series, forces are at the "Firm" (F) setting. / Para la serie GasSLX, fas fuerzas estan adjustada en (F) "Firme". / Pour la série GasSLX, le réglage de la force est sur «Ferme» (F)

SPECIFICATIONS BY PART NUMBER
ESPECIFICACIONES POR NÚMERO DE PARTE
SPÉCIFICATIONS PAR NUMÉRO DE PIÈCE

Gabriel	Mounting		Bore	External Diameter Illustration	Lengths			Dust Tube	Recoil Cutoff	Controls*	
	Upper	Lower			Extended	Collapsed	Stroke			Rebound	Compression
85926	ES90	ES90	1-5/8"	G	26.5	17.96	8.54	YES	YES	1387	279
85927	ES90	ES90	1-5/8"	G	24.76	15.47	9.3	YES	YES	1288	388
85928	ES90	ES90	1-5/8"	G	20.31	13.24	7.07	YES	NO	957	229
85929	ES90	ES90	1-5/8"	G	20.28	13.21	7.08	YES	NO	2214	267
85930	ES177	ES161	1-5/8"	G	17.86	12	5.86	YES	YES	1617	342
85931	ES177	ES161	1-5/8"	G	22.52	14.52	8	YES	YES	1435	220
85932	ES178	ES150	1-5/8"	G	21.26	13.7	7.56	YES	YES	1102	430
85933	ES175	ES175	1-5/8"	G	18.27	12.72	5.54	YES	YES	1089	383
85934	ES36	ES36	1-5/8"	G	17.8	12.04	5.75	YES	YES	3511	1063
85935	S21	ES36	1-5/8"	G	18.7	11.92	6.78	YES	NO	1054	419
85936	ES174	S43	1-5/8"	G	17.27	11.48	5.79	YES	YES	1479	337
85937	ES174	S43	1-5/8"	G	19.04	12.35	6.7	YES	YES	1479	337
85938	ES36	ES36	1-5/8"	G	16.06	10.82	5.24	YES	YES	1581	432
85939	ES36	ES36	1-5/8"	G	14.44	10.04	4.41	YES	YES	1719	420
85953	ES90	ES90	1-5/8"	G	26.13	15.86	10.27	YES	NO	2001	153
85954	ES90	ES36	1-5/8"	G	20.43	13	7.43	YES	NO	1812	148
85955	ES175	ES150	1-5/8"	G	21.25	13.66	7.59	YES	YES	1034	397
85956	ES183	ES184	1-5/8"	G	30.65	18.77	11.88	YES	YES	979	373
85957	ES90	ES90	1-5/8"	G	20.78	13.19	7.6	YES	NO	1583	138
85958	ES150	ES150	1-5/8"	G	22.89	14.5	8.39	YES	YES	1926	281
85959	ES150	ES150	1-5/8"	G	21.16	13.57	7.59	YES	YES	1021	123
85961	ES178	ES176	1-5/8"	G	22.83	14.17	8.66	YES	YES	2206	240
85962	ES178	ES176	1-5/8"	G	21.8	13.66	8.15	YES	YES	2206	240
85963	ES90	ES36	1-5/8"	G	25.49	18.68	6.81	YES	YES	1490	206
85964	ES90	ES36	1-5/8"	G	25.49	18.68	6.81	YES	YES	1981	205
85965	ES178	ES161	1-5/8"	G	24.24	15.15	9.09	YES	YES	2206	238
85966	ES178	ES161	1-5/8"	G	23.25	14.64	8.62	YES	YES	2206	238
85967	ES178	ES176	1-5/8"	G	23.93	14.86	9.07	YES	YES	2206	238
85968	EB3	EB3	1-5/8"	G	19.87	13.39	6.48	YES	YES	1069	227
85969	ES90	ES36	1-5/8"	G	18.38	11.93	6.45	YES	NO	1612	125
85970	ES188	S21	1-5/8"	G	27.23	16.44	10.79	YES	YES	1092	147
85971	ES36	ES36	1-5/8"	G	22.56	14.17	8.39	YES	NO	2315	451
85972	ES36	ES36	1-5/8"	G	30.78	18.26	12.52	YES	NO	1493	261
85974	ES36	ES36	1-5/8"	G	26.02	16.11	9.91	YES	YES	3087	230
85975	ES36	ES36	1-5/8"	G	24.24	15.15	9.09	YES	YES	1658	219
85976	ES36	ES36	1-5/8"	G	29.92	18.12	11.8	YES	YES	582	138
85977	ES36	S42	1-5/8"	G	26.2	15.91	10.29	YES	YES	582	138

* Damping force, in pounds, to either extend or collapse the shock absorber at an average operating velocity. Fuerza de amortiguación en libras para extender o comprimir el amortiguador a una velocidad de operación promedio. La puissance d'amortissement en poids de l'amortisseur, soit comprimé, doit détendu, à une vitesse de fonctionnement moyenne.

† At bumper contact / Al contacto cone el tope de goma / Au contact avec le butoir

‡ For GasSLX Series, forces are at the "Firm" (F) setting. / Para la serie GasSLX, fas fuerzas estan adjustada en (F) "Firme". / Pour la série GasSLX, le réglage de la force est sur «Ferme» (F)

SPECIFICATIONS BY PART NUMBER
ESPECIFICACIONES POR NÚMERO DE PARTE
SPÉCIFICATIONS PAR NUMÉRO DE PIÈCE

Gabriel	Mounting		Bore	External Diameter Illustration	Lengths			Dust Tube	Recoil Cutoff	Controls*	
	Upper	Lower			Extended	Collapsed	Stroke			Rebound	Compression
85978	ES179	ES179	1-5/8"	G	29.84	18.16	11.69	YES	YES	582	138
85979	ES36	ES36	1-5/8"	G	31.18	18.66	12.52	YES	YES	582	138
85980	ES179	ES179	1-5/8"	G	31.17	18.66	12.52	YES	YES	582	138
85984	ES158	ES150	1-5/8"	G	25.44	15.96	9.48	YES	YES	2248	1168
85985	ES174	S43	1-5/8"	G	19.04	12.31	6.73	YES	YES	2068	723
85986	ES175	ES150	1-5/8"	G	21.25	13.66	7.59	YES	YES	1754	221
85988	S21	EB3	1-5/8"	G	23.84	14.87	8.97	YES	YES	1200	138
85989	ES174	ES136	1-5/8"	G	20.78	13.15	7.63	YES	NO	1812	351
85994	ES90	ES36	1-5/8"	G	21.21	13.4	7.81	YES	NO	1824	263
85995	ES90	ES36	1-5/8"	G	23.5	14.52	8.98	YES	NO	1830	173
85998	ES90	ES90	1-5/8"	G	22.83	14.17	8.66	YES	NO	1345	178
85999	ES90	ES90	1-5/8"	G	19.84	12.79	7.05	YES	NO	2214	259
86200	ES194	ES194	45 MM	D	14.24	10.45	3.79	YES	YES	4238	688
86201	ES193	ES193	45 MM	D	13.26	9.94	3.32	YES	YES	4238	688
86202	ES193	ES193	45 MM	D	14.52	10.43	4.09	YES	YES	4238	688
86203	ES193	ES193	45 MM	D	16.88	11.61	5.27	YES	YES	4238	910
87000	S21	EB3	2-1/16"	E	24.46	15.21	9.25	YES	YES	1332	300
87001	EB3	EB3	2-1/16"	E	20.76	13.76	7	YES	YES	1158	190
87002	EB3	EB3	2-1/16"	E	23.5	15.41	8.09	YES	YES	879	203
87003	EB3	EB3	2-1/16"	E	26.26	16.51	9.75	YES	YES	1332	395
87004	EB3	EB3	2-1/16"	E	26.76	16.76	10	YES	YES	1158	190
87006	EB3	EB3	2-1/16"	E	23.75	15.25	8.5	YES	YES	1158	272
87007	S21	S21	2-1/16"	E	15.65	10.4	5.25	YES	YES	879	253
87011	S21	S21	2-1/16"	E	23.65	14.4	9.25	YES	YES	1750	1050
87012	S21	S21	2-1/16"	E	23.65	14.4	9.25	YES	YES	650	364
87013	S21	S21	2-1/16"	E	23.65	14.4	9.25	YES	YES	1075	585
87015	ES173	ES173	45MM	E	15.51	11.18	4.33	YES	YES	4950	900
87016	S21	EB3	2-1/16"	E	21.17	13.91	7.26	YES	YES	1808	238
87017	ES160	ES160	2-1/16"	E	23.35	15.31	8.07	YES	YES	1876	220
87018	ES36	ES36	2-1/16"	E	17.36	11.71	5.65	YES	YES	2479	1000
87019	ES160	ES160	2-1/16"	E	24.84	15.85	8.9	YES	YES	2972	665
89401	EB2	EB2	1-5/8"	G	28.41	17.16	11.25	YES	NO	665‡	194
89402	EB2	EB2	1-5/8"	G	24.41	15.16	9.25	YES	NO	874‡	206
89403	EB2	EB2	1-5/8"	G	26.86	17.16	9.7	YES	YES	929‡	281
89405	ES36	ES36	1-5/8"	G	26.3	16.57	9.73	YES	YES	1009‡	249
89406	ES36	ES36	1-5/8"	G	24.76	15.82	8.93	YES	YES	658‡	125
89407	ES36	ES36	1-5/8"	G	21.61	14.17	7.45	YES	YES	652‡	218

* Damping force, in pounds, to either extend or collapse the shock absorber at an average operating velocity. Fuerza de amortiguación en libras para extender o comprimir el amortiguador a una velocidad de operación promedio. La puissance d'amortissement en poids de l'amortisseur, soit comprimé, doit détendu, à une vitesse de fonctionnement moyenne.

† At bumper contact / Al contacto cone el tope de goma / Au contact avec le butoir

‡ For GasSLX Series, forces are at the "Firm" (F) setting. / Para la serie GasSLX, fas fuerzas estan adjustada en (F) "Firme". / Pour la série GasSLX, le réglage de la force est sur «Ferme» (F)

SPECIFICATIONS BY PART NUMBER
ESPECIFICACIONES POR NÚMERO DE PARTE
SPÉCIFICATIONS PAR NUMÉRO DE PIÈCE

Gabriel	Mounting		Bore	External Diameter Illustration	Lengths			Dust Tube	Recoil Cutoff	Controls*	
	Upper	Lower			Extended	Collapsed	Stroke			Rebound	Compression
89408	EB2	EB2	1-5/8"	G	19.68	12.9	6.78	YES	NO	536‡	201
89409	EB2	EB2	1-5/8"	G	27.13	16.92	10.2	YES	YES	567‡	165
89410	EB3	EB3	1-5/8"	G	26.34	16.57	9.77	YES	NO	1185‡	182
89411	ES90	ES90	1-5/8"	G	25.39	16.06	9.34	YES	YES	436‡	186
89412	EB3	EB3	1-5/8"	G	24.26	15.68	8.58	YES	YES	1155‡	169
89413	EB2	EB2	1-5/8"	G	20.94	13.53	7.41	YES	NO	536‡	201
89414	ES36	ES36	1-5/8"	G	29.65	18.18	11.46	YES	YES	1045‡	217
89415	EB2	EB2	1-5/8"	G	20.12	13.29	6.83	YES	YES	1155‡	514
89416	EB2	EB2	1-5/8"	G	28.62	17.54	11.08	YES	YES	1155‡	514
89417	ES136	S21	1-5/8"	G	22.94	14.31	8.63	YES	NO	1226‡	515
89418	S21	S21	1-5/8"	G	21.44	13.19	8.25	YES	NO	1266‡	515
89419	EB3	EB3	1-5/8"	G	18.04	12.67	5.36	YES	YES	1352‡	636
89420	EB3	EB3	1-5/8"	G	22.8	14.8	8	YES	NO	862‡	258
89422	EB3	EB3	1-5/8"	G	25.12	16.3	8.83	YES	YES	794‡	253
89423	S21	S21	1-5/8"	G	18.67	12.21	6.46	YES	YES	1352‡	573
89424	S21	EB3	1-5/8"	G	23.73	15.14	8.59	YES	YES	794‡	253
89425	EB3	EB3	1-5/8"	G	26.5	16.93	9.57	YES	YES	1352‡	167
89426	S21	ES36	1-5/8"	G	20.46	13.05	7.41	YES	NO	926‡	419
89427	S21	EB3	1-5/8"	G	27.19	17.62	9.57	YES	YES	794‡	253
89428	S21	ES150	1-5/8"	G	22	14.27	7.72	YES	YES	958‡	446
89429	EB3	EB3	1-5/8"	G	26.22	16.57	9.65	YES	NO	941‡	266
89430	ES36	ES36	1-5/8"	G	24.61	15.66	8.94	YES	YES	1462‡	279
89431	ES36	ES36	1-5/8"	G	22.41	14.16	8.25	YES	NO	751‡	211
89432	ES36	ES36	1-5/8"	G	23.42	14.79	8.63	YES	NO	1507‡	561
89434	EB2	EB2	1-5/8"	G	27.12	16.79	10.33	YES	YES	1155‡	514
89435	EB2	EB2	1-5/8"	G	24.92	15.82	9.1	YES	YES	1155‡	514
89436	ES36	ES36	1-5/8"	G	17.24	12.04	5.2	YES	YES	998‡	217
89437	ES36	ES36	1-5/8"	G	20.12	13.42	6.7	YES	YES	1155‡	514
89438	EB2	EB2	1-5/8"	G	23.17	14.54	8.63	YES	NO	583‡	103
89439	EB2	EB2	1-5/8"	G	25.67	15.79	9.88	YES	NO	518‡	103
89440	ES36	ES36	1-5/8"	G	23.9	15.31	8.59	YES	YES	1498‡	561
89441	S21	ES36	1-5/8"	G	20.14	13.06	7.08	YES	YES	761‡	126
89442	EB3	EB3	1-5/8"	G	24.72	15.74	8.98	YES	NO	1055‡	224
89443	ES158	ES159	1-5/8"	G	22.19	14.66	7.53	YES	YES	1206‡	466
89446	EB2	EB2	1-5/8"	G	28.36	17.41	10.95	YES	YES	702‡	204
89447	S21	S21	1-5/8"	G	23.63	14.69	8.94	YES	YES	702‡	241
89448	ES161	ES162	1-5/8"	G	24.61	15.66	8.94	YES	YES	782‡	323

* Damping force, in pounds, to either extend or collapse the shock absorber at an average operating velocity. Fuerza de amortiguación en libras para extender o comprimir el amortiguador a una velocidad de operación promedio. La puissance d'amortissement en poids de l'amortisseur, soit comprimé, doit détendu, à une vitesse de fonctionnement moyenne.

† At bumper contact / Al contacto cone el tope de goma / Au contact avec le butoir

‡ For GasSLX Series, forces are at the "Firm" (F) setting. / Para la serie GasSLX, fas fuerzas estan adjustada en (F) "Firme". / Pour la série GasSLX, le réglage de la force est sur «Ferme» (F)

SPECIFICATIONS BY PART NUMBER
ESPECIFICACIONES POR NÚMERO DE PARTE
SPÉCIFICATIONS PAR NUMÉRO DE PIÈCE

Gabriel	Mounting		Bore	External Diameter Illustration	Lengths			Dust Tube	Recoil Cutoff	Controls*	
	Upper	Lower			Extended	Collapsed	Stroke			Rebound	Compression
89449	ES150	ES150	1-5/8"	G	23.25	14.9	8.35	YES	NO	1519‡	324
89450	ES161	ES162	1-5/8"	G	24.61	15.66	8.94	YES	YES	1282‡	193
89451	ES174	ES136	1-5/8"	G	30.39	18.54	11.86	YES	YES	645‡	172
89453	ES178	ES150	1-5/8"	G	21.14	13.93	7.21	YES	YES	860‡	435
89454	ES175	ES175	1-5/8"	G	18.27	12.91	5.36	YES	YES	938‡	388
89455	S21	S21	1-5/8"	G	26.31	16.03	10.28	YES	YES	791‡	276
89456	ES174	S43	1-5/8"	G	17.04	11.63	5.4	YES	YES	975‡	377
89457	ES90	ES36	1-5/8"	G	19.92	13.02	6.89	YES	NO	941‡	156
89458	ES177	ES161	1-5/8"	G	22.48	14.6	7.88	YES	YES	1575‡	222
89459	ES174	EB3	1-5/8"	G	25.63	16.14	9.49	YES	NO	1179‡	314
89460	ES174	ES136	1-5/8"	G	20.58	13.03	7.55	YES	NO	997‡	384
89461	ES160	ES160	1-5/8"	G	19.96	13.58	6.38	YES	YES	897‡	103
89502	ES161	ES162	1-5/8"	G	24.61	15.66	8.94	YES	YES	1240‡	300
89503	ES150	ES150	1-5/8"	G	21.28	13.72	7.56	YES	NO	1033‡	123
G52131	S92	CL1			22.71	15.74	6.97				
G52591	S104	CL1			20.11	13.66	6.45				
G52592	S104	CL1			20.11	13.66	6.45				
G57206	TMT3S	CL1			22.71	15.74	6.97				
G57800	TMU2B1S	LP4			26.73	19.49	7.24				
G57801	TMU2B1S	LP4			26.73	19.49	7.24				
G57816	TMT3S	LP4			27.17	18.98	8.19				
G63183	EB4	EB4	1-3/8"		20.79	13.01	7.78				
G63299	EB1	EB1	1-3/8"		18.08	11.55	6.53				
G63306	ES24	ES24	1-3/8"		19.85	12.57	7.28				
G63347	ES31	ES35	1-3/8"		18.08	11.55	6.53				
G63350	S1	ES25	1-3/8"		18.82	11.79	7.03				
G63355	EB1	ES24	1-3/8"		14.98	9.95	5.03				
G63357	ES24	ES24	1-3/8"		14.98	9.95	5.03				
G63366	ES34	ES34	1-3/8"		23.26	14.23	9.03				
G63375	S12	BP7			14.14	9.11	5.03				
G63386	S36	ES25	1-3/8"		16.11	10.58	5.53				
G63387	S1	ES25	1-3/8"		23.32	14.04	9.28				
G63403	ES26	ES26	1-3/8"		24.58	14.8	9.78				
G63405	EB1	EB1	1-3/8"		20.01	12.48	7.53				
G63406	EB1	ES83	1-3/8"		22.98	13.95	9.03				
G63409	EB1	ES185	1-3/8"		21.48	13.2	8.28				
G63414	S36	ES41	1-3/8"		15.09	10.06	5.03				
G63419	EB1	EB1	1-3/8"		24.08	14.55	9.53				

* Damping force, in pounds, to either extend or collapse the shock absorber at an average operating velocity. Fuerza de amortiguación en libras para extender o comprimir el amortiguador a una velocidad de operación promedio. La puissance d'amortissement en poids de l'amortisseur, soit comprimé, doit détendu, à une vitesse de fonctionnement moyenne.

† At bumper contact / Al contacto cone el tope de goma / Au contact avec le butoir

‡ For GasSLX Series, forces are at the "Firm" (F) setting. / Para la serie GasSLX, fas fuerzas estan adjustada en (F) "Firme". / Pour la série GasSLX, le réglage de la force est sur «Ferme» (F)

SPECIFICATIONS BY PART NUMBER
ESPECIFICACIONES POR NÚMERO DE PARTE
SPÉCIFICATIONS PAR NUMÉRO DE PIÈCE

Gabriel	Mounting		Bore	External Diameter Illustration	Lengths			Dust Tube	Recoil Cutoff	Controls*	
	Upper	Lower			Extended	Collapsed	Stroke			Rebound	Compression
G63432	S1	EB19	1-3/8"		21.11	12.83	8.28				
G63455	ES83	ES83	1-3/8"		22.98	13.95	9.03				
G63461	EB1	ES83	1-3/8"		25.51	15.23	10.28				
G63500	S36	ES25	1-3/8"		15.09	10.06	5.03				
G63511	S1	ES25	1-3/8"		22.45	13.42	9.03				
G63524	EB1	ES185	1-3/8"		27.08	16.05	11.03				
G63525	EB1	ES185	1-3/8"		22.98	13.95	9.03				
G63605	EB19	ES27	1-3/8"		24.24	14.71	9.53				
G63607	BP14	ES185	1-3/8"		25.58	15.3	10.28				
G63608	S36	EB1	1-3/8"		14.56	9.78	4.78				
G63610	S47	EB1	1-3/8"		21.95	13.17	8.78				
G63614	S36	EB1	1-3/8"		15.09	10.06	5.03				
G63622	S36	EB1	1-3/8"		15.32	10.29	5.03				
G63623	S36	ES83	1-3/8"		22.57	14.29	8.28				
G63624	S36	ES185	1-3/8"		20.17	12.64	7.53				
G63625	EB1	ES24	1-3/8"		22.56	13.78	8.78				
G63675	ES34	ES34			26.86	16.08	10.78				
G63676	ES69	ES69	1-3/8"		15.48	10.45	5.03				
G63678	S36	BP7	1-3/8"		18.09	13.56	4.53				
G63679	BP14	ES83	1-3/8"		25.01	14.98	10.03				
G63714	S62	BP7	1-3/8"		15.39	9.86	5.53				
G63716	S62	ES26	1-3/8"		16.39	9.86	6.53				
G63772	S36	BP10	1-3/8"		13.73	9.45	4.28				
G63773	EB1	ES185	1-3/8"		22.98	13.95	9.03				
G63775	EB1	ES185	1-3/8"		27.08	16.05	11.03				
G63778	S12	ES171	1-3/8"		24.55	14.52	10.03				
G63808	EB1	ES83	1-3/8"		28.86	17.08	11.78				
G63809	EB1	ES83	1-3/8"		22.98	13.95	9.03				
G63810	EB1	ES185	1-3/8"		31.6	18.57	13.03				
G63817	S12	ES60			15.8	11.02	4.78				
G63837	BP8	ES41	1-3/8"		28.23	17.95	10.28				
G63866	ES34	ES34	1-3/8"		22.81	14.12	8.69				
G63886	S38	ES34			20.8	13.36	7.44				
G63888	EB1	ES41			31.36	18.67	12.69				
G63893	S11	LU1			15.07	10.44	4.63				
G63894	S11	BP9			12.82	8.88	3.94				
G63895	S11	BP9			14.12	9.68	4.44				
G63896	BP14	ES34			22.36	13.92	8.44				

* Damping force, in pounds, to either extend or collapse the shock absorber at an average operating velocity. Fuerza de amortiguación en libras para extender o comprimir el amortiguador a una velocidad de operación promedio. La puissance d'amortissement en poids de l'amortisseur, soit comprimé, doit détendu, à une vitesse de fonctionnement moyenne.

† At bumper contact / Al contacto cone el tope de goma / Au contact avec le butoir

‡ For GasSLX Series, forces are at the "Firm" (F) setting. / Para la serie GasSLX, fas fuerzas estan adjustada en (F) "Firme". / Pour la série GasSLX, le réglage de la force est sur «Ferme» (F)

SPECIFICATIONS BY PART NUMBER
ESPECIFICACIONES POR NÚMERO DE PARTE
SPÉCIFICATIONS PAR NUMÉRO DE PIÈCE

Gabriel	Mounting		Bore	External Diameter Illustration	Lengths			Dust Tube	Recoil Cutoff	Controls*	
	Upper	Lower			Extended	Collapsed	Stroke			Rebound	Compression
G63897	BP14	ES34			23.87	14.68	9.19				
G63929	S36	EB1	1-3/8"		14.72	9.71	5.01				
G63969	S62	ES34	1-3/8"		20.75	13.31	7.44				
G64009	S38	ES34			23.29	14.25	9.04				
G64010	EB1	ES83			26.94	16	10.94				
G64013	ES34	ES34			26.52	16.33	10.19				
G64042	ES18	ES18			14.92	10.55	4.37				
G64043	S61	BP38			14.09	9.68	4.41				
G64089	ES56	ES56			20.43	13.03	7.4				
G64121	ES34	ES34			25.35	16.17	9.18				
G64148	LU1	DS1			18.39	14.09	4.3				
G64149	ES34	ES34			24.57	16.14	8.43				

* Damping force, in pounds, to either extend or collapse the shock absorber at an average operating velocity. Fuerza de amortiguación en libras para extender o comprimir el amortiguador a una velocidad de operación promedio. La puissance d'amortissement en poids de l'amortisseur, soit comprimé, doit détendu, à une vitesse de fonctionnement moyenne.

† At bumper contact / Al contacto cone el tope de goma / Au contact avec le butoir

‡ For GasSLX Series, forces are at the "Firm" (F) setting. / Para la serie GasSLX, fas fuerzas estan adjustada en (F) "Firme". / Pour la série GasSLX, le réglage de la force est sur «Ferme» (F)

MOUNTING ACCESSORY PACKAGES AND COMPONENT PARTS
KITS DE ACCESORIOS Y COMPONENTES
ENSEMBLES D'ACCESSOIRES DE MONTURES ET DE PIÈCES DÉTACHÉES

140126	401006	1	Hex nut / Tuerca hexagonal / Écrou hexagonal	3/8" x 24 UNF thread
	401383	2	Retainer (washer) / Seguro (arandela) / Arrêt (rondelle)	3/8 in. I.D. x 1-1/2 in. O.D. x .093 in. thick
	402263	2	Bushing / Buje / Bague	7/8" centering lip for 3/8" O.D. stud
140149	401011	4	Bushing / Buje / Bague	EB2 style - for 1-3/4" O.D. eye ring - 3/4" diam. Stud
140169	401011	2	Bushing / Buje / Bague	EB2 style - for 1-3/4" O.D. eye ring - 3/4" diam. Stud
140357	401164	1	Hex nut / Tuerca hexagonal / Écrou hexagonal	1/2" x 20 UNF Thread
	401166	1	Lock washer / Arandela de seguridad / Rondelle-frein	1/2" lock washer
	401174	1	Hex nut / Tuerca hexagonal / Écrou hexagonal	5/8" x 18 thread
	401193	1	Lock washer / Arandela de seguridad / Rondelle-frein	5/8" I.D. (thin)
	401266	1	Retainer (washer) / Seguro (arandela) / Arrêt (rondelle)	5/8" I.D. x 1-1/4" O.D. x .075" thick
	402519	1	Retainer (washer) / Seguro (arandela) / Arrêt (rondelle)	1/2" I.D. x 1-1/4" O.D. x .104" thick
	403050	1	Stud / Perno / Goujon	1/2" x 20 and 5/8" x 18 thread
140455	401006	1	Hex nut / Tuerca hexagonal / Écrou hexagonal	3/8" x 24 UNF thread
	401008	2	Retainer (washer) / Seguro (arandela) / Arrêt (rondelle)	3/8 in. I.D. x 1-1/4 in. O.D. x .075 in. thick
	403489	2	Bushing / Buje / Bague	5/8" centering lip for 3/8" O.D. stud
140524	401006	1	Hex nut / Tuerca hexagonal / Écrou hexagonal	3/8" x 24 UNF thread
	401376	2	Retainer (washer) / Seguro (arandela) / Arrêt (rondelle)	3/8 in. I.D. x 1-3/8 in. O.D. x .089 in. thick
	402294	2	Bushing / Buje / Bague	5/8" lip for 3/8" dia. stud-5/8"or 7/8'holes
140526	403813	2	Boot / Bota / Gaine	
	403815	2	Cotter pin / Chaveta / Goupille	
	404046	2	Nut / Tuerca / Écrou	1/2" x 20 UNF Thread
140673	401006	1	Hex nut / Tuerca hexagonal / Écrou hexagonal	3/8" x 24 UNF thread
	401008	2	Retainer (washer) / Seguro (arandela) / Arrêt (rondelle)	3/8 in. I.D. x 1-1/4 in. O.D. x .075 in. thick
	403962	2	Bushing / Buje / Bague	1/2" centering lip for 3/8" O.D. stud
140689	401006	3	Hex nut / Tuerca hexagonal / Écrou hexagonal	3/8" x 24 UNF thread
	402263	2	Bushing / Buje / Bague	7/8" centering lip for 3/8" O.D. stud
	404001	2	Retainer (washer) / Seguro (arandela) / Arrêt (rondelle)	10 mm I.D. x 1-1/2" O.D. x .120" thick
140702	401174	1	Hex nut / Tuerca hexagonal / Écrou hexagonal	5/8" x 18 thread
	401184	1	Lock washer / Arandela de seguridad / Rondelle-frein	7/16" Lock washer
	401193	1	Lock washer / Arandela de seguridad / Rondelle-frein	5/8" I.D. (thin)
	402844	1	Hex nut / Tuerca hexagonal / Écrou hexagonal	7/16" x 20 UNF Thread
	403878	1	Washer / Arandela / Rondelle	0.453" I.D. x 1.25" O.D. x .075" thick
	404782	1	Stud / Perno / Goujon	5/8" x 18 and 7/16" x 20
140719	402653-001	2	Lock washer / Arandela de seguridad / Rondelle-frein	5/16" I.D. (med.)
	403870-001	2	Bolt / Tornillo / Boulon	Hex Head 5/16" x 18 x 3/4 in. long
	403871-001	2	Hex nut / Tuerca hexagonal / Écrou hexagonal	5/16" x 18 thread
140780	401006	1	Hex nut / Tuerca hexagonal / Écrou hexagonal	3/8" x 24 UNF thread
	402943	1	Retainer (washer) / Seguro (arandela) / Arrêt (rondelle)	0.457" I.D. x 1.68" O.D. x .120" thick
	403298	1	Retainer (washer) / Seguro (arandela) / Arrêt (rondelle)	0.390" I.D. x 1.68" O.D. x .120" thick
	403299	2	Bushing / Buje / Bague	7/8" centering lip for 7/16" O.D. stud
140857	401006	1	Hex nut / Tuerca hexagonal / Écrou hexagonal	3/8" x 24 UNF thread
	401008	1	Retainer (washer) / Seguro (arandela) / Arrêt (rondelle)	3/8 in. I.D. x 1-1/4 in. O.D. x .075 in. thick
	401383	1	Retainer (washer) / Seguro (arandela) / Arrêt (rondelle)	3/8 in. I.D. x 1-1/2 in. O.D. x .093 in. thick
	403489	2	Bushing / Buje / Bague	5/8" centering lip for 3/8" O.D. stud
	429680-030	1	Instruction sheet / Hoja de instr. / Feuillet d'instr.	
140884	401267	1	Retainer (washer) / Seguro (arandela) / Arrêt (rondelle)	5/8" I.D. x 1-1/4" O.D. x .075" thick
	402662	1	Spacer / Espaciador / Entretoise	5/8" I.D. x 1-1/4" O.D. x 1/4" thick
	412016	1	Extn nut / Tuerca ext. / Écrou ext.	7/16" x 20 UNF Thread
	427030	1	Instruction sheet / Hoja de instr. / Feuillet d'instr.	

MOUNTING ACCESSORY PACKAGES AND COMPONENT PARTS
KITS DE ACCESORIOS Y COMPONENTES
ENSEMBLES D'ACCESSOIRES DE MONTURES ET DE PIÈCES DÉTACHÉES

140885	401267	1	Retainer (washer) / Seguro (arandela) / Arrêt (rondelle)	5/8" I.D. x 1-1/4" O.D. x .075" thick
	402662	1	Spacer / Espaciador / Entretoise	5/8" I.D. x 1-1/4" O.D. x 1/4" thick
	403189	2	Spacer / Espaciador / Entretoise	1/2" I.D. x 1-1/4" O.D.
	411012	2	Sleeve / Camisa / Manchon	13 mm I.D. x 5/8 in. O.D. x 1-5/16 in. long
	412016	1	Extn nut / Tuerca ext. / Écrou ext.	7/16" x 20 UNF Thread
	427031	1	Instruction sheet / Hoja de instr. / Feuillet d'instr.	
140921	401006	1	Hex nut / Tuerca hexagonal / Écrou hexagonal	3/8" x 24 UNF thread
	401007	1	Pal nut / Tuerca de cierre / Écrou Pal	3/8" x 24 UNF thread
	401011	2	Bushing / Buje / Bague	EB2 style - for 1-3/4" O.D. eye ring - 3/4" diam. Stud
	401377	1	Retainer (washer) / Seguro (arandela) / Arrêt (rondelle)	1/2" I.D. x 1-3/8" O.D. x .075" thick
	401383	1	Retainer (washer) / Seguro (arandela) / Arrêt (rondelle)	3/8 in. I.D. x 1-1/2 in. O.D. x .093 in. thick
	402267	2	Bushing / Buje / Bague	9/16" centering lip for 7/16" O.D. stud
140947	401193	1	Lock washer / Arandela de seguridad / Rondelle-frein	5/8" I.D. (thin)
	404451	2	Hex nut / Tuerca hexagonal / Écrou hexagonal	16 x 1.5 metric thread
	404452	4	Retainer (washer) / Seguro (arandela) / Arrêt (rondelle)	5/8" I.D. x 2-3/4" O.D. x .180" thick
	404453	2	Sleeve / Camisa / Manchon	16 mm I.D. x 1-3/16" O.D. x 1-1/2" long
	404454	4	Bushing / Buje / Bague	1-3/16" centering lip for 13/16" O.D. stud
141041	401006	1	Hex nut / Tuerca hexagonal / Écrou hexagonal	3/8" x 24 UNF thread
	401376	2	Retainer (washer) / Seguro (arandela) / Arrêt (rondelle)	3/8 in. I.D. x 1-3/8 in. O.D. x .089 in. thick
	404652	2	Bushing / Buje / Bague	Used with 5/8" dia. hole or 7/8" dia. Hole
141045	401006	1	Hex nut / Tuerca hexagonal / Écrou hexagonal	3/8" x 24 UNF thread
	401377	1	Retainer (washer) / Seguro (arandela) / Arrêt (rondelle)	1/2" I.D. x 1-3/8" O.D. x .075" thick
	401383	1	Retainer (washer) / Seguro (arandela) / Arrêt (rondelle)	3/8 in. I.D. x 1-1/2 in. O.D. x .093 in. thick
	402284	2	Bushing / Buje / Bague	5/8" centering lip for 3/8" O.D. stud
141047	401006	1	Hex nut / Tuerca hexagonal / Écrou hexagonal	3/8" x 24 UNF thread
	401164	1	Hex nut / Tuerca hexagonal / Écrou hexagonal	1/2" x 20 UNF Thread
	401166	1	Lock washer / Arandela de seguridad / Rondelle-frein	1/2" lock washer
	401184	1	Lock washer / Arandela de seguridad / Rondelle-frein	7/16" Lock washer
	402844	1	Hex nut / Tuerca hexagonal / Écrou hexagonal	7/16" x 20 UNF Thread
	402943	1	Retainer (washer) / Seguro (arandela) / Arrêt (rondelle)	0.457" I.D. x 1.68" O.D. x .120" thick
	403298	1	Retainer (washer) / Seguro (arandela) / Arrêt (rondelle)	0.390" I.D. x 1.68" O.D. x .120" thick
	403299	2	Bushing / Buje / Bague	7/8" centering lip for 7/16" O.D. stud
	403877	1	Stud / Perno / Goujon	1/2" x 20 and 7/16" x 20
	403878	1	Washer / Arandela / Rondelle	0.453" I.D. x 1.25" O.D. x .075" thick
141083	401193	1	Lock washer / Arandela de seguridad / Rondelle-frein	5/8" I.D. (thin)
	404451	1	Hex nut / Tuerca hexagonal / Écrou hexagonal	16 x 1.5 metric thread
	404452	2	Retainer (washer) / Seguro (arandela) / Arrêt (rondelle)	5/8" I.D. x 2-3/4" O.D. x .180" thick
	404453	1	Sleeve / Camisa / Manchon	16 mm I.D. x 1-3/16" O.D. x 1-1/2" long
	404454	2	Bushing / Buje / Bague	1-3/16" centering lip for 13/16" O.D. stud
141108	401174	2	Hex nut / Tuerca hexagonal / Écrou hexagonal	5/8" x 18 thread
	405360	4	Retainer (washer) / Seguro (arandela) / Arrêt (rondelle)	5/8" I.D. x 2-3/16" O.D. x .120" thick
	405361-000	4	Bushing / Buje / Bague	1" centering lip for 5/8" O.D. stud (1.00" thick)
141137	402812	1	Sleeve / Camisa / Manchon	13 mm I.D. x 5/8 in. O.D. x 1-5/16 in. long
141138	401006	2	Hex nut / Tuerca hexagonal / Écrou hexagonal	3/8" x 24 UNF thread
	403489	4	Bushing / Buje / Bague	5/8" centering lip for 3/8" O.D. stud
	403575	4	Retainer (washer) / Seguro (arandela) / Arrêt (rondelle)	25/64" I.D. x 1-1/4" O.D. x .12" thick
	404949	4	Washer / Arandela / Rondelle	1/2" I.D. x 1-1/2" O.D. x .04" thick

MOUNTING ACCESSORY PACKAGES AND COMPONENT PARTS
KITS DE ACCESORIOS Y COMPONENTES
ENSEMBLES D'ACCESSOIRES DE MONTURES ET DE PIÈCES DÉTACHÉES

141168	401006	1	Hex nut / Tuerca hexagonal / Écrou hexagonal	3/8" x 24 UNF thread
	401008	1	Retainer (washer) / Seguro (arandela) / Arrêt (rondelle)	3/8 in. I.D. x 1-1/4 in. O.D. x .075 in. thick
	404350	1	Retainer (washer) / Seguro (arandela) / Arrêt (rondelle)	3/8 in. I.D. x 1-5/8 in. O.D. x .119 in. thick
	404985	1	Bushing / Buje / Bague	5/8" centering lip for 3/8" O.D. stud
	404986	1	Bushing / Buje / Bague	5/8" centering lip for 3/8" O.D. stud
	429680-015	1	Instruction sheet / Hoja de instr. / Feuillet d'instr.	
141247	401174	1	Hex nut / Tuerca hexagonal / Écrou hexagonal	5/8" x 18 thread
	401754	2	Bushing / Buje / Bague	EB3 - style for 2.39 in. O.D. eye ring - 1" diam. Stud
	405360	2	Retainer (washer) / Seguro (arandela) / Arrêt (rondelle)	5/8" I.D. x 2-3/16" O.D. x .120" thick
	405361	2	Bushing / Buje / Bague	1" centering lip for 5/8" O.D. stud
141349	401006	1	Hex nut / Tuerca hexagonal / Écrou hexagonal	3/8" x 24 UNF thread
	401007	1	Pal nut / Tuerca de cierre / Écrou Pal	3/8" x 24 UNF thread
	401376	2	Retainer (washer) / Seguro (arandela) / Arrêt (rondelle)	3/8 in. I.D. x 1-3/8 in. O.D. x .089 in. thick
	404652	2	Bushing / Buje / Bague	Used with 5/8" dia. hole or 7/8" dia. Hole
	429680-030	1	Instruction sheet / Hoja de instr. / Feuillet d'instr.	
141350	401006	1	Hex nut / Tuerca hexagonal / Écrou hexagonal	3/8" x 24 UNF thread
	401376	2	Retainer (washer) / Seguro (arandela) / Arrêt (rondelle)	3/8 in. I.D. x 1-3/8 in. O.D. x .089 in. thick
	402294	2	Bushing / Buje / Bague	5/8" lip for 3/8" dia. stud-5/8"or 7/8'holes
	411520	1	Jam nut / Contratuerca / Contre-Écrou	3/8" x 24 UNF thread
141353	401006	1	Hex nut / Tuerca hexagonal / Écrou hexagonal	3/8" x 24 UNF thread
	401007	1	Jam nut / Contratuerca / Contre-Écrou	3/8" x 24 UNF thread
	401383	2	Retainer (washer) / Seguro (arandela) / Arrêt (rondelle)	3/8 in. I.D. x 1-1/2 in. O.D. x .093 in. thick
	402263	2	Bushing / Buje / Bague	7/8" centering lip for 3/8" O.D. stud
141354	401006	1	Hex nut / Tuerca hexagonal / Écrou hexagonal	3/8" x 24 UNF thread
	401007	1	Pal nut / Tuerca de cierre / Écrou Pal	3/8" x 24 UNF thread
	404350	1	Retainer (washer) / Seguro (arandela) / Arrêt (rondelle)	3/8 in. I.D. x 1-5/8 in. O.D. x .119 in. thick
	404485	1	Retainer (washer) / Seguro (arandela) / Arrêt (rondelle)	0.453" I.D x 1.63" O.D x 0.120" thick
	404959	2	Bushing / Buje / Bague	3/4" centering lip for 7/16" O.D. stud
141356	401006	1	Hex nut / Tuerca hexagonal / Écrou hexagonal	3/8" x 24 UNF thread
	401007	1	Pal nut / Tuerca de cierre / Écrou Pal	3/8" x 24 UNF thread
	401008	2	Retainer (washer) / Seguro (arandela) / Arrêt (rondelle)	3/8 in. I.D. x 1-1/4 in. O.D. x .075 in. thick
	403962	2	Bushing / Buje / Bague	1/2" centering lip for 3/8" O.D. stud
141368	401006	1	Hex nut / Tuerca hexagonal / Écrou hexagonal	3/8" x 24 UNF thread
	401007	1	Jam nut / Contratuerca / Contre-Écrou	3/8" x 24 UNF thread
	401008	1	Retainer (washer) / Seguro (arandela) / Arrêt (rondelle)	3/8 in. I.D. x 1-1/4 in. O.D. x .075 in. thick
	401383	1	Retainer (washer) / Seguro (arandela) / Arrêt (rondelle)	3/8 in. I.D. x 1-1/2 in. O.D. x .093 in. thick
	403489	2	Bushing / Buje / Bague	5/8" centering lip for 3/8" O.D. stud
	429680-030	1	Instruction sheet / Hoja de instr. / Feuillet d'instr.	
141376	401006	1	Hex nut / Tuerca hexagonal / Écrou hexagonal	3/8 in.-24 thread
	401007	1	Pal nut / Tuerca de cierre / Écrou Pal	3/8" x 24 UNF thread
	401008	2	Retainer (washer) / Seguro (arandela) / Arrêt (rondelle)	3/8 in. I.D. x 1-1/4 in. O.D. x .075 in. thick
	403489	2	Bushing / Buje / Bague	5/8" centering lip for 3/8" O.D. stud
141439	401011	2	Bushing / Buje / Bague	EB2 style - for 1-3/4" O.D. eye ring - 3/4" diam. Stud
	411165	1	Lock nut / Contratuerca / Contre-Écrou	12 x 1.25 metric thread
	411445	2	Bushing / Buje / Bague	Flat Bushing for 9/16" O.D. stud
	411446	2	Retainer (washer) / Seguro (arandela) / Arrêt (rondelle)	3/4" I.D. x 1 7/8" O.D. x .047" thick
	411447	1	Retainer (washer) / Seguro (arandela) / Arrêt (rondelle)	9/16" I.D. x 1-3/4" O.D. x .087" thick
	412554	1	Retainer (washer) / Seguro (arandela) / Arrêt (rondelle)	0.485" O.D x 1.76" O.D. x .089" thick

MOUNTING ACCESSORY PACKAGES AND COMPONENT PARTS
KITS DE ACCESORIOS Y COMPONENTES
ENSEMBLES D'ACCESSOIRES DE MONTURES ET DE PIÈCES DÉTACHÉES

141448	404715	1	Spacer / Espaciador / Entretoise	0.737" I.D x 1.75" O.D. x .120 thick
	411165	1	Lock nut / Contratuerca / Contre-Écrou	12 x 1.25 metric thread
	411445	2	Bushing / Buje / Bague	Flat Bushing for 9/16" O.D. stud
	411446	1	Retainer (washer) / Seguro (arandela) / Arrêt (rondelle)	3/4" I.D. x 1 7/8" O.D. x .047" thick
	411447	1	Washer / Arandela / Rondelle	9/16" I.D. x 1-3/4" O.D. x .087" thick
	412554	1	Retainer (washer) / Seguro (arandela) / Arrêt (rondelle)	0.485" O.D x 1.76" O.D. x .089" thick
141514	401006	1	Hex nut / Tuerca hexagonal / Écrou hexagonal	3/8" x 24 UNF thread
	401007	1	Pal nut / Tuerca de cierre / Écrou Pal	3/8" x 24 UNF thread
	401383	2	Retainer (washer) / Seguro (arandela) / Arrêt (rondelle)	3/8 in. I.D. x 1-1/2 in. O.D. x .093 in. thick
	404947	2	Bushing / Buje / Bague	3/8 in. I.D. x 1-3/16 in. x 9/16 in. thick
141537	401006	1	Hex nut / Tuerca hexagonal / Écrou hexagonal	3/8" x 24 UNF thread
	404350	2	Retainer (washer) / Seguro (arandela) / Arrêt (rondelle)	3/8 in. I.D. x 1-5/8 in. O.D. x .119 in. thick
	404985	2	Bushing / Buje / Bague	5/8" centering lip for 3/8" O.D. stud
141665	401006	1	Hex nut / Tuerca hexagonal / Écrou hexagonal	3/8" x 24 UNF thread
	402943	1	Retainer (washer) / Seguro (arandela) / Arrêt (rondelle)	0.457" I.D. x 1.68" O.D. x .120" thick
	403298	1	Retainer (washer) / Seguro (arandela) / Arrêt (rondelle)	0.390" I.D. x 1.68" O.D. x .120" thick
	404959	2	Bushing / Buje / Bague	3/4" centering lip for 7/16" O.D. stud
	411520	1	Jam nut / Contratuerca / Contre-Écrou	3/8" x 24 UNF thread
142036	411497	1	Lock nut / Contratuerca / Contre-Écrou	10 x 1.25 metric thread
142069	411165	2	Lock nut / Contratuerca / Contre-Écrou	12 x 1.25 metric thread
	411447	2	Washer / Arandela / Rondelle	9/16" I.D. x 1-3/4" O.D. x .087" thick
	412103	2	Retainer (washer) / Seguro (arandela) / Arrêt (rondelle)	9/16" I.D. x 1-3/4" O.D. x 1/4" thick
	412116	4	Bushing / Buje / Bague	Flat bushing for 9/16" O.D. Stud
	412554	2	Retainer (washer) / Seguro (arandela) / Arrêt (rondelle)	0.485" O.D x 1.76" O.D. x .089" thick
142095	411165	1	Lock nut / Contratuerca / Contre-Écrou	12 x 1.25 metric thread
	411447	2	Retainer (washer) / Seguro (arandela) / Arrêt (rondelle)	9/16" I.D. x 1-3/4" O.D. x .087" thick
	412103	1	Retainer (washer) / Seguro (arandela) / Arrêt (rondelle)	9/16" I.D. x 1-3/4" O.D. x 1/4" thick
	412116	2	Bushing / Buje / Bague	Flat bushing for 9/16" O.D. Stud
142280	411633	2	Bushing / Buje / Bague	0.810" centering lip for 7/16" O.D. stud
	411672	1	Retainer (washer) / Seguro (arandela) / Arrêt (rondelle)	0.410" I.D. x 2.05" O.D. x 0.175" thick
	412046	1	Lock nut / Contratuerca / Contre-Écrou	10 x 1.5 metric thread
	412479	1	Retainer (washer) / Seguro (arandela) / Arrêt (rondelle)	0.490" I.D. x 2.15" O.D. x 0.180" thick
142389	404287	2	Retainer (washer) / Seguro (arandela) / Arrêt (rondelle)	0.453" I.D x 1.50" O.D x 0.090" thick
	404947	2	Bushing / Buje / Bague	For 3/8" O.D. stud- no centering lip
	411497	1	Lock nut / Contratuerca / Contre-Écrou	10 x 1.25 metric thread
142592	402539	2	Bolt / Tornillo / Boulon	5/16" x 24 UNF thread x 1" long
	402573	2	Nut / Tuerca / Écrou	5/16" x 24 UNF thread
	402653	2	Lock washer / Arandela de seguridad / Rondelle-frein	5/16" Lock washer
	411385	2	Retainer (washer) / Seguro (arandela) / Arrêt (rondelle)	0.355" I.D x 0.74" O.D. x 0.075" thick
142615	401006	1	Hex nut / Tuerca hexagonal / Écrou hexagonal	3/8" x 24 UNF thread
	401376	1	Retainer (washer) / Seguro (arandela) / Arrêt (rondelle)	3/8 in. I.D. x 1-3/8 in. O.D. x .089 in. thick
	402943	1	Retainer (washer) / Seguro (arandela) / Arrêt (rondelle)	0.457" I.D. x 1.68" O.D. x .120" thick
	404652	2	Bushing / Buje / Bague	Used with 5/8" dia. hole or 7/8" dia. Hole
142617	401006	1	Hex nut / Tuerca hexagonal / Écrou hexagonal	3/8" x 24 UNF thread
	402943	1	Retainer (washer) / Seguro (arandela) / Arrêt (rondelle)	0.457" I.D. x 1.68" O.D. x .120" thick
	403298	1	Retainer (washer) / Seguro (arandela) / Arrêt (rondelle)	0.390" I.D. x 1.68" O.D. x .120" thick
	412661	2	Bushing / Buje / Bague	0.790" centering lip for 7/16" O.D. stud

MOUNTING ACCESSORY PACKAGES AND COMPONENT PARTS
KITS DE ACCESORIOS Y COMPONENTES
ENSEMBLES D'ACCESSOIRES DE MONTURES ET DE PIÈCES DÉTACHÉES

142656	411165	1	Lock nut / Contratuerca / Contre-Écrou	12 x 1.25 metric thread
	411446	1	Retainer (washer) / Seguro (arandela) / Arrêt (rondelle)	3/4" I.D. x 1 7/8" O.D. x .047" thick
	411447	1	Retainer (washer) / Seguro (arandela) / Arrêt (rondelle)	9/16" I.D. x 1-3/4" O.D. x .087" thick
	412103	1	Retainer (washer) / Seguro (arandela) / Arrêt (rondelle)	9/16" I.D. x 1-3/4" O.D. x 1/4" thick
	412116	2	Bushing / Buje / Bague	Flat bushing for 9/16" O.D. Stud
	412554	1	Retainer (washer) / Seguro (arandela) / Arrêt (rondelle)	0.485" O.D x 1.76" O.D. x .089" thick
142657	411165	2	Lock nut / Contratuerca / Contre-Écrou	12 x 1.25 metric thread
	411446	2	Retainer (washer) / Seguro (arandela) / Arrêt (rondelle)	3/4" I.D. x 1 7/8" O.D. x .047" thick
	411447	2	Retainer (washer) / Seguro (arandela) / Arrêt (rondelle)	9/16" I.D. x 1-3/4" O.D. x .087" thick
	412103	2	Retainer (washer) / Seguro (arandela) / Arrêt (rondelle)	9/16" I.D. x 1-3/4" O.D. x 1/4" thick
	412116	4	Bushing / Buje / Bague	Flat bushing for 9/16" O.D. Stud
	412554	2	Retainer (washer) / Seguro (arandela) / Arrêt (rondelle)	0.485" O.D x 1.76" O.D. x .089" thick
142700	401006	1	Hex nut / Tuerca hexagonal / Écrou hexagonal	3/8" x 24 UNF thread
	402943	1	Retainer (washer) / Seguro (arandela) / Arrêt (rondelle)	0.457" I.D. x 1.68" O.D. x .120" thick
	403298	1	Retainer (washer) / Seguro (arandela) / Arrêt (rondelle)	0.390" I.D. x 1.68" O.D. x .120" thick
	404959	2	Bushing / Buje / Bague	3/4" centering lip for 7/16" O.D. stud
	411520	1	Jam nut / Contratuerca / Contre-Écrou	3/8" x 24 UNF thread
	412682	1	Sleeve / Camisa / Manchon	0.479" I.D. x 0.548" O.D. x 1.48" long
	429680-008	1	Instruction sheet / Hoja de instr. / Feuillet d'instr.	
142731	411165	1	Lock nut / Contratuerca / Contre-Écrou	12 x 1.25 metric thread
	411447	1	Retainer (washer) / Seguro (arandela) / Arrêt (rondelle)	9/16" I.D. x 1-3/4" O.D. x .087" thick
	412554	1	Retainer (washer) / Seguro (arandela) / Arrêt (rondelle)	0.485" O.D x 1.76" O.D. x .089" thick
	412675	2	Bushing / Buje / Bague	0.950" centering lip for 9/16" O.D. stud
142973	411633	2	Bushing / Buje / Bague	0.810" centering lip for 7/16" O.D. stud
	411672	1	Retainer (washer) / Seguro (arandela) / Arrêt (rondelle)	0.410" I.D. x 2.05" O.D. x 0.175" thick
	412046	1	Lock nut / Contratuerca / Contre-Écrou	10 x 1.5 metric thread
	412479	1	Retainer (washer) / Seguro (arandela) / Arrêt (rondelle)	0.490" I.D. x 2.15" O.D. x 0.180" thick
142976	401174	1	Hex nut / Tuerca hexagonal / Écrou hexagonal	5/8" x 18 thread
	405360	2	Retainer (washer) / Seguro (arandela) / Arrêt (rondelle)	5/8" I.D. x 2-3/16" O.D. x .120" thick
	405361-000	2	Bushing / Buje / Bague	1" centering lip for 5/8" O.D. stud (1.00" thick)
	429680-031	1	Instruction sheet / Hoja de instr. / Feuillet d'instr.	
142998	404452	2	Retainer (washer) / Seguro (arandela) / Arrêt (rondelle)	5/8" I.D. x 2-3/4" O.D. x .180" thick
	404454	2	Bushing / Buje / Bague	1-3/16" centering lip for 13/16" O.D. stud
	405862	1	Self locking nut / Tuerca de seguridad / Écrou indesserrable	5/8" x 18 thread
	412872	1	Sleeve / Camisa / Manchon	0.643" I.D. x .815" O.D. x 1.44" long
143000	404695	1	Retainer (washer) / Seguro (arandela) / Arrêt (rondelle)	0.709" centering lip x 1.97" O.D. x .060" thick
	404715	1	Spacer / Espaciador / Entretoise	0.737" I.D x 1.75" O.D. x .120 thick
	411165	1	Lock nut / Contratuerca / Contre-Écrou	12 x 1.25 metric thread
	411447	1	Retainer (washer) / Seguro (arandela) / Arrêt (rondelle)	9/16" I.D. x 1-3/4" O.D. x .087" thick
	412116	2	Bushing / Buje / Bague	Flat bushing for 9/16" O.D. Stud
	412554	1	Retainer (washer) / Seguro (arandela) / Arrêt (rondelle)	0.485" O.D x 1.76" O.D. x .089" thick
	429680-033	1	Instruction sheet / Hoja de instr. / Feuillet d'instr.	
143078	401006	1	Hex nut / Tuerca hexagonal / Écrou hexagonal	3/8" x 24 UNF thread
	404969	1	Sleeve / Camisa / Manchon	0.400" I.D. x .620" O.D. x 1.48" long
	412554	2	Retainer (washer) / Seguro (arandela) / Arrêt (rondelle)	0.485" O.D x 1.76" O.D. x .089" thick
	412675	2	Bushing / Buje / Bague	0.950" centering lip for 9/16" O.D. stud
143146	411165	1	Lock nut / Contratuerca / Contre-Écrou	12 x 1.25 metric thread
	411447	2	Retainer (washer) / Seguro (arandela) / Arrêt (rondelle)	9/16" I.D. x 1-3/4" O.D. x .087" thick
	412675	2	Bushing / Buje / Bague	0.950" centering lip for 9/16" O.D. stud

MOUNTING ACCESSORY PACKAGES AND COMPONENT PARTS
KITS DE ACCESORIOS Y COMPONENTES
ENSEMBLES D'ACCESSOIRES DE MONTURES ET DE PIÈCES DÉTACHÉES

145054	401174	1	Hex nut / Tuerca hexagonal / Écrou hexagonal	5/8 in. -18 thread
	401175	1	Lock washer / Arandela de seguridad / Rondelle-frein	
	405360	2	Retainer (washer) / Seguro (arandela) / Arrêt (rondelle)	5/8" I.D. x 2-3/16" O.D. x .120" thick
	405361-000	2	Bushing / Buje / Bague	1" centering lip for 5/8" O.D. stud (1.00" thick)
145075	401750	1	Retainer (washer) / Seguro (arandela) / Arrêt (rondelle)	3/4" I.D. x 2-3/8" O.D. x .105" thick
	401752	1	Retainer (washer) / Seguro (arandela) / Arrêt (rondelle)	1" I.D. x 2-3/8" O.D. x .105" thick
	401754	2	Bushing / Buje / Bague	EB3 - style for 2.39 in. O.D. eye ring - 1" diam. Stud
	405360	2	Retainer (washer) / Seguro (arandela) / Arrêt (rondelle)	5/8" I.D. x 2-3/16" O.D. x .120" thick
	405361-000	2	Bushing / Buje / Bague	1" centering lip for 5/8" O.D. stud (1.00" thick)
145080	401011	2	Bushing / Buje / Bague	EB2 style - for 1-3/4" O.D. eye ring - 3/4" diam. Stud
	401429	1	Retainer (washer) / Seguro (arandela) / Arrêt (rondelle)	1/2" I.D. x 1-5/8" O.D. x .090" thick
	401430	1	Retainer (washer) / Seguro (arandela) / Arrêt (rondelle)	3/4" I.D. x 1-5/8" O.D. x .090" thick
145089-000	405360	2	Retainer (washer) / Seguro (arandela) / Arrêt (rondelle)	5/8" I.D. x 2-3/16" O.D. x .120" thick
	405361-000	2	Bushing / Buje / Bague	1" centering lip for 5/8" O.D. stud (1.00" thick)
	405862	1	Self locking nut / Tuerca de seguridad / Écrou indesserrable	5/8" x 18 thread
145089-200	405360	2	Retainer (washer) / Seguro (arandela) / Arrêt (rondelle)	5/8" I.D. x 2-3/16" O.D. x .120" thick
	405361-100	2	Bushing / Buje / Bague	1" centering lip for 5/8" O.D. stud (0.75" thick)
	415196-001	1	Nylon lock nut / Contratuerca / Contre-Écrou	5/8" x 18 thread
145090	405643	1	Sleeve / Camisa / Manchon	0.645" I.D x 0.810" O.D. x 2.00" long
	405859	2	Bushing / Buje / Bague	0.815" I.D. x 2.35" O.D x 1.05" thick with 1.15" centering lip
	405860	2	Retainer (washer) / Seguro (arandela) / Arrêt (rondelle)	0.650" I.D. x 2.75" O.D. x .180" thick
	405862	1	Self locking nut / Tuerca de seguridad / Écrou indesserrable	5/8" x 18 thread
	424276	1	Instruction sheet / Hoja de instr. / Feuillet d'instr.	
145093	401750	2	Retainer (washer) / Seguro (arandela) / Arrêt (rondelle)	3/4" I.D. x 2-3/8" O.D. x .105" thick
	401752	2	Retainer (washer) / Seguro (arandela) / Arrêt (rondelle)	1" I.D. x 2-3/8" O.D. x .105" thick
	401754	4	Bushing / Buje / Bague	EB3 - style for 2.39 in. O.D. eye ring - 1" diam. Stud
145099	401174	1	Hex nut / Tuerca hexagonal / Écrou hexagonal	5/8" x 18 thread
	401175	1	Lock washer / Arandela de seguridad / Rondelle-frein	
	401754	2	Bushing / Buje / Bague	EB3 - style for 2.39 in. O.D. eye ring - 1" diam. Stud
	405360	2	Retainer (washer) / Seguro (arandela) / Arrêt (rondelle)	5/8" I.D. x 2-3/16" O.D. x .120" thick
	405361-000	2	Bushing / Buje / Bague	1" centering lip for 5/8" O.D. stud (1.00" thick)
	424274	1	Instruction sheet / Hoja de instr. / Feuillet d'instr.	
145112	401164	1	Hex nut / Tuerca hexagonal / Écrou hexagonal	1/2" x 20 UNF Thread
	401165	1	Lock washer / Arandela de seguridad / Rondelle-frein	1/2" lock washer
	405360	1	Retainer (washer) / Seguro (arandela) / Arrêt (rondelle)	5/8" I.D. x 2-3/16" O.D. x .120" thick
	405361-000	2	Bushing / Buje / Bague	1" centering lip for 5/8" O.D. stud (1.00" thick)
	405934	1	Retainer (washer) / Seguro (arandela) / Arrêt (rondelle)	0.530" I.D. x 2-3/16" O.D. x .120" thick
145116	401750	1	Retainer (washer) / Seguro (arandela) / Arrêt (rondelle)	3/4" I.D. x 2-3/8" O.D. x .105" thick
	401752	1	Retainer (washer) / Seguro (arandela) / Arrêt (rondelle)	1" I.D. x 2-3/8" O.D. x .105" thick
	415169	2	Bushing / Buje / Bague (Durometer 80)	EB3 - style for 2.39 in. O.D. eye ring - 1" diam. Stud
145123	405360	2	Retainer (washer) / Seguro (arandela) / Arrêt (rondelle)	5/8" I.D. x 2-3/16" O.D. x .120" thick
	405862	1	Self locking nut / Tuerca de seguridad / Écrou indesserrable	5/8" x 18 thread
	415017-001	2	Bushing / Buje / Bague	1" centering lip for a 5/8" O.D. stud
145126	401750	2	Retainer (washer) / Seguro (arandela) / Arrêt (rondelle)	3/4" I.D. x 2-3/8" O.D. x .105" thick
	401754	2	Bushing / Buje / Bague	EB3 - style for 2.39 in. O.D. eye ring - 1" diam. Stud
	403752	1	Sleeve / Camisa / Manchon	3/4" I.D. x 15/16" O.D. x 1-3/4" long
	415277	1	Spacer / Espaciador / Entretoise	1-3/16" I.D. x 1-1/4" O.D. x .200" thick
	424281	1	Instruction sheet / Hoja de instr. / Feuillet d'instr.	

MOUNTING ACCESSORY PACKAGES AND COMPONENT PARTS
KITS DE ACCESORIOS Y COMPONENTES
ENSEMBLES D'ACCESSOIRES DE MONTURES ET DE PIÈCES DÉTACHÉES

145128	405360	2	Retainer (washer) / Seguro (arandela) / Arrêt (rondelle)	5/8" I.D. x 2-3/16" O.D. x .120" thick
	405361-000	2	Bushing / Buje / Bague	1" centering lip for 5/8" O.D. stud (1.00" thick)
	415196-001	1	Nylon lock nut / Contratuerca / Contre-Écrou	5/8" x 18 thread
145132	415305-000	2	Rubber spacer / Espaciador de goma / Entretoise de caout.	0.910" I.D. x 1.58" O.D. x 1.1" long
	415305-001	2	Rubber spacer / Espaciador de goma / Entretoise de caout.	0.910" I.D. x 1.58" O.D. x 0.427" long
	424282	1	Instruction sheet / Hoja de instr. / Feuillet d'instr.	
145140	405360	2	Retainer (washer) / Seguro (arandela) / Arrêt (rondelle)	5/8" I.D. x 2-3/16" O.D. x .120" thick
	405862	1	Self locking nut / Tuerca de seguridad / Écrou indesserrable	5/8" x 18 thread
	415326-001	2	Urethane bushing / Buje de uretano / Bague urÉthane	1" centering lip for 5/8" O.D. stud (replacing Bushing P/N 415017)
145143	415305-001	2	Rubber spacer / Espaciador de goma / Entretoise de caout.	0.910" I.D. x 1.58" O.D. x 0.427" long
	424284	1	Instruction sheet / Hoja de instr. / Feuillet d'instr.	
145144	415305-000	2	Rubber spacer / Espaciador de goma / Entretoise de caout.	0.910" I.D. x 1.58" O.D. x 1.1" long
	424284	1	Instruction sheet / Hoja de instr. / Feuillet d'instr.	
145147	401429	1	Retainer (washer) / Seguro (arandela) / Arrêt (rondelle)	1/2" I.D. x 1-5/8" O.D. x .090" thick
	401430	1	Retainer (washer) / Seguro (arandela) / Arrêt (rondelle)	3/4" I.D. x 1-5/8" O.D. x .090" thick
145148	401750	1	Retainer (washer) / Seguro (arandela) / Arrêt (rondelle)	3/4" I.D. x 2-3/8" O.D. x .105" thick
	401752	1	Retainer (washer) / Seguro (arandela) / Arrêt (rondelle)	1" I.D. x 2-3/8" O.D. x .105" thick
145149	401265	1	Retainer (washer) / Seguro (arandela) / Arrêt (rondelle)	1/2" I.D. x 1-1/4" O.D. x .075" thick
	401266	1	Retainer (washer) / Seguro (arandela) / Arrêt (rondelle)	5/8" I.D. x 1-1/4" O.D. x .075" thick
145168	405643-100	1	Sleeve / Camisa / Manchon	0.645" I.D x 0.810" O.D. x 1.50" long
	405859-100	2	Bushing / Buje / Bague	0.815" I.D. x 2.35" O.D x 0.800" thick with 1.15" centering lip
	405860	2	Retainer (washer) / Seguro (arandela) / Arrêt (rondelle)	0.650" I.D. x 2.75" O.D. x .180" thick
	405862	1	Self locking nut / Tuerca de seguridad / Écrou indesserrable	5/8" x 18 thread
	424276	1	Instruction sheet / Hoja de instr. / Feuillet d'instr.	
145177	401754	2	Bushing / Buje / Bague	EB3 - style for 2.39 in. O.D. eye ring - 1" diam. Stud
	406422-000	2	Retainer (washer) / Seguro (arandela) / Arrêt (rondelle)	22 mm I.D. x 60.2 mm O.D. x 2.7 mm thick
	415010-802	1	Sleeve / Camisa / Manchon	22 mm I.D. x 1.00" O.D. x 1-3/4" long
	424296-000	1	Instruction sheet / Hoja de instr. / Feuillet d'instr.	
401011		1	Bushing / Buje / Bague	EB2 style - for 1-3/4" O.D. eye ring - 3/4" diam. Stud - Replaced by TR0027
401754		1	Bushing / Buje / Bague	EB3 - style for 2.39 in. O.D. eye ring - 1" diam. Stud
404702		1	Bushing / Buje / Bague	EB1 style - 1 pc Spool shaped bushing (5/8" I.D.)
405360		1	Retainer (washer) / Seguro (arandela) / Arrêt (rondelle)	5/8" I.D. x 2-3/16" O.D. x .120" thick
405361-000		1	Bushing / Buje / Bague	1" centering lip for 5/8" O.D. stud (1.00" thick)
406422		1	Retainer (washer) / Seguro (arandela) / Arrêt (rondelle)	22 mm I.D. x 60.2 mm O.D. x 2.7 mm thick
415010-802		1	Sleeve / Camisa / Manchon	22 mm I.D. x 1.00" O.D. x 1-3/4" long
415015-001		1	Urethane bushing / Buje de uretano / Bague urÉthane	EB3 - style for 2.39 in. O.D. eye ring - 1" diam. Stud
415017		1	Urethane bushing / Buje de uretano / Bague urÉthane	1" centering lip for 5/8" O.D. stud
415025-001		1	Urethane bushing / Buje de uretano / Bague urÉthane	EB2 style for 1-3/4" O.D. eye ring - 3/4" diam. Stud
415326-001		1	Urethane bushing / Buje de uretano / Bague urÉthane	1" centering lip for 5/8" O.D. stud (replacing Bushing P/N 415017)
TR0027		1	Bushing / Buje / Bague	EB2 style - for 1-3/4" O.D. eye ring - 3/4" diam. Stud - (Replaces 401011)

MOUNTING ACCESSORY PACKAGES - BUYER'S GUIDE
KITS DE ACCESORIOS – GUÍA DEL COMPRADOR
ENSEMBLE D'ACCESSOIRES POUR LA FIXATION - GUIDE DE L'ACHETEUR

Kit #	Gabriel #
140126	83027
	G63350
	G63359
	G63360
	G63387
	G63457
	G63881
140149	83200
	83216
	83219
	83308
	83309
	83312
	83314
	85023
	85024
	85046
	85047
	89401
	89402
	89403
	89409
	89415
	89416
	89434
	89435
	G63494
	G63510
140169	85025
	G63432
	G63605
	G63616
	G63708
140357	G63349
	G63438
140455	83003
	83005
	83014
	83015
	83400
	G63421
	G63798
	G63860

Kit #	Gabriel #
	G63862
	G63950
140524	83161
	G63479
	G63484
	G63491
	G63611
	G63635
140673	G63900
	G63937
140702	83007
	83303
	83304
	G63355
	G63394
	G63625
140719	G63607
	G63679
140780	83018
	83019
	83041
	83045
	83050
	83058
	83105
	83114
	83162
	83177
	G63386
	G63396
	G63414
	G63416
	G63445
	G63447
	G63500
	G63603
	G63608
	G63614
	G63621
	G63624
	G63929
140857	G63902

Kit #	Gabriel #
140884	G63405
140885	G63299
140921	G63548
	G63726
141041	83515
	83518
	G63444
	G63889
	G64004
	G64005
	G64006
	G64007
141047	G63410
	G63446
141083	83301
	83317
	83318
	83613
141108	85310
	89423
	89447
	89455
141137	G63377
	G63492
	G63712
141138	G63187
	G63398
141247	85311
	85312
	85317
	85703
	87000
	89424
141277	G63489
143146	85649
141349	G63404
	G63432
141350	G63495
	G63547
	G63781
	G63782
141353	G63424

MOUNTING ACCESSORY PACKAGES - BUYER'S GUIDE
KITS DE ACCESORIOS – GUÍA DEL COMPRADOR
ENSEMBLE D'ACCESSOIRES POUR LA FIXATION - GUIDE DE L'ACHETEUR

Kit #	Gabriel #
	G63511
	G63847
141354	G63707
141356	G63418
	G63904
141368	G63909
141376	G63903
141405	G63620
141439	G63434
141448	G63506
	G63694
141514	G63799
141665	G63721
	G63772
	G63783
	G63803
	G63817
142036	G63884
142095	83178
142280	G63885
142389	G63610
	G63865
142592	G63847
142615	G63375
142617	G63622
	G63623
142656	G63616
142657	G63615
142700	G63715
	G63778
142731	G63674
	G63714
	G63716
	G63848
	G63886
	G64009
	G64011
142973	G64008
142976	G63828
	G63832
142998	83456
143000	G63661
	G63673
143078	G63894

Kit #	Gabriel #
	G63895
	G63958
	G64001
143146	85649
	G63969
143276	G63893
	G63894
	G63895
145054	83103
	83106
	83134
	83136
	83395
	83635
	85009
	85025
	85026
	85027
	85049
	85071
	85080
	85085
	85092
	85124
	85126
	85318
	85324
	85325
	85326
	85328
	85330
	85336
	85342
	85379
	85701
	85710
	85711
	85731
	85900
	85902
	85921
	89417
	89418
	89441

Kit #	Gabriel #
145075	85723
145080	83107
	85012
	85054
	85055
	85062
	85063
	89408
	89413
	89438
	89439
145089-000	83102
	83120
	83154
	85069
	85122
	85319
	85340
	85341
	85343
	85733
	85970
	89428
145089-200	85182
	85936
	85937
	85985
	89456
145090	87016
	695406
	85081
	85123
	85316
	85346
	85347
	85351
	85380
	85705
	85706
	85707
	85708
	85709
	85722
	85740

MOUNTING ACCESSORY PACKAGES - BUYER'S GUIDE
KITS DE ACCESORIOS – GUÍA DEL COMPRADOR
ENSEMBLE D'ACCESSOIRES POUR LA FIXATION - GUIDE DE L'ACHETEUR

Kit #	Gabriel #
	85745
	85746
	85935
	89426
145093	85714
	85715
	85716
	85717
	85718
	85719
145099	83353
	85033
	85988
	89427
145116	83162
	85732
	87016
145126	85053
	89442
145128	83062
	83109
	83110
	83111
	83112
	83138
	83142
	83143
	85065
	85083
	85332
	85333
	85977
145143	83120
145147	85031
145148	83140
	83141
145176	85727
	85728
	85729
145177	83391
401754	85343
	85380
	85740

Kit #	Gabriel #
	83132
	83214
	83215
	83217
	83225
	83362
	85001
	85004
	85007
	85040
	85042
	85057
	85070
	85300
	85301
	85302
	85303
	85304
	85305
	85307
	85308
	85313
	85314
	85315
	85320
	85322
	85327
	85329
	85334
	85339
	85376
	85700
	85702
	85703
	85704
	85710
	85711
	85712
	85713
	85720
	85729
	85730
	85731

Kit #	Gabriel #
	85734
	85735
	85736
	85901
	85905
	85912
	85913
	85915
	85968
	87001
	87002
	87003
	87004
	87006
	89410
	89412
	89419
	89420
	89422
	89425
	89429
	89459
406422	83162
415010-802	83140
	83141
	83162
TR0027	83159
	83404
	83518
	83519
	85031
	89446

QUESTIONS ANSWERED.

800.999.3903 | ANSWERGARAGE.COM

ANSWER GARAGE®

Gabriel® HD
THE ORIGINAL

Ride Control Answer Garage/Tech Line:

800.999.3903

For application, technical and product questions
Monday - Friday, 8AM - 5PM CT

Gabriel Customer Service:

800.251.5932

To place and track orders
Monday - Friday, 7AM - 5PM CT

Check out our Training Videos:

How to Check for Worn Shocks

Installation Tips

How to Maximize Tire Life

Misting vs. Leaking Shocks

FleetLine® Key Advantages

FIND MORE AT GABRIEL.COM

part lookup, product info, technical help & training

Ride Control, LLC, 39300 Country Club Dr.
Farmington Hills, MI 48331, 248.247.7600

© 2023 Ride Control, LLC